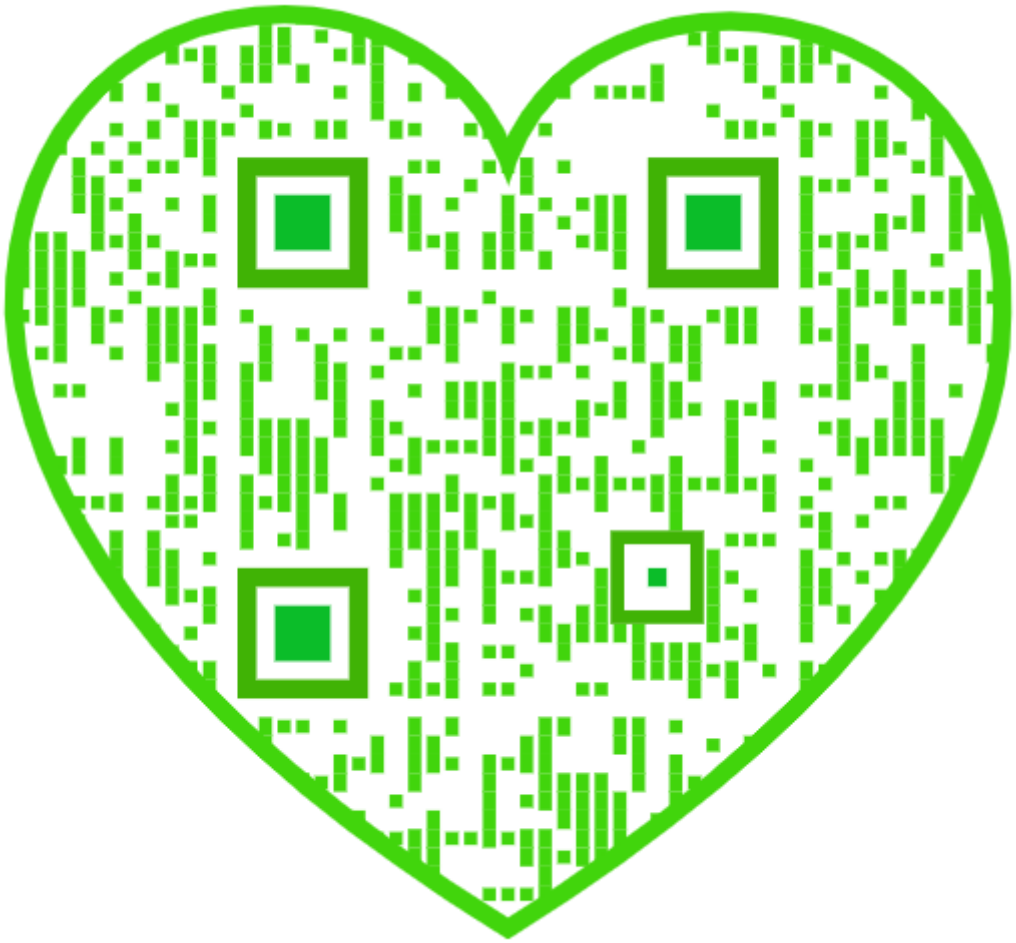

Cyclopedia of Locomotive Engineering

WITH EXAMINATION QUESTIONS AND ANSWERS

A Practical Manual on the Construction, Care and Management of Modern Locomotives, Including Boiler Construction, Valves and Valve Gears, Indicators, Locomotive Equipments, Including Headlights and Mechanical Stokers. Special Chapters on the Air Brake

By

CALVIN F. SWINGLE, M.E.

ILLUSTRATED

CHICAGO
FREDERICK J. DRAKE & CO.
Published Expressly for SEARS, ROEBUCK & CO.
1919

Copyright 1916
By
FREDERICK J. DRAKE & CO.

Copyright 1913
By
FREDERICK J. DRAKE & CO.

Copyright 1911
By
FREDERICK J. DRAKE

Copyright 1905
By
FREDERICK J. DRAKE & CO.

INTRODUCTION

The young man who starts on his business career by looking for an easy job is not likely to ever have, or at least to hold, any position of great responsibility for a very long period of time. To many unthinking persons the job of a locomotive engineer appears to be a soft snap. They do not realize the tremendous responsibility resting upon the shoulders of this man, who, by years of hard work and study combined, has finally succeeded in gaining the knowledge and experience required to enable him to guide his powerful machine safely over its route. It is universally conceded that there is no one machine that has done more towards the civilization and advancement of mankind generally, than has the locomotive, and it is a worthy ambition of any young man to aspire to be a locomotive engineer. But if he desires to make a success of it he should remember that there is work to do—lots of it—brain work as well as hand work. In the following pages the author has adopted a style somewhat different from the majority of books intended for the use of locomotive engineers and firemen.

The primary or elementary features pertaining to the operation of locomotives will be first taken up, and the discussion will gradually progress through all the various stages in the making of a first-class engineer. A large number of books for engine men are gotten up in the form of a catechism, the answers immediately following the questions. The author believes that the catechetical form is not so helpful as that of having a list of questions, but no answers, arranged at the close

398368

of each chapter. The student is thus constrained to search for the answers, which will always be found in the preceding chapter, and he will thus have the matter more firmly fixed in his mind than he would if he has the answers ready made for him.

And now with the earnest and sincere hope that the book may prove to be of great benefit to all into whose hands it may come, the author respectfully dedicates it to the locomotive engineers and firemen of America

C. F. S.

AMERICAN LOCOMOTIVE COMPANY

ENGINEERING DEPARTMENT

CLASSIFICATION OF LOCOMOTIVES

(WHYTE'S SYSTEM)

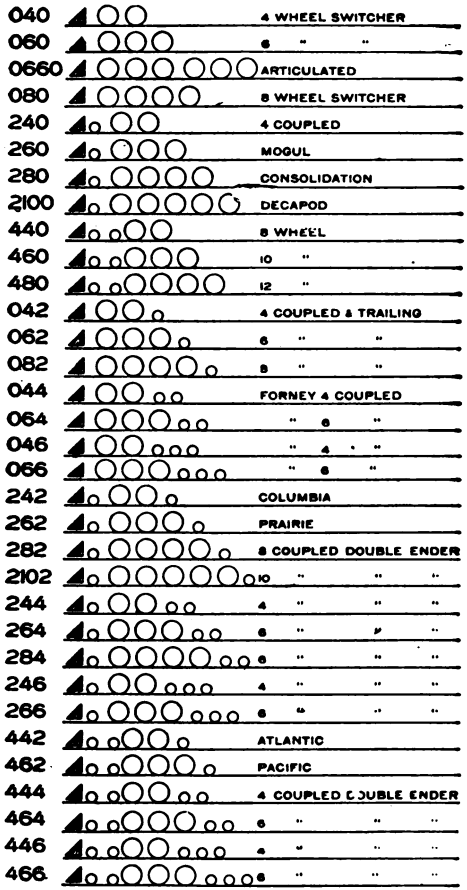

The locomotive classification adopted by the American Locomotive Company is based on the representation by numerals of the number and arrangement of the wheels commencing at the front. Thus 260 means a Mogul and 460 a ten wheel engine, the cipher denoting that no trailing truck is used.

The total weight is expressed in 1,000 of pounds. Thus an Atlantic locomotive weighing 176,000 pounds would be classified as a 442-176 type. If the engine is Compound the letter C should be substituted for the dash thus 442 C 176. If tanks are used in place of a separate tender the letter T should be used in place of the dash. Thus a double end suburban locomotive with two wheeled leading truck, six drivers and six wheeled rear truck, weighing 214,000 pounds, would be a 266 T 214 type.

CHAPTER I

FIREMAN'S DUTIES

One of the most important duties of a fireman is to form the habit of being "on time," if possible. He should be on his engine at least thirty minutes before the engine leaves the house. He will then have time to get everything in good shape.

First see that the water supply is right, then the coal wet down, cab swept out and windows cleaned, oil cans all filled and in their places, and lamps cleaned and filled with oil. He should also be sure that all needed supplies, such as flags, lanterns, torpedoes, waste, etc., are on hand, and of the right kind.

Another important point, and one in which he is particularly interested, is that the engine is supplied with the proper fire tools—clinker bar, ash pan hoe, slice bar, and such other tools as are needed for the proper manipulation of a fire.

It is the duty of the roundhouse men to see that the sand-box is filled with clean, dry sand, but it is well enough for the fireman to have an eye to that also.

For the beginner, especially, there are a great many details to be learned, and he should get in touch with the engineer as soon as possible and keep in touch with him. In fact, the engineer and fireman should always work together, and strive to be of mutual help to each other in every possible way.

After getting the engine out of the roundhouse and before starting to take her around to the train, he should note carefully that all the switches that he will pass are properly lined up and that the track is clear.

The engine bell should always be rung before starting, and be kept ringing while the engine is moving through the yards. Before starting from a terminal station the fireman should carefully prepare his fire—see that it is burning brightly and that it is heavy enough to prevent the exhaust from pulling it out of the fire-box when starting out. The depth of fire that should be carried on the grate bars depends upon the kind of fuel to be used. If soft coal is the fuel, a fire ten to twelve inches deep should be carried. If hard coal is used, the fire should not be so deep.

Before leaving a terminal the fireman should carefully read the train orders and be certain that he understands them thoroughly. Out on the road he should use his eyes in watching the steam gauge and water glass, also try to familiarize himself with the grades and hills. Some engines steam better with the fire a little deeper along the sides and in the corners of the fire-box, allowing the center of the fire to be more shallow. If there is a brick arch or a water table in the fire-box, care should be taken that plenty of space be maintained between it and the fire. At the beginning of the run the fire is clean, and may be kept a little deeper without danger of clogging.

While the engineer is pulling out of a station and working her up to speed, the fireman should watch his fire closely and keep adding a good supply of coal, as there is danger of the fire being broken by the sharp, heavy exhaust. After a good rate of speed has been attained and the engineer has hooked his reverse lever back, the coal should be added to the fire often and in small quantities at a time, two scoopfuls at each fire being sufficient, always waiting until the black smoke emitted from the stack disappears or at least changes

to a light gray color before throwing in a fresh fire, and then placing the coal in the brightest spots. If the train is light, one shovelful at a fire is enough. No set of rules for firing can be laid down that will apply to all conditions. The best rule, especially for a man new in the service, is to always be ready to receive suggestions from the engineer, who has passed through all the various phases of a fireman's apprenticeship and knows, or at least ought to know, his engine thoroughly and how to get the best service out of her. Therefore the fireman should always work under the instructions of the engineer; in fact, never do anything while on duty without first knowing that it would meet with his approval.

Care should be exercised in the regulation of the ash pan dampers for admitting air under the grates. The fireman should study closely the requirements of his fire in this respect. If too small a volume of air is admitted the fire will not burn as lively as it should, and if too much air enters the fire-box the gases will be chilled. Keep the ash pan clean and the grates will last longer.

As the exhaust is the life breath of the locomotive, it might be well at this point to explain why it creates such a tremendous draft. The reason is, because of the volume and velocity of the steam as it issues from the exhaust nozzles. The air and gases in the stack are carried out or forced out of the stack by the exhaust, and this creates a partial vacuum in the smoke arch, into which the air and gases pass from the fire-box through the flues. Fresh air is also being forced into the fire-box through the grates and other apertures by the atmospheric pressure. The blower operates upon the same principle, although on a much smaller scale.

It may be used to urge the fire when the engine is not working steam. The blower should also be used while cleaning the fire; it will clear the dust and ashes from the flues. If the engine is pulling a passenger train and the engineer is about to make a stop at a station, the fireman should, as soon as the throttle is closed,

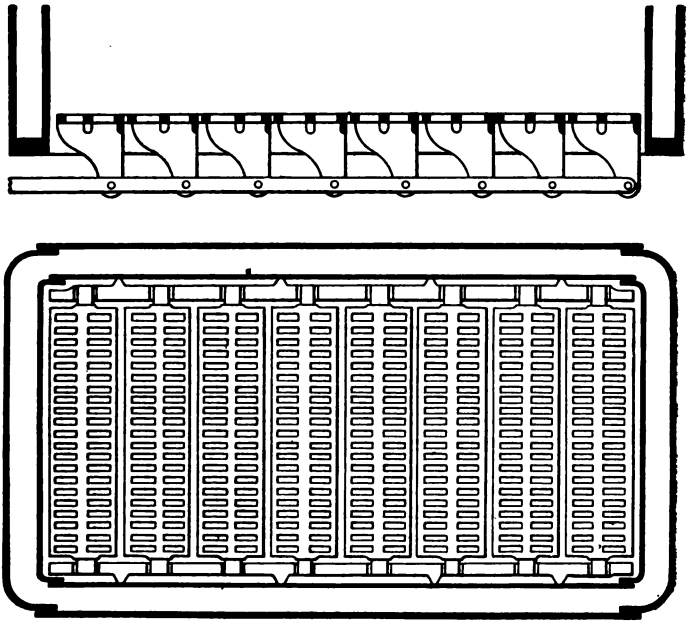

FIGURE 1

put on the blower lightly and open the fire door one-half inch, just sufficient to allow a small volume of air to enter the fire-box above the fire. This will prevent the engine from throwing out a great volume of dense black smoke while making the stop.

As the grate bars are a part of the engine with which

the fireman is particularly interested, a brief description of the various types will be here given. The old-fashioned grate bars for burning wood are too familiar to need describing, being simply plain cast iron stationary bars with narrow slots between them. For soft coal various styles of rocking grates are used. Figs. 1 and 2 show plan and sectional views of rocking grates. The method of shaking is also illustrated in Fig. 2, together with the dump grate at the front to be

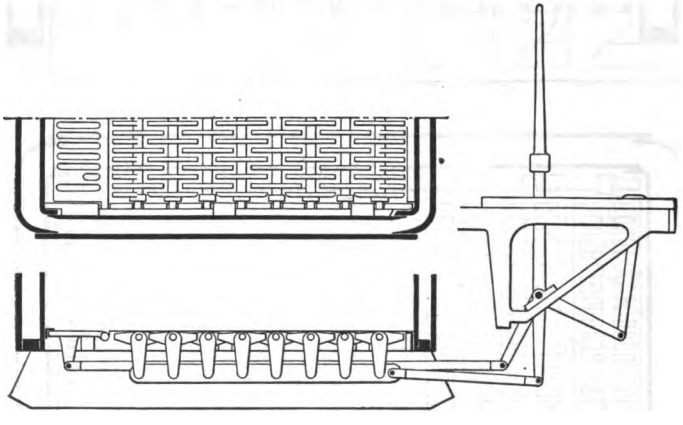

FIGURE 2

used when cleaning the fire. For burning hard coal a larger grate area is required than with soft coal, for the reason that a hard coal fire must be kept more shallow than a soft coal fire. The grate for hard coal is long, and instead of being made of cast iron it consists of horizontal wrought iron water tubes in connection with the water space, thus permitting a free circulation of water through them. This plan not only prevents the grates from burning out, but it also

serves to utilize a portion of heat that would otherwise be wasted.

Fig. 3 shows a plan and Fig. 4 an elevation of a set of water grates. Provision is made for drawing or cleaning the fire, by making every fourth or fifth tube solid and allowing it to project clear through both walls of the back end of the fire-box through thimbles inserted for that purpose. These solid tubes have rings on their back ends by which they may be withdrawn, and the front end rests upon a bearing bar.

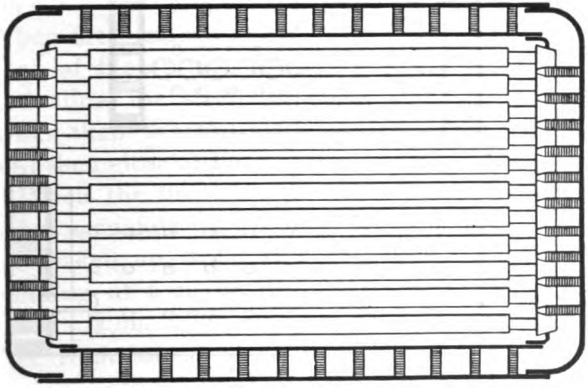

FIGURE 3

The tubes of a water grate are made water-tight by being caulked into the inside sheet at the front and back ends of the fire-box.

About twenty square feet of grate surface is needed to burn one ton of soft coal per hour.

As the steam gauge is an instrument that is particularly interesting to the fireman, it is fitting that a short description of it be inserted here. There are different types of steam gauges in use, but the one most com-

monly used, and which no doubt is the most reliable, is known as the Bourdon spring gauge. This gauge consists of a thin, curved, flattened metallic tube, closed at both ends and connected to the steam space of the boiler by a small pipe, bent at some portion of its length into a curve or circle that becomes filled with water of condensation, and thus prevents the hot live steam from coming directly in contact with the spring, while at the same time the full pressure of steam in

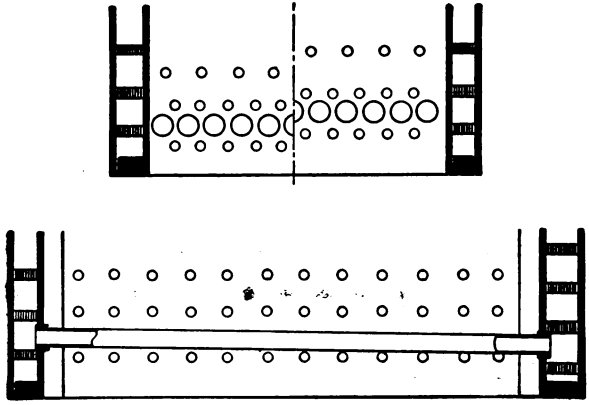

FIGURE 4

the boiler acts upon the spring, tending to straighten it. The end or ends of the spring being free to move, and connected by suitable geared rack and pinion with the pointer of the gauge, this hand or pointer is caused to move across the dial, thus indicating the pressure of steam per square inch in the boiler. When there is no pressure in the boiler the hand should point to 0.

Steam gauges should be tested frequently by comparing them with a test gauge that has been tested against a column of mercury.

The safety valve, or pop valve as it is more familiarly known, is another very important part of a locomotive with which the fireman has business. The object aimed at in equipping a locomotive boiler, or any other boiler, with a safety valve is that the steam pressure may be kept within a safe limit. There should always be two pop valves on a locomotive boiler, so that if one becomes corroded and sticks to its seat the other one will act, thus insuring safety.

The principle of a pop valve's action is this: It is held to its seat by a coil spring that has previously been adjusted to the required amount of resistance. When the pressure under the valve exceeds the resistance of the spring, the valve will rise from its seat and allow the steam to escape until the pressure is lower than the resistance of the spring. The valve will then close at once.

When the fire becomes dull and heavy, caused by ashes accumulating on the grate bars, the grates should be shaken up, which is best done while the engine is working at a moderate speed, or at least when the blower is on. The ash pan should be kept clean and free from ashes. This will allow a free draft of air and prevent the burning out of the grate bars.

The fireman should endeavor while out on the run to keep as even a temperature as possible in the fire-box, and this can only be done by firing light and often, keeping the grates free by shaking and by watching the water level closely. He should have and keep his mind constantly upon his work, always striving to do better to-day than he did yesterday, and his reward is sure to come.

Upon arriving at the end of the run he should take in his flags, or blow out his lamps, and see that the

engine has sufficient fire and water to last until the hostler gets around.

One of the duties that a fireman owes to himself, as well as to his employers, is that he utilize his spare moments in the study of the theory of combustion, the composition of coal, the nature of heat, and various other problems connected with the generation of steam. He will be called upon to undergo an examination as to his knowledge of these questions at some stage of his apprenticeship, and the more intelligence he displays and the more thorough his answers, the faster will be his promotion. Therefore the author considers it fitting and proper that a space be given over at this point for the discussion of these important subjects.

Combustion. One of the main factors in the combustion of coal is the proper supply of air. Air is composed of two gases, oxygen and nitrogen, in the proportion, by volume, of 21 per cent of oxygen and 79 per cent of nitrogen, or by weight, 23 per cent of oxygen and 77 per cent of nitrogen.

The composition of pure dry air is as follows:

By volume, 20.91 parts O. and 79.09 parts N.

By weight, 23.15 parts O. and 76.85 parts N.

Air is a mixture and not a chemical combination of these two elements. The principal constituent of coal and most other fuels, whether solid, liquid or gaseous, is carbon. Hydrogen is a light combustible gas and, combined either with carbon or with carbon and oxygen, in various proportions, is also a valuable constituent of fuels, notably of bituminous coal. The heating value of one pound of pure carbon is rated at 14,500 heat units, while one pound of hydrogen gas contains 62,000 heat units.

Analysis of coal shows that it contains moisture, fixed carbon, volatile matter, ash and sulphur in various proportions according to the quality of the coal. The following table will show the composition of the principal bituminous coals in use in this country for steam purposes. Two samples are selected from each of the great coal producing states, with the exception of Illinois, from which four were taken.

TABLE I

State	Kind of Coal	Moisture	Volatile Matter	Fixed Carbon	Ash	Sulphur
Pennsylvania	Youghiogheny	1.03	36.49	59.05	2.61	0.81
"	Connellsville	1.26	30.10	59.61	8.23	0.78
West Virginia	Quinimont	0.76	18.65	79.26	1.11	0.23
"	Fire Creek	0.61	22.34	75.02	1.47	0.56
E. Kentucky	Peach Orchard	4.60	35.70	53.28	6.42	1.08
"	Pike County	1.80	26.80	67.60	3.80	0.97
Alabama	Cahaba	1.66	33.28	63.04	2.02	0.53
"	Pratt Co.'s	1.47	32.29	59.50	6.73	1.22
Ohio	Hocking Valley	6.59	35.77	49.64	8.00	1.59
"	Muskingum "	3.47	37.88	53.30	5.35	2.24
Indiana	Block	8.50	31.00	57.50	3.00	
"	"	2.50	44.75	51.25	1.50	
W. Kentucky	Nolin River	4.70	33.24	54.94	11.70	2.54
"	Ohio County	3.70	30.70	45.00	3.16	1.24
Illinois	Big Muddy	6.40	30.60	54.60	8.30	1.50
"	Wilmington	15.50	32.80	39.90	11.80	
"	" screenings	14.00	26.00	34.20	23.80	
"	Duquoin	8.90	23.50	60.60	7.00	

The process of combustion consists in the union of the carbon and hydrogen of the fuel with the oxygen of the air. Each atom of carbon combines with two atoms of oxygen, and the energetic vibration set up by their combination is heat. Bituminous coal contains a large percentage of volatile matter which is released and flashes into flame when the coal is thrown

into the furnace, and unless air is supplied in large amounts at this stage of the combustion there will be an excess of smoke and consequent loss of carbon. On the other hand, there is a loss in admitting too much air, because the surplus is heated to the temperature of the furnace without aiding the combustion and will carry off to the stack just as many heat units as were required to raise it from the temperature at which it entered the fire-box to that at which it leaves the flues. Some kinds of coal need more air for their combustion than do others, and good judgment and close observation are needed on the part of the fireman to properly regulate the supply.

The quantity of air required for the combustion of one pound of coal is, by volume, about 150 cu. ft.; by weight, about 12 lbs.

The temperature of the fire-box is usually about 2500°, in some cases reaching as high as 3000°. The temperature of the escaping gases should not be much above nor below 400° F. for bituminous coal.

In order to attain the highest economy in the burning of coal in boiler furnaces two factors are indispensable, viz., a constant high furnace temperature and quick combustion, and these factors can only be secured by supplying the fresh coal constantly just as fast as it is burned, and also by preventing as much as possible the admission of cold air at the furnace. The nitrogen in the atmosphere does not promote combustion, but it enters the fire-box along with the oxygen, and the heat required to raise its temperature to that of the other gases is practically wasted, and as has already been explained, if a surplus of cold air is allowed to pass into the fire-box the waste of heat becomes still greater.

Heat. All matter, whether solid, liquid, or gaseous, consists of molecules or atoms, which are in a state of continual vibration, and the result of this vibration is heat. The intensity of the heat evolved depends upon the degree of agitation to which the molecules are subject. Until as late as the beginning of the nineteenth century two rival theories in regard to the nature of heat had been advocated by scientists. The older of these theories was that heat was a material substance, a subtle elastic fluid termed caloric, and that this fluid penetrated matter as water penetrates a sponge. But this theory was shown to be false by the wonderful researches and experiments of Count Rumford at Munich, Bavaria, in 1798.

By means of the friction between two heavy metallic bodies placed in a wooden trough filled with water, one of the pieces of metal being rotated by machinery driven by horses, Count Rumford succeeded in raising the temperature of the water in two and one-half hours from its original temperature of 60° to 212° F., the boiling point, thus demonstrating that heat is not a material substance, but that it is due to vibration or motion, an internal commotion among the molecules of matter. This theory, known as the Kinetic theory of heat, has since been generally accepted, although it was nearly fifty years after Rumford advocated it in a paper read before the Royal Society of Great Britain in 1798, before scientists generally became converted to this idea of the nature of heat, and the science of Thermo Dynamics was placed on a firm basis.

During the period from 1840 to 1849 Dr. Joule made a series of experiments which not only confirmed the truth of Count Rumford's theory that heat was not a material substance but a form of energy which may be

applied to or taken away from bodies, but Joule's experiments also established a method of estimating in mechanical units or foot pounds the amount of that energy. This latter was a most important discovery, because by means of it the exact relation between heat and work can be accurately measured.

The first law of thermo dynamics is this: Heat and mechanical energy or work are mutually convertible. That is, a certain amount of work will produce a certain amount of heat, and the heat thus produced is capable of producing by its disappearance a fixed amount of mechanical energy if rightly applied. The mechanical energy in the form of heat which, through the medium of the steam engine, has revolutionized the world, was first stored up by the sun's heat millions of years ago in the coal, which in turn, by combustion, is made to release it for purposes of mechanical work.

The general principles of Dr. Joule's device for measuring the amount of work in heat are illustrated in Fig. 5. It consisted of a small copper cylinder containing a known quantity of water at a known temperature. Inside the cylinder and extending through the top was a vertical shaft to which were fixed paddles for stirring the water. Stationary vanes were also placed inside the cylinder. Motion was imparted to the shaft through the medium of a cord or small rope coiled around a drum near the top of the shaft and running over a grooved pulley or sheave. To the free end of the cord a known weight was attached. This weight was allowed to fall through a certain distance, and in falling it turned the shaft with its paddles, which in turn agitated the water, thus producing a certain amount of heat. To illustrate, suppose the weight

to be 77.8 lbs., and that by means of the crank at the top end of the shaft it has been raised to the zero mark at the top of the scale. (See Fig. 5.) One pound of water at 39.1° F. is poured into the copper cylinder,

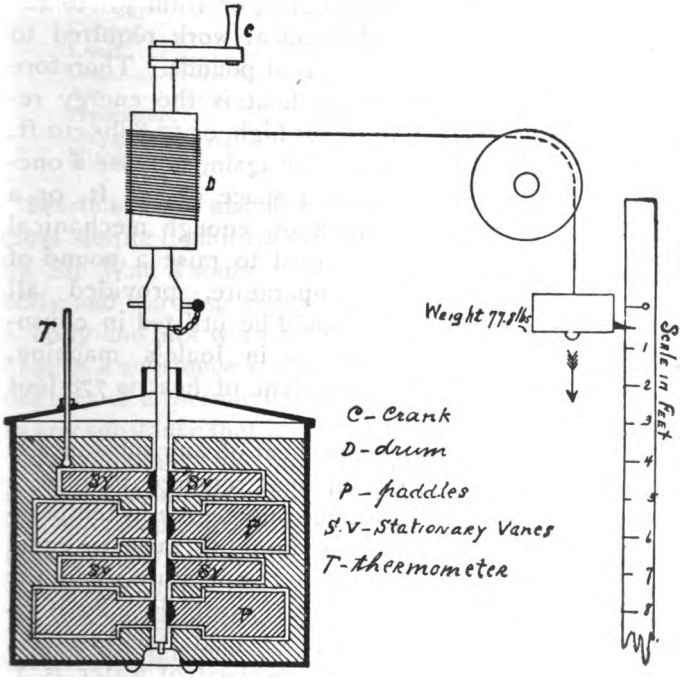

FIGURE 5

which is then closed and the weight released. At the moment the weight passes the 10 ft. mark on the scale the thermometer attached to the cylinder will indicate that the temperature of the water has been raised one degree. Then multiplying the number of pounds in

the weight by the distance in feet through which it fell will give the number of foot pounds of work done. Thus, 77.8 lbs. × 10 ft. = 778 foot pounds.

The heat unit or British thermal unit (B. T. U.) is the quantity of heat required to raise the temperature of one pound of water one degree, or from 39° to 40° F., and the amount of mechanical work required to produce a unit of heat is 778 foot pounds. Therefore the mechanical equivalent of heat is the energy required to raise 778 lbs. one foot high, or 77.8 lbs. 10 ft. high, or 1 lb. 778 feet high. Or again, suppose a one-pound weight falls through a space of 778 ft. or a weight of 778 lbs. falls one foot, enough mechanical energy would thus be developed to raise a pound of water one degree in temperature, provided all the energy so developed could be utilized in churning or stirring the water, as in Joule's machine. Hence the mechanical equivalent of heat is 778 foot pounds.

Specific Heat. The specific heat of any substance is the ratio of the quantity of heat required to raise a given weight of that substance one degree in temperature to the quantity of heat required to raise an equal weight of water one degree in temperature when the water is at its maximum density, 39.1° F. To illustrate, take the specific heat of lead, for instance, which is .031, while the specific heat of water is 1. That means that it would require 31 times as much heat to raise one pound of water one degree in temperature as it would to raise the temperature of a pound of lead one degree.

The following table gives the specific heat of different substances in which engineers are most generally interested.

TABLE 2

Water at 39.1° F.	1.000
Ice at 32° F.	.504
Steam at 212° F.	.480
Mercury	.033
Cast iron	.130
Wrought iron	.113
Soft steel	.116
Copper	.095
Lead	.031
Coal	.240
Air	.238
Hydrogen	3.404
Oxygen	.218
Nitrogen	.244

Sensible Heat and Latent Heat. The plainest and most simple definition of these two terms is that given by Sir Wm. Thomson. He says: "Heat given to a body and warming it is sensible heat. Heat given to a body and not warming it is latent heat." Sensible heat in a substance is the heat that can be measured in degrees of a thermometer, while latent heat is the heat in any substance that is not shown by the thermometer.

To illustrate this more fully, a brief reference to some experiments made by Professor Black in 1762 will no doubt make the matter plain. It will be remembered that at that early date comparatively little was known of the true nature of heat; hence Professor Black's investigations and discoveries along this line appear all the more wonderful. He procured equal weights of ice at 32° F. and water at the same temperature, that is, just at the freezing point, and placing them in separate glass vessels, suspended the vessels in a room in which the uniform temperature was 47° F. He noticed that in one-half hour the water had increased 7° F. in temperature, but that twenty half hours elapsed before all of the ice was melted. Therefore he reasoned that twenty times more heat had

entered the ice than had entered the water, because at the end of the twenty half hours, when the ice was all melted, the water in both vessels was of the same temperature. The water, having absorbed 7° of heat during the first half hour, must have continued to absorb heat at the same rate during the whole of the twenty half hours, although the thermometer did not indicate it. From this he calculated that $7° \times 20 = 140°$ of heat had become latent or hidden in the water.

In another experiment Professor Black placed a lump of melting ice, which he estimated to be at a temperature of 33° F. on the surface, in a vessel containing the same weight of water at 176° F., and he observed that when the whole of the ice had been melted the temperature of the water was 33° F., thus proving that 143° of heat ($176° - 33°$) had been absorbed in melting the ice and was at that moment latent in the water. By these two experiments Professor Black established the theory of the latent heat of water, and his estimate was very near the truth, because the results obtained since that time by the greatest experimenters show that the latent heat of water is 142 heat units, or B. T. U.

Black's experiment for ascertaining the latent heat in steam at atmospheric pressure was made in the following simple manner: He placed a flat, open tin dish on a hot plate over a fire and into the dish he put a small quantity of water at 50° F. In four minutes the water began to boil, and in twenty minutes more it had all evaporated. In the first four minutes the temperature had increased $212° - 50° = 162°$, and the temperature remained at 212° throughout the twenty minutes that it required to evaporate all the water, despite the fact that the water had been receiving

heat during this period at the same rate as during the first four minutes. He therefore reasoned that in the twenty minutes the water had absorbed five times as much heat as it had in the four minutes, or $162° \times 5 = 810°$, without any sensible rise in temperature. Therefore the 810° became latent in the steam. Owing to the crude nature of the experiment Professor Black's estimate of the number of degrees of latent heat in steam was incorrect, as it has been proven by many famous experimenters since then that the latent heat of steam at atmospheric pressure is 965.7 B. T. U.

It will thus be perceived that what is meant by the term latent heat is that quantity of heat which becomes hidden or latent when the state of a body is changed from a solid to a liquid, as in the case of melting ice, or from a liquid to a gaseous state, as with water evaporated into steam. But the heat so disappearing has not been lost; on the contrary it has, while becoming latent, been doing an immense amount of work, as can easily be ascertained by means of a few simple figures. It has been seen that a heat unit is the quantity of heat required to raise one pound of water one degree in temperature and also that the mechanical equivalent of heat, or, in other words, the mechanical energy stored in one heat unit, is equal to 778 foot pounds of work.

A horse power equals 33,000 ft. lbs. of energy in one minute of time, and a heat unit = $778 \div 33{,}000 = .0236$, or about $\frac{1}{42}$ of a horse power. The work done by the heat which becomes latent in converting one pound of ice at 32° F. into water at the same temperature = 142 heat units $\times$ 778 ft. lbs. = 110,476 ft. lbs., which divided by 33,000 equals 3.34 horse power. Again, by the evaporation of one pound of water from

32° F. into steam at atmospheric pressure, 965.7 units of heat become latent in the steam and the work done = 965.7 × 778 = 751,314 ft. lbs. = 22.7 horse power. It will thus be seen what tremendous energy lies stored in one pound of coal, which contains from 12,000 to 14,500 heat units, provided all the heat could be utilized in an engine.

Total Heat of Evaporation. In order to raise the temperature of one pound of water from the freezing point, 32° F., to the boiling point, 212° F., there must be added to the temperature of the water 212° − 32° = 180°. This represents the sensible heat. Then to make the water boil at atmospheric pressure, or, in other words, to evaporate it, there must still be added 965.7 B. T. U., thus 180 + 965.7 = 1,145.7, or in round numbers 1,146 heat units. This represents what is termed the total heat of evaporation at atmospheric pressure and is the sum of the sensible and latent heat in steam at that pressure. But if a thermometer were held in steam evaporating into the open air, as, for instance, in front of the spout of a tea kettle, it would indicate but 212° F.

When steam is generated at a higher pressure than 212°, the sensible heat increases and the latent heat decreases slowly, while at the same time the total heat of evaporation slowly increases as the pressure increases, but not in the same ratio. As, for instance, the total heat in steam at atmospheric pressure is 1,146 B. T. U., while the total heat in steam at 100 lbs. gauge pressure is 1,185 B. T. U., and the sensible temperature of steam at atmospheric pressure is 212°, while at 100 lbs. gauge pressure the temperature is 338 and the latent heat is 876 B. T. U. See Table 4.

Water. The elements that enter into the composi-

tion of pure water are the two gases, hydrogen and oxygen, in the following proportions:

By volume, hydrogen 2, oxygen 1.
By weight, " 11.1, " 88.9.

Perfectly pure water is not attainable, neither is it desirable nor necessary to the welfare of the human race, because the presence of certain proportions of air and ammonia add greatly to its value as an agent for manufacturing purposes and for generating steam. The nearest approach to pure water is rain water, but even this contains 2.5 volumes of air to each 100 volumes of water. Pure distilled water, such for instance as the return water from steam heating systems, is not desirable for use alone in a boiler, as it will cause corrosion and pitting of the sheets, but if it is mixed with other water before going into the boiler its use is highly beneficial, as it will prevent to a certain degree the formation of scale and incrustation. Nearly all water used for the generation of steam in boilers contains more or less scale-forming matter, such as the carbonates of lime and magnesia, the sulphates of lime and magnesia, oxide of iron, silica and organic matter, which latter tends to cause foaming in boilers.

The carbonates of lime and magnesia are the chief causes of incrustation. The sulphate of lime forms a hard crystalline scale which is extremely difficult to remove when once formed on the sheets and tubes of boilers. Of late years the intelligent application of chemistry to the analyzing of feed waters has been of great benefit to engineers and steam users, in that it has enabled them to properly treat the water with solvents either before it is pumped into the boiler or by the introduction into the boiler of certain scale preventing compounds made especially for treating the

particular kind of water used. Where it is necessary to treat water in this manner, great care and watchfulness should be exercised by the engineer in the selection and use of a boiler compound.

From 10 to 40 grains of mineral matter per gallon are held in solution by the waters of the different rivers, streams and lakes; well and mine water contain more.

Water contracts and becomes denser in cooling until it reaches a temperature of 39.1° F., its point of greatest density. Below this temperature it expands, and at 32° F. it becomes solid or freezes, and in the act of freezing it expands considerably, as every engineer who has had to deal with frozen water pipes can testify.

Water is 815 times heavier than atmospheric air. The weight of a cubic foot of water at 39.1° is approximately 62.5 lbs., although authorities differ on this matter, some of them placing it at 62.379 lbs., and others at 62.425 lbs. per cubic foot. As its temperature increases its weight per cubic foot decreases, until at 212° F. one cubic foot weighs 59.76 lbs.

The table which follows is compiled from various sources and gives the weight of a cubic foot of water at different temperatures.

TABLE 3

Temperature	Weight per Cubic Foot	Temperature	Weight per Cubic Foot	Temperature	Weight per Cubic Foot
32° F.	62.42 lbs.	132° F.	61.52 lbs.	230° F.	59.37 lbs.
42°	62.42	142°	61.34	240°	59.10
52°	62.40	152°	61.14	250°	58.85
62°	62.36	162°	60.94	260°	58.52
72°	62.30	172°	60.73	270°	58.21
82°	62.21	182°	60.50	300°	57.26
92°	62.11	192°	60.27	330°	56.24
102°	62.00	202°	60.02	360°	55.16
112°	61.86	212°	59.76	390°	54.03
122°	61.70	220°	59.64	420°	52.86

The boiling point of water varies according to the pressure to which it is subject. In the open air at sea level the boiling point is 212° F. When confined in a boiler under steam pressure the boiling point of water depends upon the pressure and temperature of the steam, as, for instance, at 100 lbs. gauge pressure the temperature of the steam is 338° F., to which temperature the water must be raised before its molecules will separate and be converted into steam. In the absence of any pressure, as in a perfect vacuum, water boils at 32° F. temperature. In a vacuum of 28 in., corresponding to an absolute pressure of .943 lbs., water will boil at 100°, and in a vacuum of 26 in., at which the absolute pressure is 2 lbs., the boiling point of water is 127° F. On the tops of high mountains in a rarefied atmosphere water will boil at a much lower temperature than at sea level; for instance, at an altitude of 15,000 ft. above sea level water boils at 184° F.

Steam. Having discussed to some extent the physical properties of water, it is now in order to devote some time to the study of the nature of steam, which is simply water in its gaseous form, made so by the application of heat.

As has been stated in another portion of this book, matter consists of molecules or atoms inconceivably small in size, yet each having an individuality, and in the case of solids or liquids, each having a mutual cohesion or attraction for the other, and all being in a state of continual vibration more or less violent according to the temperature of the body.

The law of gravitation, which holds the universe together, also exerts its wonderful influence on these atoms and causes them to hold together with more or less tenacity according to the nature of the substance.

Thus it is much more difficult to chip off pieces of iron or granite than it is of wood. But in the case of water and other liquids the atoms, while they adhere to each other to a certain extent, still are not so hard to separate; in fact, they are to some extent repulsive to each other, and unless confined within certain bounds the atoms will gradually scatter and spread out, and finally either be evaporated or sink out of sight in the earth's surface. Heat applied to any substance tends to accelerate the vibrations of the molecules, and if enough heat is applied it will reduce the hardest substances to a liquid or gaseous state.

The process of the generation of steam from water is simply an increase of the natural vibrations of the molecules of the water, caused by the application of heat, until they lose all attraction for each other and become instead entirely repulsive, and unless confined will fly off into space. But, being confined, they continually strike against the sides of the containing vessel, thus causing the pressure which steam or any other gas exerts when under confinement.

Of course steam, like other gases, when under pressure is invisible, but the laws governing its action are well known. These laws, especially those relating to the expansion of steam, will be more fully discussed in the chapter on the Indicator. The temperature of steam in contact with the water from which it is generated, as for instance in the ordinary steam boiler, depends upon the pressure under which it is generated. Thus at atmospheric pressure its temperature is 212° F. If the vessel is closed and the pressure increased the temperature of the steam and also that of the water rises.

Saturated Steam. When steam is taken directly

from the boiler to the engine without being superheated, it is termed saturated steam. This does not necessarily imply that it is wet and mixed with spray and moisture.

Superheated Steam. When steam is conducted into or through a vessel or coils of pipe separate from the boiler in which it was generated and is there heated to a higher temperature than that due to its pressure, it is said to be superheated.

Dry Steam. When steam contains no moisture it is said to be dry. Dry steam may be either saturated or superheated.

Wet Steam. When steam contains mist or spray intermingled, it is termed wet steam, although it may have the same temperature as dry saturated steam of the same pressure.

During the further consideration of steam in this book, saturated steam will be mainly under discussion, for the reason that this is the normal condition of steam as used most generally in steam engines.

Total Heat of Steam. The total heat in steam includes the heat required to raise the temperature of the water from 32° F. to the temperature of the steam plus the heat required to evaporate the water at that temperature. This latter heat becomes latent in the steam, and is therefore called the latent heat of steam.

The work done by the heat acting within the mass of water and causing the molecules to rise to the surface is termed by scientists internal work, and the work done in compressing the steam already formed in the boiler or in pushing it against the superincumbent atmosphere, if the vessel be open, is termed external work. There are, therefore, in reality three elements to be taken into consideration in estimating the total

heat of steam, but as the heat expended in doing external work is done within the mass itself, it may, for practical purposes, be included in the general term latent heat of steam.

Density of Steam. The expression density of steam means the actual weight in pounds or fractions of a pound avoirdupois of a given volume of steam, as one cubic foot. This is a very important point for young engineers especially to remember, so as not to get the two terms, pounds pressure and pounds weight, mixed, as some are prone to do.

Volume of Steam. By this term is meant the volume as expressed by the number of cubic feet in one pound weight of steam.

Relative Volume of Steam. This expression has reference to the number of volumes of steam produced from one volume of water. Thus the steam produced by the evaporation of one cubic foot of water from 39° F. into steam at atmospheric pressure will occupy a space of 1646 cu. ft., but, as the steam is compressed and the pressure allowed to rise, the relative volume of the steam becomes smaller, as, for instance, at 100 lbs. gauge pressure the steam produced from one cubic foot of water will occupy but 237.6 cu. ft., and if the same steam was compressed to 1,000 lbs. absolute or 985.3 lbs. gauge pressure it would then occupy only 30 cu. ft.

The condition of steam as regards its dryness may be approximately estimated by observing its appearance as it issues from a pet cock or other small opening into the atmosphere. Dry or nearly dry steam containing about 1 per cent of moisture will be transparent close to the orifice through which it issues, and even if it is of a grayish white color it may be estimated to contain not over 2 per cent of moisture.

Steam in its relation to the engine should be considered in the character of a vehicle for transferring the energy, created by the heat, from the boiler to the engine. For this reason all steam drums, headers and pipes should be thoroughly insulated, in order to prevent, as much as possible, the loss of heat or energy by radiation.

Table 4 gives the physical properties of steam, and is convenient for reference.

TABLE 4

PROPERTIES OF SATURATED STEAM

Vacuum Inches of Mercury	Absolute Pressure Lbs. per Sq. Inch	Temp. Degrees F.	Total Heat above 32° F.		Latent Heat H-h Heat units	Relative Volume	Cubic Feet in 1 Lb. Wt. of Steam	Wt. of 1 Cubic Foot of Steam, Lbs.
			In the Water h Heat-units	In the Steam H Heat-units				
29 74	.089	32.	0.	1091 7	1091.7	208,080	3333.3	.0003
29.67	.122	40.	8.	1094.1	1086.1	154,330	2472.2	.0004
29.56	.176	50	18.	1097.2	1079.2	107,630	1724.1	.0006
29.40	.254	60.	28.01	1100.2	1072.2	76,370	1223.4	.0008
29.19	.359	70.	38.02	1103.3	1065.3	54,660	875.61	.0011
28.90	.502	80.	48.04	1106.3	1058.3	39,690	635.80	.0016
28.51	.692	90.	58.06	1109.4	1051.3	29,290	469.20	.0021
28.00	.943	100.	68.08	1112.4	1044.4	21,830	349.70	.0028
27.88	1.	102.1	70.09	1113.1	1043.0	20,623	334.23	.0030
25.85	2.	126.3	94.44	1120.5	1026.0	10,730	173.23	.0058
23.83	3.	141.6	109.9	1125.1	1015.3	7,325	118.00	.0085
21.78	4.	153.1	121.4	1128.6	1007.2	5,588	89.80	.0111
19.74	5.	162.3	130.7	1131.4	1000.7	4,530	72.50	.0137
17.70	6.	170.1	138.6	1133.8	995.2	3 816	61.10	.0163
15.67	7.	176.9	145.4	1135.9	990.5	3,302	53.00	.0189
13.63	8.	182.9	151.5	1137.7	986.2	2,912	46.60	.0214
11.60	9.	188.3	156.9	1139.4	982.4	2,607	41.82	.0239
9.56	10.	193.2	161.9	1140.9	979.0	2,361	37.80	.0264
7.52	11.	197.8	166.5	1142.3	975.8	2,159	34.61	.0289
5.49	12.	202.0	170.7	1143.5	972.8	1,990	31.90	.0314
3.45	13.	205.9	174.7	1144.7	970.0	1,846	29.60	.0338
1.41	14.	209.6	178.4	1145.9	967.4	1,721	27.50	.0363
0.00	14.7	212.0	180.9	1146.6	963.7	1,646	26.26	.0379

TABLE 4—*Continued*

Gauge Pressure Lbs. per Sq. In.	Absolute Pressure Lbs. per Sq. In.	Temp. Degrees F.	Total Heat Above 32° F.		Latent Heat H-h Heat-units	Relative Volume	Cubic Feet in 1 Lb. Wt. of Steam	Wt. of 1 Cubic Foot of Steam, Lbs.
			In the Water h Heat-units	In the Steam H Heat-units				
0.3	15	213.3	181.9	1146.9	965.0	1,614	25.90	.0387
1.3	16	216.3	185.3	1147.9	962.7	1,519	24.33	.0411
2.3	17	219.4	188.4	1148.9	960.5	1,434	23.00	.0435
3.3	18	222.4	191.4	1149.8	958.3	1,359	21.80	.0459
4.3	19	225.2	194.3	1150.6	956.3	1,292	20.70	.0483
5.3	20	227.9	197.0	1151.5	954.4	1,231	19.72	.0507
6.3	21	230.5	199.7	1152.2	952.6	1,176	18.84	.0531
7.3	22	233.0	202.2	1153.0	950.8	1,126	18.03	.0555
8.3	23	235.4	204.7	1153.7	949.1	1,080	17.30	.0578
9.3	24	237.8	207.0	1154.5	947.4	1,038	16.62	.0602
10.3	25	240.0	209.3	1155.1	945.8	998	16.00	.0625
11.3	26	242.2	211.5	1155.8	944.3	962	15.42	.0649
12.3	27	244.3	213.7	1156.4	942.8	929	14.90	.0672
13.3	28	246.3	215.7	1157.1	941.3	898	14.40	.0696
14.3	29	248.3	217.8	1157.7	939.9	869	13.91	.0719
15.3	30	250.2	219.7	1158.3	938.9	841	13.50	.0742
16.3	31	252.1	221.6	1158.8	937.2	816	13.07	.0765
17.3	32	254.0	223.5	1159.4	935.9	792	12.68	.0788
18.3	33	255.7	225.3	1159.9	934.6	769	12.32	.0812
19.3	34	257.5	227.1	1160.5	933.4	748	12.00	.0835
20.3	35	259.2	228.8	1161.0	932.2	728	11.66	.0858
21.3	36	260.8	230.5	1161.5	931.0	709	11.36	.0880
22.3	37	262.5	232.1	1162.0	929.8	691	11.07	.0903
23.3	38	264.0	233.8	1162.5	928.7	674	10.80	.0926
24.3	39	265.6	235.4	1162.9	927.6	658	10.53	.0949
25.3	40	267.1	236.9	1163.4	926.5	642	10.28	.0972
26.3	41	268.6	238.5	1163.9	925.4	627	10.05	.0995
27.3	42	270.1	240.0	1164.3	924.4	613	9.83	.1018
28.3	43	271.5	241.4	1164.7	923.3	600	9.61	.1040
29.3	44	272.9	242.9	1165.2	922.3	587	9.41	.1063
30.3	45	274.3	244.3	1165.6	921.3	575	9.21	.1086
31.3	46	275.7	245.7	1166.0	920.4	563	9.02	.1108
32.3	47	277.0	247.0	1166.4	919.4	552	8.84	.1131
33.3	48	278.3	248.4	1166.8	918.5	541	8.67	.1153
34.3	49	279.6	249.7	1167.2	917.5	531	8.50	.1176
35.3	50	280.9	251.0	1167.6	916.6	520	8.34	.1198
36.3	51	282.1	252.2	1168.0	915.7	511	8.19	.1221
37.3	52	283.3	253.5	1168.4	914.9	502	8.04	.1243

TABLE 4—*Continued*

Gauge Pressure Lbs. per Sq. In.	Absolute Pressure Lbs. per Sq. In.	Temp. Degrees F.	Total Heat above 32° F.		Latent Heat H-h Heat-units	Relative Volume	Cubic Feet in 1 Lb. Wt. of Steam	Wt. of 1 Cubic Foot of Steam, Lbs.
			In the Water h Heat-units	In the Steam H Heat-units				
38.3	53	284.5	254.7	1168.7	914.0	492	7.90	.1266
39.3	54	285.7	256.0	1169.1	913.1	484	7.76	.1288
40.3	55	286.9	257.2	1169.4	912.3	476	7.63	.1311
41.3	56	288.1	258.3	1169.8	911.5	468	7.50	.1333
42.3	57	289.1	259.5	1170.1	910.6	460	7.38	.1355
43.3	58	290.3	260.7	1170.5	909.8	453	7.26	.1377
44.3	59	291.4	261.8	1170.8	909.0	446	7.14	.1400
45.3	60	292.5	262.9	1171.2	908.2	439	7.03	.1422
46.3	61	293.6	264.0	1171.5	907.5	432	6.92	.1444
47.3	62	294.7	265.1	1171.8	906.7	425	6.82	.1466
48.3	63	295.7	266.2	1172.1	905.9	419	6.72	.1488
49.3	64	296.8	267.2	1172.4	905.2	413	6.62	.1511
50.3	65	297.8	268.3	1172.8	904.5	407	6.53	.1533
51.3	66	298.8	269.3	1173.1	903.7	401	6.43	.1555
52.3	67	299.8	270.4	1173.4	903.0	395	6.34	.1577
53 3	68	300.8	271.4	1173.7	902.3	390	6.25	.1599
54.3	69	301.8	272.4	1174.0	901.6	384	6.17	.1621
55.3	70	302.7	273.4	1174.3	900.9	379	6.09	.1643
56.3	71	303.7	274.4	1174.6	900.2	374	6.01	.1665
57.3	72	304.6	275.3	1174.8	899.5	369	5.93	1687
58.3	73	305.6	276.3	1175.1	898.9	365	5.85	.1709
59.3	74	306.5	277.2	1175.4	898.2	360	5.78	.1731
60.3	75	307.4	278.2	1175.7	897.5	356	5.71	.1753
61.3	76	308.3	279.1	1176.0	896.9	351	5.63	.1775
62.3	77	309.2	280.0	1176.2	896.2	347	5.57	.1797
63.3	78	310.1	280.9	1176.5	895.6	343	5.50	.1819
64.3	79	310.9	281.8	1176.8	895.0	339	5.43	.1840
65.3	80	311.8	282.7	1177.0	894.3	334	5.37	.1862
66.3	81	312.7	283.6	1177.3	893.7	331	5.31	.1884
67.3	82	313.5	284.5	1177.6	893.1	327	5.25	.1906
68.3	83	314.4	285.3	1177.8	892.5	323	5.18	.1928
69.3	84	315.2	286.2	1178.1	891.9	320	5.13	.1950
70.3	85	316.0	287.0	1178.3	891.3	316	5.07	.1971
71.3	86	316.8	287.9	1178.6	890.7	313	5.02	.1993
72.3	87	317.7	288.7	1178.8	890.1	309	4.96	.2015
73.3	88	318.5	289.5	1179.1	889.5	306	4.91	.2036
74.3	89	319.3	290.4	1179.3	888.9	303	4.86	.2058
75.3	90	320.0	291.2	1179.6	888.4	299	4.81	.2080

TABLE 4—*Continued*

Gauge Pressure Lbs. per Sq. In.	Absolute Pressure Lbs. per Sq. In.	Temp. Degrees F.	Total Heat above 32° F.		Latent Heat H-h Heat-units	Relative Volume	Cubic Feet in 1 Lb. Wt. of Steam	Wt. of 1 Cubic Foot of Steam, Lbs.
			In the Water h Heat-units	In the Steam H Heat-units				
76.3	91	320.8	292.0	1179.8	887.8	296	4.76	.2102
77.3	92	321.6	292.8	1180.0	887.2	293	4.71	.2123
78.3	93	322.4	293.6	1180.3	886.7	290	4.66	.2145
79.3	94	323.1	294.4	1180.5	886.1	287	4.62	.2166
80.3	95	323.9	295.1	1180.7	885.6	285	4.57	.2188
81.3	96	324.6	295.9	1181.0	885.0	282	4.53	.2210
82.3	97	325.4	296.7	1181.2	884.5	279	4.48	.2231
83.3	98	326.1	297.4	1181.4	884.0	276	4.44	.2253
84.3	99	326.8	298.2	1181.6	883.4	274	4.40	.2274
85.3	100	327.6	298.9	1181.8	882.9	271	4.36	.2296
86.3	101	328.3	299.7	1182.1	882.4	268	4.32	.2317
87.3	102	329.0	300.4	1182.3	881.9	266	4.28	.2339
88.3	103	329.7	301.1	1182.5	881.4	264	4.24	.2360
89.3	104	330.4	301.9	1182.7	880.8	261	4.20	.2382
90.3	105	331.1	302.6	1182.9	880.3	259	4.16	.2403
91.3	106	331.8	303.3	1183.1	879.8	257	4.12	.2425
92.3	107	332.5	304.0	1183.4	879.3	254	4.09	.2446
93.3	108	333.2	304.7	1183.6	878.8	252	4.05	.2467
94.3	109	333.9	305.4	1183.8	878.3	250	4.02	.2489
95.3	110	334.5	306.1	1184.0	877.9	248	3.98	.2510
96.3	111	335.2	306.8	1184.2	877.4	246	3.95	.2531
97.3	112	335.9	307.5	1184.4	876.9	244	3.92	.2553
98.3	113	336.5	308.2	1184.6	876.4	242	3.88	.2574
99.3	114	337.2	308.8	1184.8	875.9	240	3.85	.2596
100.3	115	337.8	309.5	1185.0	875.5	238	3.82	.2617
101.3	116	338.5	310.2	1185.2	875.0	236	3.79	.2638
102.3	117	339.1	310.8	1185.4	874.5	234	3.76	.2660
103.3	118	339.7	311.5	1185.6	874.1	232	3.73	.2681
104.3	119	340.4	312.1	1185.8	873.6	230	3.70	.2703
105.3	120	341.0	312.8	1185.9	873.2	228	3.67	.2764
106.3	121	341.6	313.4	1186.1	872.7	227	3.64	.2745
107.3	122	342.2	314.1	1186.3	872.3	225	3.62	.2766
108.3	123	342.9	314.7	1186.5	871.8	223	3.59	.2788
109.3	124	343.5	315.3	1186.7	871.4	221	3.56	.2809
110.3	125	344.1	316.0	1186.9	870.9	220	3.53	.2830
111.3	126	344.7	316.6	1187.1	870.5	218	3.51	.2851
112.3	127	345.3	317.2	1187.3	870.0	216	3.48	.2872
113.3	128	345.9	317.8	1187.4	869.6	215	3.46	.2894

TABLE 4—*Continued*

Gauge Pressure Lbs. per Sq. In.	Absolute Pressure Lbs. per Sq. In.	Temp. Degrees F.	Total Heat Above 32° F.		Latent Heat H-h Heat-units	Relative Volume	Cubic Feet in 1 Lb. Wt. of Steam	Wt. of 1 Cubic Foot of Steam, Lbs.
			In the Water h Heat-units	In the Steam H Heat-units				
114.3	129	346.5	318.4	1187.6	869.2	213	3.43	.2915
115.3	130	347.1	319.1	1187.8	868.7	212	3.41	.2936
116.3	131	347.6	319.7	1188.0	868.3	210	3.38	.2957
117.3	132	348.2	320.3	1188.2	867.9	209	3.36	.2978
118.3	133	348.8	320.8	1188.3	867.5	207	3.33	.3000
119.3	134	349.4	321.5	1188.5	867.0	206	3.31	.3021
120.3	135	350.0	322.1	1188.7	866.6	204	3.29	.3042
121.3	136	350.5	322.6	1188.9	866.2	203	3.27	.3063
122.3	137	351.1	323.2	1189.0	865.8	201	3.24	.3084
123.3	138	351.8	323.8	1189.2	865.4	200	3.22	.3105
124.3	139	352.2	324.4	1189.4	865.0	199	3.20	.3126
125.3	140	352.8	325.0	1189.5	864.6	197	3.18	.3147
126.3	141	353.3	325.5	1189.7	864.2	196	3.16	.3169
127.3	142	353.9	326.1	1189.9	863.8	195	3.14	.3190
128.3	143	354.4	326.7	1190.0	863.4	193	3.11	.3211
129.3	144	355.0	327.2	1190.2	863.0	192	3.09	.3232
130.3	145	355.5	327.8	1190.4	862.6	191	3.07	.3253
131.3	146	356.0	328.4	1190.5	862.2	190	3.05	.3274
133.3	148	357.1	329.5	1190.9	861.4	187	3.02	.3316
135.3	150	358.2	330.6	1191.2	860.6	185	2.98	.3358
140.3	155	360.7	333.2	1192.0	858.7	179	2.89	.3463
145.3	160	363.3	335.9	1192.7	856.9	174	2.80	.3567
150.3	165	365.7	338.4	1193.5	855.1	169	2.72	.3671
155.3	170	368.2	340.9	1194.2	853.3	164	2.65	.3775
160.3	175	370.5	343.4	1194.9	851.6	160	2.58	.3879
165.3	180	372.8	345.8	1195.7	849.9	156	2.51	.3983
170.3	185	375.1	348.1	1196.3	848.2	152	2.45	.4087
175.3	190	377.3	350.4	1197.0	846.6	148	2.39	.4191
180.3	195	379.5	352.7	1197.7	845.0	144	2.33	.4296
185.3	200	381.6	354.9	1198.3	843.4	141	2.27	.4400
190.3	205	383.7	357.1	1199.0	841.9	138	2.22	.4503
195.3	210	385.7	359.2	1199.6	840.4	135	2.17	.4605
200.3	215	387.7	361.3	1200.2	838.9	132	2.12	.4707
205.3	220	389.7	362.2	1200.8	838.6	129	2.06	.4852
245.3	260	404.4	377.4	1205.3	827.9	110	1.76	.5686
285.3	300	417.4	390.9	1209.2	818.3	96	1.53	.6515
485.3	500	467.4	443.5	1224.5	781.0	59	.94	1.062
685.3	700	504.1	482.4	1235.7	753.3	42	.68	1.470
985.3	1000	546.8	528.3	1248.7	720.3	30	.48	2.082

Questions

1. What is one of the most important of a fireman's duties?

2. What should the fireman attend to first of all when getting his engine ready to start out from the roundhouse?

3. What other details should be looked after at this time?

4. What condition should his fire be in before leaving a terminal?

5. What is the proper depth of fire to be carried?

6. Should the fireman read and understand the train orders?

7. How should the coal be supplied to the fire while running?

8. What is the best rule for the fireman to observe?

9. What precautions should a fireman practice respecting admission of air to the fire-box?

10. How may he prevent the grates from being burned out?

11. Explain why the exhaust creates such a strong draft.

12. When should the blower be used?

13. Why is a larger grate area required for hard coal than for soft coal?

14. Describe a water grate.

15. How many square feet of grate surface is needed to burn one ton of soft coal per hour?

16. For what purpose is a steam gauge connected to a boiler?

17. Explain the construction and working of the Bourdon spring gauge.

18. How should steam gauges be tested?

19. For what purpose is a safety valve used?

20. How many pop valves should a locomotive boiler be equipped with?

21. Explain the working of a pop valve.

22. What are the fireman's duties upon arrival at a terminal?

23. What is combustion?

24. What is one of the main factors in combustion?

25. Of what is air composed?

26. In what proportion are these two gases combined?

27. What is the principal constituent of coal and other fuels?

28. What other valuable constituent is contained in bituminous coal?

29. What is the usual temperature of a boiler furnace when in active operation?

30. About what should be the temperature of the escaping gases?

31. What two factors are indispensable in the economical use of coal?

32. What is heat?

33. What is the heat unit?

34. What is the mechanical equivalent of heat?

35. How many heat units are there in one pound of carbon?

36. How many heat units are there in one pound of hydrogen gas?

37. What is specific heat?

38. What is sensible heat?

39. What is latent heat?

40. Is the latent heat imparted to a body lost?

41. What is meant by the total heat of evaporation?

42. How much heat expressed in heat units is re-

quired to evaporate one pound of water from a temperature of 32° into steam at atmospheric pressure?

43. Name the two elements composing pure water.

44. In what proportion are these two gases combined in the formation of water?

45. Is perfectly pure water desirable for use in steam boilers?

46. What causes scale to form in boilers?

47. What proportion of mineral matter is usually found in water?

48. What is steam?

49. Of what does matter consist?

50. How does the application of heat to any substance affect its molecules?

51. In what particular manner does heat affect the molecules of water?

52. Is steam under pressure visible?

53. What is saturated steam?

54. What is dry steam?

55. What is superheated steam?

56. What is meant by the term total heat in steam?

57. What is meant by the density of steam?

58. What is meant by the volume of steam?

59. What is the weight of a cubic foot of water at 39.1° temperature?

60. What is the weight of a cubic foot of water at a temperature of 212°?

61. What is the boiling point of water in the open air at sea level?

62. At what temperature will water boil in a perfect vacuum?

63. What is meant by the relative volume of steam?

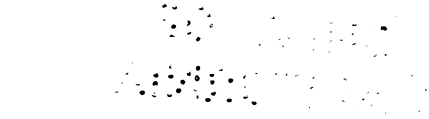

CHAPTER II

THE BOILER

In order that the student may get a general idea of the construction of a locomotive boiler, a sectional elevation of one is shown in Fig. 6.

The four vital organs of a locomotive boiler are: first, the fire-box A; second, the cylinder or barrel B-B; third, the flues or tubes C-C, and fourth, the smokestack D. Underneath the fire-box is suspended the ash pan E, next above the ash pan appears the mud ring F-F. This is a wrought iron bar bent to the proper form to extend around the bottom of the inside of the fire-box, the ends welded, and the ring thus formed is then drilled and riveted to the inside and outside sheets.

The fire-box is a rectangular box constructed of steel plates G-G from $\frac{3}{8}$ to $\frac{9}{16}$ in. in thickness. The inner shell is surrounded by an outside shell H-H, also constructed of steel plates, usually of about the same thickness as the inner plates. The outside shell is enough larger than the inside one to allow a space of $2\frac{1}{2}$ to $4\frac{1}{2}$ in. between the inner and outer plates. This space is called the water space and entirely surrounds the fire-box on the four sides, the water occupying it being in free communication with the main body of water in the boiler It will thus be seen that the flat sides of the fire-box are subjected to the full pressure of the steam, and unless they be strengthened in some manner they will bulge apart. This danger is obviated by the use of stay bolts J-J, Fig. 6. These are made of the best quality of wrought iron, generally

from ⅞ to 1 1/16 in. in diameter, and have a screw thread cut their whole length. They are screwed through both the outside and inside plates at intervals of from 4 to 4½ in. apart center to center, thus securely binding the plates together. The projecting ends of these stay bolts are also riveted down onto the plates, thus further increasing their holding power.

Owing to the unequal expansion and contraction of the inner and outer plates, stay bolts are subjected to great strains and very frequently break, thereby causing a large amount of trouble. They should be made

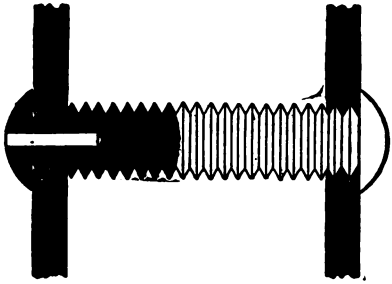

FIGURE 7

tubular, or at least have a small hole drilled into one end, as shown in Fig. 7, extending into the bolt a distance greater than the thickness of the outside plate, so that if the bolt breaks which generally occurs next the outside plate, the water will escape through the fracture into the hole and thus indicate the defect and the danger.

The Tate flexible stay bolt, which received the highest award at the St. Louis exposition in 1904, appears to offer at least a partial solution of the problem of staying fire-box sheets. Fig. 8 is a sectional view showing the design of this stay bolt. The ball-shaped

head of the bolt C is inclosed within a socket formed by a sleeve B that screws into the outer sheet, and a cap A that screws onto the sleeve. The other end of the bolt is screwed into and through the fire sheet a

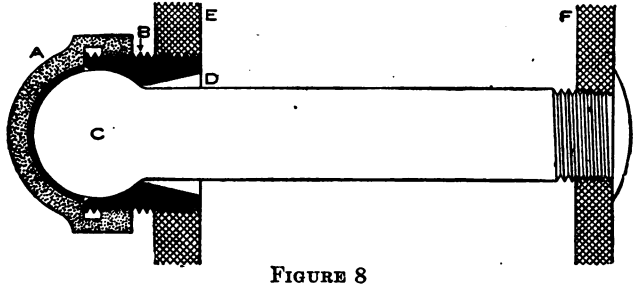

FIGURE 8

sufficient distance to allow of riveting. It is apparent that the freedom of movement of the head of the bolt within its socket will allow the fire sheet to go and come, without subjecting the bolt to such severe strains and transverse stresses as would occur if the bolt were rigid. Fig. 9 is a full view of the bolt,

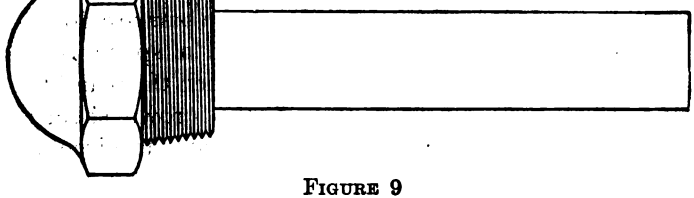

FIGURE 9

except that the thread has not yet been cut on the end that screws into the fire sheet. The Tate flexible stay bolt is manufactured by the Flannery Bolt Company, Pittsburg, Pa.

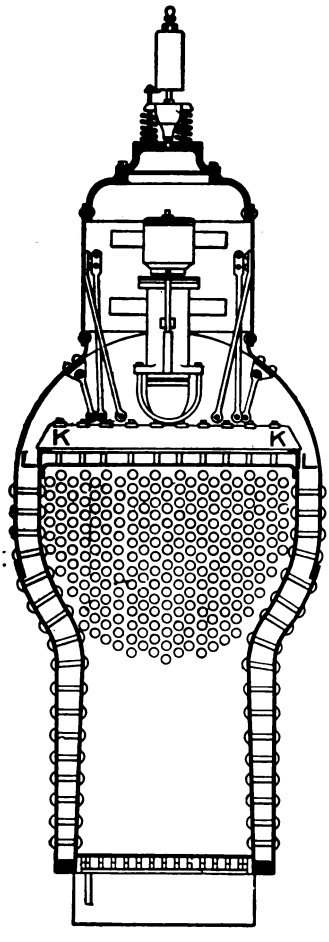

FIGURE 10

It is also necessary to strengthen the flat top or crown sheet of the fire-box. There are three common methods by which this is done: first, by crown bars; second, by radial stays, and third, by the Belpaire system.

In Fig. 6 the crown bar method is shown, K-K being the ends of the crown bars Fig. 10 is a transverse sectional view of the same boiler, and one of the crown bars, K-K, is shown extending across the top of the fire-box above the crown sheet and supported at the ends by special castings that rest on the edges of the side sheets and on the flange of the crown sheet at L-L. These crown bars are double girders, and a space is allowed between them and the top of the crown sheet to allow the water to circulate freely. At intervals of 4 to 5 in. crown bolts are placed having the head inside the fire-box and the nut bearing on a plate on top of the crown bar. There is also a thimble or ring for each bolt to pass through, between the top of the crown

sheet and the bottom of the crown bars. These thimbles maintain the proper distance between the crown sheet and crown bars.

The second method of supporting the crown sheet is by the use of radial stays, which are long stay bolts screwed into the outer shell and into the crown sheet.

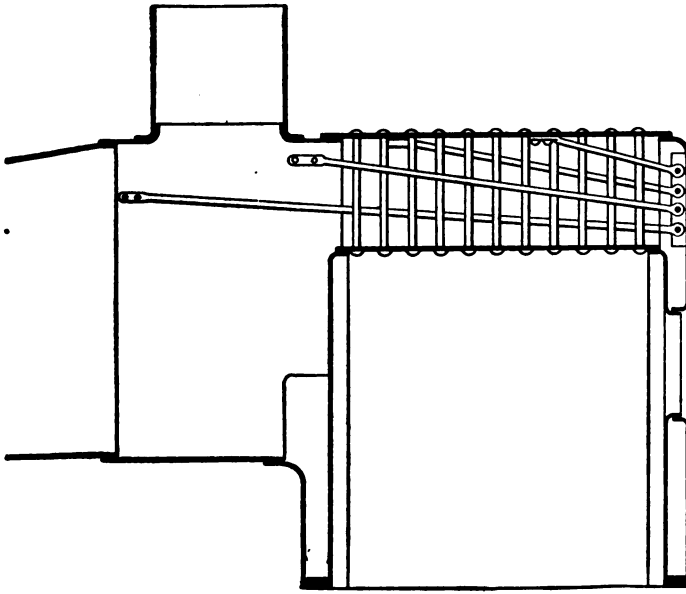

FIGURE 11

Fig. 11 shows a longitudinal section of a fire-box having the crown sheet secured by radial stays, and Fig. 12 is a transverse section and back view of the same. The principal defect in this construction is, that in order to resist successfully the strains induced by the pressure on the crown sheet, the stays should be placed at right angles to its surface, and in order

to resist the pressure on the outer shell they should be radial to its cylindrical form, but as it is impossible to so locate them the strains are not equally divided and a certain distortion of both the stays and the sheets is the result. The only thing that can be done under

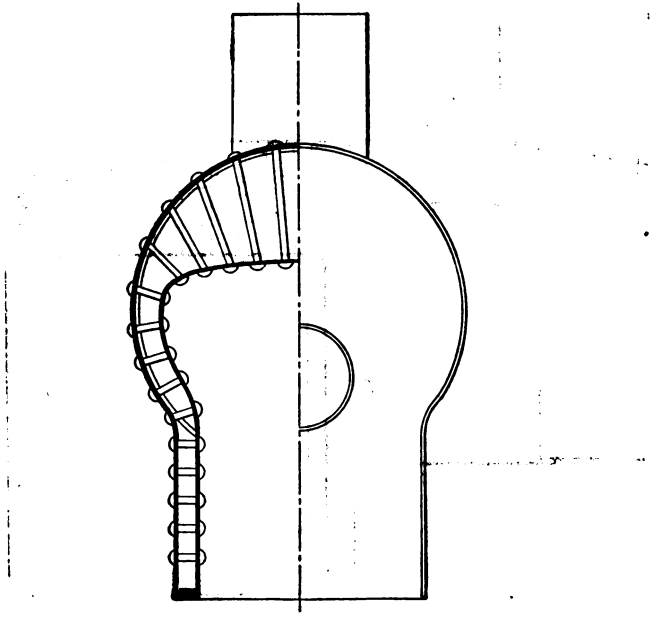

FIGURE 12

such conditions is to approximate as closely as possible the correct position of the stays

In the third or Belpaire system the outside shell of the boiler directly over the crown sheet is made flat to conform to the surface of the crown sheet. This permits of positive staying, the stays all having good

bearings in and on the sheets. This method is illustrated by Figs. 13 and 14, which show longitudinal and transverse sections of this form of fire-box. The long stays S S S are seen to be connected at right angles to the flat plates, and the sides, which are also flat, are braced by the rods B B B extending across from side to side. A great advantage in this form of fire-box is

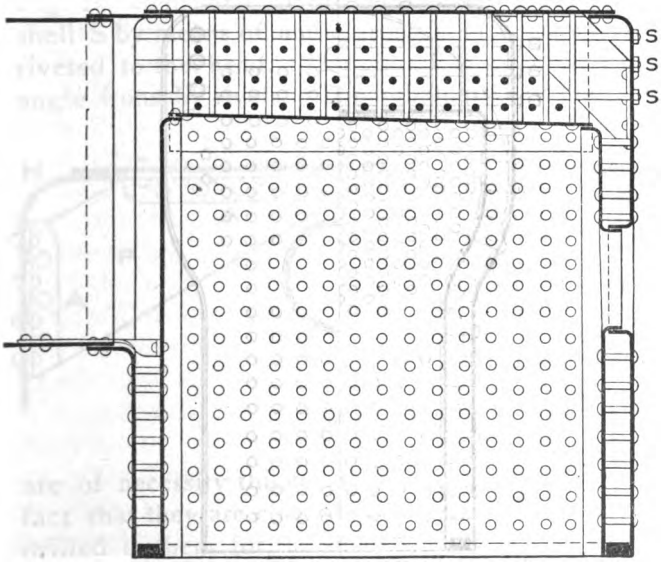

FIGURE 13

that the crown sheet and the flat outside sheet directly over it have more or less flexibility and are free to bend or spring, according as the inside plates become heated and expand, or cool and contract. On the other hand, if the outside sheet is cylindrical in shape and has the crown sheet stayed to it by means of radial stays, it will be subjected to excessive distor-

tional strains caused by the more or less pushing upwards of the stays as the inner plates become heated.

The crown sheets of locomotive boilers are as a rule made to slope downwards from the front end of the fire-box toward the back end, so as to be several inches lower behind than in front. This is done in order to lessen the danger of the back end of the

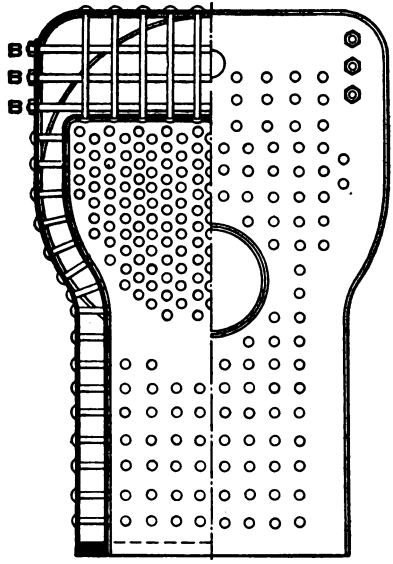

FIGURE 14

crown sheet becoming uncovered of water in running down a steep grade. There is not so much danger of the front end of the crown sheet becoming uncovered, either in going up or down a grade, for the reason that it is nearer the center of the length of the boiler.

The usual method of staying the heads of locomotive boilers is illustrated in Fig. 6. Diagonal stays or

braces S S S S are used, having one end riveted to the shell and the other end connected to that portion of the head that needs bracing.

The flues serve to brace the flue sheet and all of that portion of the front head to which they are connected. Sometimes gusset stays are used for staying the heads. A gusset stay is a triangular piece of boiler plate P, Fig. 15, connected to the boiler head H and to the shell S by means of angle irons A A A A, which are riveted to the head. The plate P is connected to the angle irons by rivets. The tube plates or flue sheets

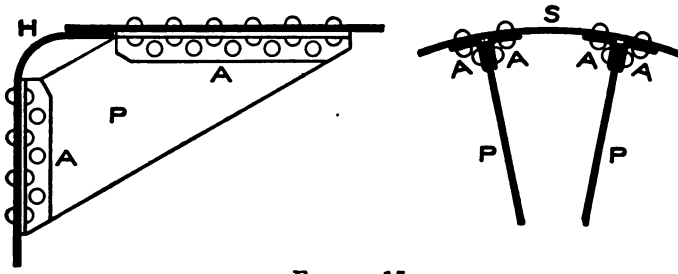

FIGURE 15

are of necessity thicker than the shell, owing to the fact that they are considerably weakened by the holes drilled in them for the tubes. By reference to Fig. 6 the arrangement of the tubes will be clearly understood, N being the fire-box end and M the smoke-box end. Fig. 10 gives a view of the fire-box end of the tubes, which in this case are arranged in vertical rows. In some cases the tubes are placed in horizontal rows. Opinions differ as to the best arrangement, but it is generally conceded that the plan of having them in vertical rows permits of a freer circulation of the water around them.

The diameter of locomotive tubes is usually two inches, as that size has been found by experience to be the most suitable for the distribution of the hot gases on their way from the fire-box to the smoke-stack.

The tubes or flues are made water-tight in the sheets by being expanded in the holes drilled to receive them. The ends of the tubes are allowed to project through the sheets ¼ in. or more. Copper ferrules are generally slipped in over the outside of the tubes, and the tube is then expanded to fill the hole and a water-tight joint is thus secured. After the tube has been sufficiently expanded, the projecting end is turned back onto the sheet and formed into a bead by the use of a caulking tool made especially for the purpose. Fig. 16 is a sectional view of one end of a tube as it appears after being expanded into the sheet.

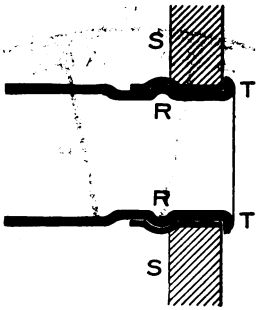

FIGURE 16

There have been various types of tools designed and made for expanding tubes, but the two most generally used are the Prosser, Figs 17 and 18, and the Dudgeon, Fig 19.

The Prosser tube expander is an expanding plug made up of eight or more sectors, 1, 2, 3, 4, 5, 6, 7, 8, held together by an open steel ring or spring clasp C (see Fig. 18). The sector-shaped pieces have their inner edges cut away in such shape as to leave a tapered hole H through the center of the plug. Into this hole the tapered mandrel E is inserted, and when the expander is inserted into the mouth of the tube and

the mandrel driven in, the sectors will be slightly separated and the tendency will be to expand the tubes. The outside conformation of the sectors composing the plug is such that, when the tube is expanded, it not only completely fills the hole in the

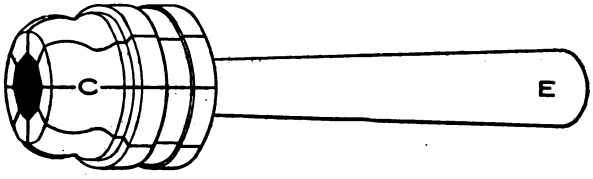

FIGURE 17

tube sheet but is also expanded past the edge of the hole, both on the inside and outside of the sheet, thus securely binding the tube in the sheet and causing it to act as a brace. Referring to Fig. 16, S S is the tube sheet, R R shows the expanded ridge on the tube inside the sheet, and T T indicates the manner in which the end of the tube is expanded and beaded over onto the outer edge of the hole.

The Dudgeon roller tube expander, shown in Fig. 19, consists of a hollow plug having a sleeve or cap at one end that bears against the outside of the sheet, thus serving as a guide to the roller when in use. Three cavities are cut longitudinally in the plug, and into each one of these cavities a roller is inserted which is free to revolve. These rollers can

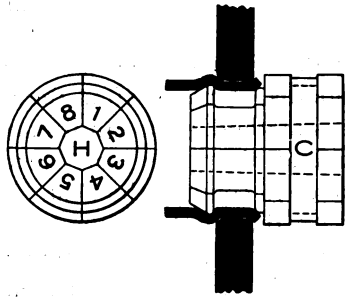

FIGURE 18

also move a short distance outward from the center of the plug. In using this expander the plug is inserted into the mouth of the tube as far as the cap will permit. A tapered mandrel is then driven into the central opening, and the rollers are forced out against the inner surface of the tube. The mandrel is then slowly turned around by means of a short steel rod inserted into one of the holes shown in the head (see Fig. 19). This causes the plug to revolve, as well as the rollers which bear hard against the tube, and expand it so as to fill the hole in the sheet.

The Dudgeon expander is also a very efficient tool for repairing leaky tubes. Cast iron or steel ferrules

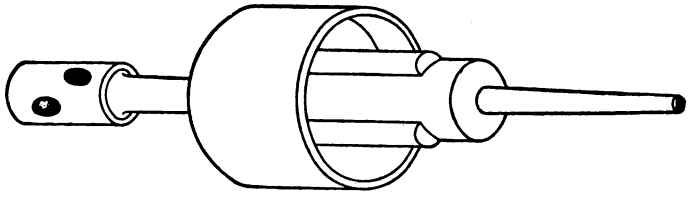

FIGURE 19

made slightly tapering are sometimes driven into the mouths of tubes after they have been expanded, but this method, although it may serve to prevent leakage, will at the same time decrease the capacity of the tubes to conduct the heat.

As the term tensile strength (T. S.) will be used quite frequently in the remaining portion of this chapter, it is proper that its meaning be explained for the benefit of the beginner.

The expression tensile strength per square inch as referring to a boiler sheet means that when the plate is rolled, and before it is accepted by the inspector, a

small test piece having a sectional area of one square inch is cut from the plate and placed in a testing machine, where it is subjected to a pull or strain in the direction of its length, and this strain must equal the T. S. called for in the specifications. If the specifications call for a T. S. of 66,000 lbs. per square inch, the test piece must withstand that much of a strain before showing signs of breaking, otherwise the sheet will or should be rejected.

When steel was first introduced as a material for boiler plate, it was customary to demand a high tensile strength, 70,000 to 74,000 lbs. per square inch, but experience and practice demonstrated in course of time that it was much safer to use a material of lower tensile strength. It was found that with steel boiler plate of high tenacity there was great liability of its cracking, and also of certain changes occurring in its physical properties, brought about by the variations in temperature to which it was exposed. Consequently present-day specifications for steel boiler plate call for tensile strengths running from 55,000 to 66,000 lbs., usually 60,000 lbs. per square inch. Dr. Thurston gives what he calls "good specifications" for boiler steel as follow: "Sheets to be of uniform thickness, smooth finish, and sheared closely to size ordered. Tensile strength to be 60,000 lbs. per square inch for fire-box sheets and 55,000 lbs. per square inch for shell sheets. Working test: a piece from each sheet to be heated to a dark cherry red, plunged into water at 60° and bent double, cold, under the hammer. Such piece to show no flaw after bending." The U. S. Board of Supervising Inspectors of Steam Vessels prescribes, in Section 3 of General Rules and Regulations, the following method for ascertaining the tensile strength of

steel plate for boilers: "There shall be taken from each sheet to be used in shell or other parts of boiler which are subject to tensile strain, a test piece prepared in form according to the following diagram:

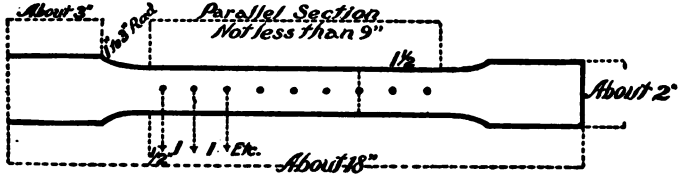

TEST PIECE

The straight part in center shall be 9 in. in length and 1 in. in width, marked with light prick punch marks at distances 1 in. apart, spaced so as to give 8 in. in length. The sample must show, when tested, an elongation of at least 25 per cent in a length of 2 in. for thickness up to ¼ in. inclusive; in a length of 4 in., for over ¼ in. to $\frac{7}{16}$ in. inclusive; in a length of 6 in., for all plates over $\frac{7}{16}$ in. and under 1¾ in. in thickness. The samples shall also be capable of being bent to a curve of which the inner radius is not greater than 1½ times the thickness of the plates, after having been heated uniformly to a low cherry red and quenched in water of 82° F."

Punched and Drilled Plates. Much has been written on this subject, and it is still open for discussion. If the material is a good, soft steel, punched sheets are apparently as strong and in some instances stronger than drilled; especially is this the case with regard to the shearing resistance of the rivets, which is greater with punched than with drilled holes.

Concerning rivets and rivet iron and steel Dr. Thurston has this to say in his "Manual of Steam

Boilers": "Rivet iron should have a tenacity in the bar approaching 60,000 lbs. per square inch, and should be as ductile as the very best boiler plate when cold. A good 5/8-in. iron rivet can be doubled up and hammered together cold without exhibiting a trace of fracture." The shearing resistance of iron rivets is about 85 per cent and that of steel rivets about 77 per cent of the tenacity of the original bar, as shown by experiments made by Greig and Eyth. The researches made by Wöhler demonstrated that the shearing strength of iron was about four-fifths of the tensile strength.

The tables that follow have been compiled from the highest authorities and show the results of a long and exhaustive series of tests and experiments made in order to ascertain the proportions of riveted joints that will give the highest efficiencies.

The following table gives the diameters of rivets for various thicknesses of plates and is calculated according to a rule given by Unwin.

TABLE 5

TABLE OF DIAMETERS OF RIVETS*

Thickness of Plate	Diameter of Rivet	Thickness of Plate	Diameter of Rivet
1/4 inch	1/2 inch	9/16 inch	7/8 inch
5/16 "	9/16 "	5/8 "	15/16 "
3/8 "	11/16 "	3/4 "	1 1/16 "
7/16 "	3/4 "	7/8 "	1 1/8 "
1/2 "	13/16 "	1 "	1 1/4 "

The efficiency of the joint is the percentage of the strength of the solid plate that is retained in the joint,

*Machine design—W. C. Unwin.

and it depends upon the kind of joint and method of construction.

If the thickness of the plate is more than ½ in., the joint should always be of the double butt type.

The diameters of rivets, rivet holes, pitch and efficiency of joint, as given in the following table, which was published in the "Locomotive" several years ago, were adopted at the time by some of the best establishments in the United States.*

TABLE 6

PROPORTIONS AND EFFICIENCIES OF RIVETED JOINTS

	Inch	Inch	Inch	Inch	Inch
Thickness of plate	1/4	5/16	3/8	7/16	1/2
Diameter of rivet	5/8	11/16	3/4	13/16	7/8
Diameter of rivet-hole	11/16	3/4	13/16	7/8	15/16
Pitch for single riveting	2	2 1/16	2 1/8	2 3/16	2 1/4
Pitch for double riveting	3	3 1/8	3 1/4	3 3/8	3 1/2
Efficiency—single-riveted joint	.66	.64	.62	.60	.58
Efficiency—double-riveted joint	.77	.76	.75	.74	.73

Concerning the proportions of double-riveted butt joints, Professor Kent says: "Practically it may be said that we get a double-riveted butt joint of maximum strength by making the diameter of the rivet about 1.8 times the thickness of the plate, and making the pitch 4.1 times the diameter of the hole."

Table 7, as given below, is condensed from the report of a test of double-riveted lap and butt joints.† In this test the tensile strength of the plates was 56,000 to

*Thurston's Manual of Steam Boilers.

† Proc. Inst. M. E., Oct., 1888.

58,000 lbs. per square inch, and the shearing resistance of the rivets (steel) was about 50,000 lbs. per square inch.

TABLE 7

DIAMETER AND PITCH OF RIVETS—DOUBLE-RIVETED JOINT

Kind of Joint	Thickness of Plate	Diameter of Rivet	Ratio of Pitch to Diameter
Lap	$\frac{3}{8}$ inch	0.8 inches	3.6 inches
Butt	$\frac{3}{4}$ "	0.7 "	3.9 "
Butt	$\frac{1}{4}$ "	1.1 "	4.0 "
Butt	1 "	1.3 "	3.9 "

Lloyd's rules, condensed, are as follows:

LLOYD'S RULES—THICKNESS OF PLATE AND DIAMETER OF RIVETS

Thickness of Plate	Diameter of Rivets	Thickness of Plate	Diameter of Rivets
$\frac{3}{8}$ inch	$\frac{5}{8}$ inch	$\frac{3}{4}$ "	$\frac{7}{8}$ inch
$\frac{7}{16}$ "	$\frac{5}{8}$ "	$\frac{13}{16}$ "	$\frac{7}{8}$ "
$\frac{1}{2}$ "	$\frac{3}{4}$ "	$\frac{7}{8}$ "	1 "
$\frac{9}{16}$ "	$\frac{3}{4}$ "	$\frac{15}{16}$ "	1 "
$\frac{5}{8}$ "	$\frac{3}{4}$ "	1 "	1 "
$\frac{11}{16}$ "	$\frac{7}{8}$ "		

The following Table 8 is condensed from one calculated by Professor Kent,* in which he assumes the shearing strength of the rivets to be four-fifths of the tensile strength of the plate per square inch, and the excess strength of the perforated plate to be 10 per cent.

*Kent's Mechanical Engineer's Pocket-Book, page 362.

TABLE 8

Thickness of Plate	Diameter of Hole	Pitch		Efficiency	
		Single Riveting	Double Riveting	Single Riveting	Double Riveting
Inches	Inches	Inches	Inches	Per Cent	Per Cent
3/8	7/8	2.04	3.20	57.1	72.7
7/16	1	2.30	3.61	56.6	72.3
1/2	1	2.14	3.28	53.3	70.0
1/2	1 1/8	2.57	4.01	56.2	72.0
9/16	1	2.01	3.03	50.4	67.0
9/16	1 1/8	2.41	3.69	53.3	69.5
9/16	1 1/4	2.83	4.42	55.9	71.5
5/8	1	1.91	2.82	47.7	64.6
5/8	1 1/8	2.28	3.43	50.7	67.3
5/8	1 1/4	2.67	4.10	53.3	69.5

Another table of joint efficiences as given by Dr. Thurston* is as follows, slightly condensed from the original calculation:

TABLE 9

Single riveting								
Plate thickness.	5/16''	3/8''	7/16''	1/2''	5/8''	3/4''	7/8''	1''
Efficiency	.55	.55	.53	.52	.48	.47	.45	.43

Double riveting						
Plate thickness.	3/8''	7/16''	1/2''	3/4''	7/8''	1''
Efficiency.....	.73	.72	.71	.66	.64	.63

The author has been at considerable pains to compile Tables 10, 11 and 12, giving proportions and efficiencies of single lap, double lap and butt, and triple-riveted butt joints. The highest authorities have been consulted in the computation of these tables and great care exercised in the calculations.

* Thurston's Manual of Steam Boilers, page 119.

TABLE 10

PROPORTIONS OF SINGLE-RIVETED LAP JOINTS

Thickness of Plate Inches	Diameter of Rivet Inches	Pitch of Rivet Inches	Efficiency Per Cent
5/16	9/16	1.13	50.5
"	5/8	1.33	53.3
"	11/16	1.55	55.7
3/8	3/4	1.60	53.3
"	7/8	2.04	57.1
7/16	7/8	1.87	53.2
"	1	2.30	56.6
1/2	1	2.14	53.3
"	1 1/8	2.57	56.2
9/16	1	2.01	50.4
"	1 1/8	2.41	53.3
"	1 1/4	2.83	55.9
5/8	1 1/8	2.28	50.7
"	1 1/4	2.67	53.3

It will be noticed that in single-riveted lap joints the highest efficiencies are attained when the diameter of the rivet hole is about 2⅓ times the thickness of the plate, and the pitch of the rivet 2⅜ times the diameter of the hole.

With the double-riveted joint it appears, according to Table 11, that in order to obtain the highest efficiency the joint should be designed so that the diameter of the rivet hole will be from 1¾ to 2 times the thickness of plate, and the pitch should be from 3⅓ to 3½ times the diameter of the hole. Concerning the thickness of plates Dr. Thurston has this to say:* "Very thin plates cannot be well caulked, and thick plates cannot be safely riveted. The limits are about ¼ of an inch for the lower limit, and ¾ of an inch for the higher limit." The riveting machine, however, overcomes the difficulty with very thick plates.

*Thurston's Manual of Steam Boilers, page 120.

TABLE 11

PROPORTIONS OF DOUBLE-RIVETED LAP AND BUTT JOINTS

Thickness of Plate	Diameter of Rivet	Pitch of Rivet	Efficiency
5/16 inch	9/16 inch	1.71 inches	67.1 per cent
5/16 "	5/8 "	2.05 "	69.5 "
3/8 "	3/4 "	2.46 "	69.5 "
3/8 "	7/8 "	3.20 "	72.7 "
7/16 "	3/4 "	2.21 "	66.2 "
7/16 "	7/8 "	2.86 "	69.4 "
7/16 "	1 "	3.61 "	72.3 "
1/2 "	1 "	3.28 "	70.0 "
1/2 "	1 1/8 "	4.01 "	72.0 "
9/16 "	1 "	3.03 "	67.0 "
9/16 "	1 1/8 "	3.69 "	69.5 "
9/16 "	1 1/4 "	4.42 "	71.5 "
5/8 "	1 1/8 "	3.43 "	67.3 "
5/8 "	1 1/4 "	4.10 "	69.5 "
3/4 "	1 "	2.50 "	72.0 "
7/8 "	1 1/8 "	3.94 "	74.2 "
1 "	1 1/4 "	4.10 "	76.1 "

The triple-riveted butt joint with two welts, one inside and one outside, has two rows of rivets in double shear and one outer row in single shear on each side of the butt, the pitch of rivets in the outer rows being twice the pitch of the inner rows. One of the welts is wide enough for the three rows of rivets each side of the butt, while the other welt takes in only the two close pitch rows.

When properly designed, this form of joint has a high efficiency, and is to be relied upon. Table 12 gives proportions and efficiencies, and it will be noted that the highest degree of efficiency is shown when the diameter of rivet hole is from 1¼ to 1½ times the thickness of plate, and the pitch of the rivets is from 3½ to 4 times the diameter of the hole. This, of

course, refers to the pitch of the close rows of rivets, and not the two outer rows.

TABLE 12

PROPORTIONS OF TRIPLE-RIVETED BUTT JOINTS WITH INSIDE AND OUTSIDE WELT

Thickness of Plate Inches	Diameter of Rivet Inches	Pitch of Rivet Inches	Pitch of Outer Rows Inches	Efficiency Per Cent
3/8	13/16	3.25	6.5	84
7/16	13/16	3.25	6.5	85
1/2	13/16	3.25	6.5	83
9/16	7/8	3.50	7.0	84
5/8	1	3.50	7.0	86
3/4	1 1/16	3.50	7.0	85
7/8	1 1/8	3.75	7.5	86
1	1 1/4	3.87	7.7	84

A few examples of calculations for efficiency will be given, taking the three forms of riveted joints in most common use. The following notation will be used throughout:

T.S. =Tensile strength of plate per square inch.
T = Thickness of plate.
C = Crushing resistance of plate and rivets.
A = Sectional area of rivets.
S = Shearing strength of rivets.
D = Diameter of hole (also diameter of rivets when driven).
P = Pitch of rivets.

In the calculations that follow T.S. will be assumed to be 60,000 lbs., S will be taken at 45,000 lbs., and the value of C may be assumed to be 90,000 to 95,000.

Fig. 20 shows a double-riveted lap joint. The style of riveting in this joint is what is known as chain riveting.

In case the rivets are staggered the same rules for calculating the efficiency will hold as with chain riveting, for the reason that with either style of riveting the unit strip of plate has a width equal to the pitch or distance p, Fig. 20.

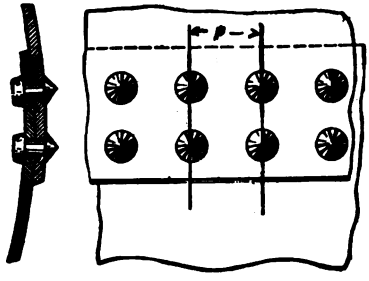

FIGURE 20

The dimensions of the joint under consideration are as follows: P = 3¼ in., T = $\frac{7}{16}$ in., D = 1 in. (which is also diameter of driven rivet).

The strength of the unit strip of solid plate is P × T × T.S. = 85,312.

The strength of net section of plate after drilling is P − D × T × T.S. = 59,062.

The shearing resistance of two rivets is 2A × S = 70,686.

The crushing resistance of rivets and plate is D × 2 × T × C = 78,750.

It thus appears that the weakest part of the joint is the

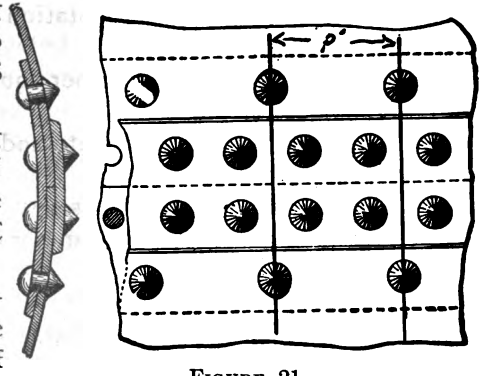

FIGURE 21

the net strip or section of plate, the strength of which is 59,062 and the efficiency = 59,062 × 100 ÷ 85,312 = 69.2 per cent.

A double-riveted butt joint is illustrated by Fig. 21, and the dimensions are as follows:

P, inner row of rivets = 2¾ in.

P′, outer row of rivets = 5½ in.

T of plate and butt straps = $\frac{7}{16}$ in.

D of hole and driven rivet = 1 in.

Failure may occur in this joint in five distinct ways, which will be taken up in their order.

1. Tearing of the plate at the outer row of rivets. The net strength at this point is $P - D \times T \times T.S.$, which, expressed in plain figures, results as follows: $5.5 - 1 \times .4375 \times 60{,}000 = 118{,}125$.

2. Shearing two rivets in double shear and one in single shear. Should this occur, the two rivets in the inner row would be sheared on both sides of the plate, thus being in double shear. Opposed to this strain there are four sections of rivets, two for each rivet. Then at the outer row of rivets in the unit strip there is the area of one rivet in single shear to be added. The total resistance, therefore, is $5A \times S$ as follows: $.7854 \times 5 \times 45{,}000 = 176{,}715$.

3. The plate may tear at the inner row of rivets and shear one rivet in the outer row. The resistance in this case would be $P' - 2D \times T \times T.S. + A \times S$ as follows: $5.5 - 2 \times .4375 \times 60{,}000 + .7854 \times 45{,}000 = 127{,}218$.

4. Failure may occur by crushing in front of three rivets. Opposed to this is $3D \times T \times C$, or $1 \times 3 \times .4375 \times 95{,}000 = 124{,}687$.

5. Failure may occur by crushing in front of two rivets and shearing one. The resistance is represented by $2D \times T \times C + 1A \times S$; expressed in figures, $1 \times 2 \times .4375 \times 95{,}000 + .7854 \times 45{,}000 = 118{,}468$.

The strength of a solid strip of plate 5½ in. wide before drilling is $P' \times T \times T.S.$, or $5.5 \times .4375 \times 60{,}000 =$

144,375, and the efficiency of the joint is 118,125 × 100 ÷ 144,375 = 81.1 per cent.

A triple-riveted butt joint is shown in Fig. 22, the dimensions of which are as follows:

T = $\frac{7}{16}$ in.
D = $1\frac{1}{8}$ in.
A = .69 in.
P = $3\frac{3}{8}$ in.
P′ = $6\frac{3}{4}$ in.

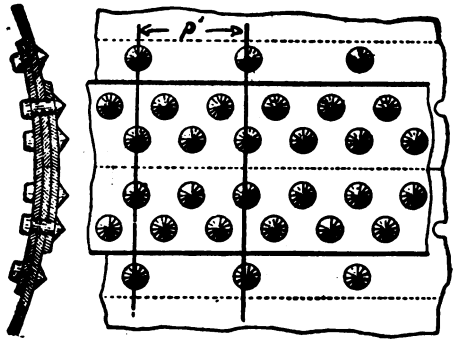

FIGURE 22

Failure may occur in this joint in either one of five ways.

1. By tearing the plate at the outer row of rivets, where the pitch is $6\frac{3}{4}$ in. The net strength of the unit strip at this point is P′ − D × T × T.S., found as follows: 6.75 − .9375 × .4375 × 60,000 = 152,578.

2. By shearing four rivets in double shear and one in single shear. In this instance, of the four rivets in double shear, each one presents two sections, and the one in single shear presents one, thus making a total of nine sections of rivets to be sheared, and the strength is 9A × S, or .69 × 9 × 45,000 = 279,450.

3. Rupture of the plate at the middle row of rivets and shearing one rivet. Opposed to this strain the strength is P′ − 2D × T × T.S. + 1A × S, equivalent to 6.75 − (.9375 × 2) × .4375 × 60,000 + .69 × 90,000 = 190.068.

4. Crushing in front of four rivets and shearing one rivet. The resistance in this instance is 4D × T × C +

1A × S, or .9375 × 4 × .4375 × 90,000 + .69 × 45,000 = 178,706.

5. Failure may be caused by crushing in front of five rivets, four of which pass through both the inside and outside butt straps, while the fifth rivet passes through the inside strap only, and the resistance is 5D × T × C, equivalent to .9375 × 5 × 90,000 = 184,570.

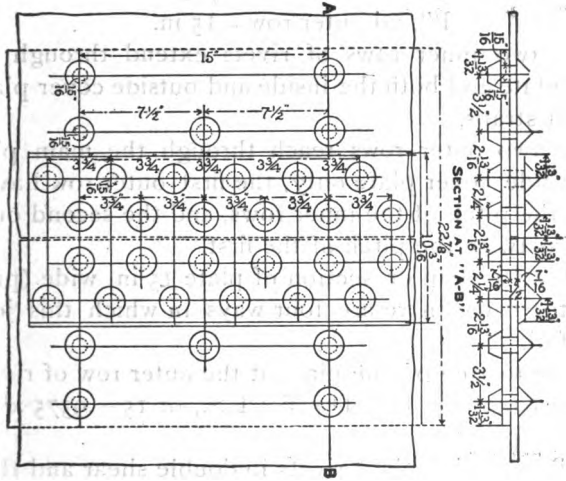

FIGURE 23

The strength of the unit strip of plate before drilling is P′ × T × T.S., or 6.75 × .4375 × 60,000 = 177,187, and the efficiency is 152,578 × 100 ÷ 177,187 = 86 per cent.

With the constantly increasing demand for higher steam pressures, the necessity for higher efficiencies in the riveted joints of boilers becomes more apparent, and of late years quadruple and even quintuple-riveted butt joints have in many instances come into use. The quadruple butt joint when properly designed shows a

high efficiency, in some cases as high as 94.6 per cent. Fig. 23 illustrates a joint of this kind, and the dimensions are as follows:

T = ½ in.
D = $\frac{15}{16}$ in.
A = .69 in.
P, inner rows = 3¾ in.
P′, 1st outer row = 7½ in.
P″, 2d outer row = 15 in.

The two inner rows of rivets extend through the main plate and both the inside and outside cover plates or butt straps.

The two outer rows reach through the main plate and inside cover plate only, the first outer row having twice the pitch of the inner rows, and the second outer row has twice the pitch of the first.

Taking a strip or section of plate 15 in. wide (pitch of outer row), there are four ways in which this joint may fail.

1. By tearing of the plate at the outer row of rivets. The resistance is $P'' - D \times T \times T.S.$, or $15 - .9375 \times .5 \times 60{,}000 = 421{,}875$.

2. By shearing eight rivets in double shear and three in single shear. The strength in resistance is $19A \times S$, or $.69 \times 19 \times 45{,}000 = 589{,}950$.

3. By tearing at inner rows of rivets and shearing three rivets. The resistance is $P'' - 4D \times T \times T.S. + 3A \times S$, or $15 - (.9375 \times 4) \times .5 \times 60{,}000 + .69 \times 3 \times 45{,}000 = 430{,}650$.

4. By tearing at the first outer row of rivets, where the pitch is 7½ in., and shearing one rivet. The resistance is $P'' - 2D \times T \times T.S. + A \times S$, or $15 - (.9375 \times 2) \times .5 \times 60{,}000 + .69 \times 45{,}000 = 424{,}800$.

It appears that the weakest part of the joint is at the

outer row of rivets, where the net strength is 421,875. The strength of the solid strip of plate 15 in. wide before drilling is $P'' \times T \times T.S.$, or $15 \times .5 \times 60{,}000 = 450{,}000$, and the efficiency is $421{,}875 \times 100 \div 450{,}000 = 93.7$ per cent.

Staying Flat Surfaces. The proper staying or bracing of all flat surfaces in steam boilers is a highly important problem, and while there are various methods of bracing resorted to, still, as Dr. Peabody says, "the staying of a flat surface consists essentially in holding it against pressure at a series of isolated points which are arranged in regular or symmetrical pattern." The cylindrical shell of a boiler does not need bracing, for the very simple reason that the internal pressure tends to keep it cylindrical. On the contrary, the internal pressure has a constant tendency to bulge out the flat surface. Rule 2, Section 6, of the rules of the U. S. Supervising Inspectors provides as follows: "No braces or stays hereafter to be employed in the construction of boilers shall be allowed a greater strain than 6,000 lbs per square inch of section."

The weakest portion of the crow foot brace when in position is at the foot end, where it is connected to the head by two rivets. With a correctly designed brace the pull on these rivets is direct and the tensile strength of the material needs to be considered only, but if the form of the brace is such as to bring the rivet holes above or below the center line of the brace, or if the rivets are pitched too far from the body of the brace, there will be a certain

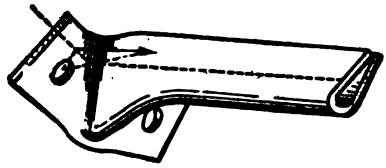

FIGURE 24

leverage exerted upon the rivets in addition to the direct pull. Fig. 24 shows a brace of incorrect design and Figs. 25 and 26 show braces designed along correct lines.

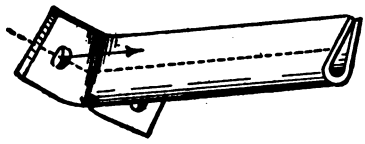

FIGURE 25

The problem of properly staying the flat crown sheet of a horizontal fire-box boiler, especially a locomotive boiler, is a very difficult one and has taxed the inventive genius of some of the most eminent engineers.

For simplicity of construction and great strength the cylindrical form of fire-box known as the Morison corrugated furnace has proved to be very successful. This form of fire-box was in 1899 applied to a locomotive by Mr. Cornelius Vanderbilt, at the time assistant superintendent of motive power of the New York Central and Hudson River R. R. This furnace was rolled of ¾-in. steel, is 59 in. internal diameter and 11 ft. 2¼ in. in length. It was tested under an external pressure of 500 lbs. per square inch before being placed in the boiler. It is carried at the front end by a row of radial sling stays from the outside plate, and supported at the rear by the back head. Figs. 27 and 28 show respectively a sectional view and an end elevation of this boiler. It will be seen at once that the question of stays for a fire-box of this type becomes very simple.

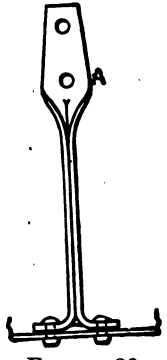

FIGURE 26

Calculating the Strength of Stayed Surfaces. In calculations for ascertaining the strength of stayed surfaces, or for finding the number of stays required for any

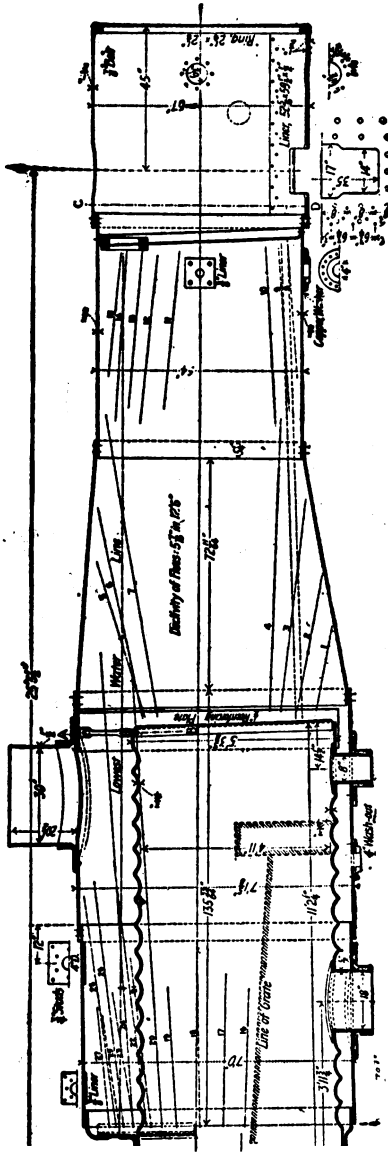

FIGURE 27

given flat surface in a boiler, the working pressure being known, it must be remembered that each stay is subjected to the pressure on an area bounded by lines drawn midway between it and its neighbors. Therefore the area in square inches, of the surface to be supported by each stay, equals the square of the pitch

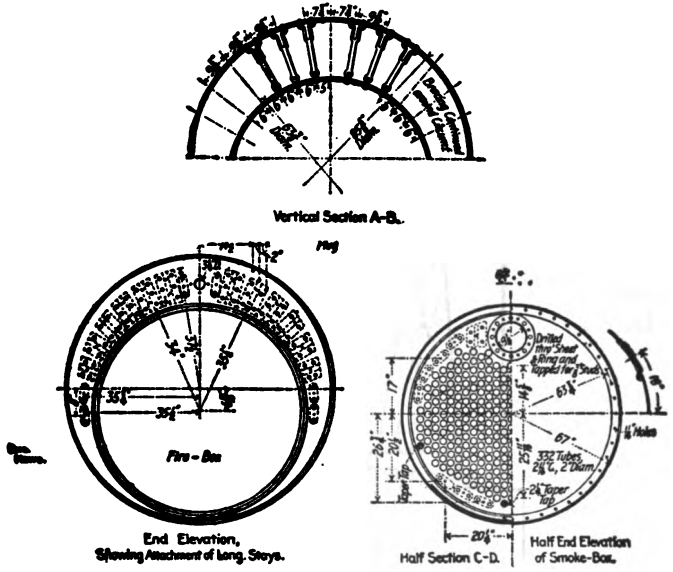

FIGURE 28

or distance in inches between centers of the points of connection of the stays to the flat plate. Thus, suppose the stays in a certain boiler are spaced 8 in. apart, the area sustained by each stay = 8 × 8 = 64 sq. in., or assume the stay bolts in a locomotive fire-box to be pitched 4½ in. each way, the area supported by each stay bolt = 4½ × 4½ = 20¼ sq. in.

The minimum factor of safety for stays, stay bolts

and braces is 8, and this factor should enter into all computations of the strength of stayed surfaces.

The pitch for stays depends upon the thickness of the plate to be supported, and the maximum pressure to be carried.

In computing the total area of the stayed surface it is safe to assume that the flange of the plate, where it is riveted to the shell, sufficiently strengthens the plate for a distance of 2 in. from the shell, also that the tubes act as stays for a space of 2 in. above the top row. Therefore the area of that portion of the flat head or plate bounded by an imaginary line drawn at a distance of 2 in. from the shell and the same distance from the last row of tubes is the area to be stayed. This surface may be in the form of a segment of a circle, as with a cylindrical boiler, or it may be rectangular in shape, as in the case of a locomotive or other fire-box boiler. Other forms of stayed surfaces are often encountered, but in general the rules applicable to segments or rectangular figures will suffice for ascertaining the areas.

By the use of Table 13 and the rule that follows, the area of the segmental portion of any boiler head may be ascertained.

Rule. Divide the height of the segment by the diameter of the circle. Then find the decimal opposite this ratio in the column headed "Area." Multiply this area by the square of the diameter. The result is the required area.

Example. Diameter of circle = 72 in. Height of segment = 25 in. $25 \div 72 = .347$, which will be found in the column headed "Ratio," and the area opposite this .24212. Then $.24212 \times 72 \times 72 = 1{,}255$ sq. in., area of segment.

TABLE 13

AREAS OF SEGMENTS OF A CIRCLE

Ratio	Area	Ratio	Area	Ratio	Area	Ratio	Area
.2	.11182	.243	.14751	.286	.18542	.329	.22509
.201	.11262	.244	.14837	.287	.18633	.33	.22603
.202	.11343	.245	.14923	.288	.18723	.331	.22697
.203	.11423	.246	.15009	.289	.18814	.332	.22792
.204	.11504	.247	.15095	.29	.18905	.333	.22886
.205	.11584	.248	.15182	.291	.18996	.334	.22980
.206	.11665	.249	.15268	.292	.19086	.335	.23074
.207	.11746	.25	.15355	.293	.19177	.336	.23169
.208	.11827	.251	.15441	.294	.19268	.337	.23263
.209	.11908	.252	.15528	.295	.19360	.338	.23358
.21	.11990	.253	.15615	.296	.19451	.339	.23453
.211	.12071	.254	.15702	.297	.19542	.34	.23547
.212	.12153	.255	.15789	.298	.19634	.341	.23642
.213	.12235	.256	.15876	.299	.19725	.342	.23737
.214	.12317	.257	.15964	.3	.19817	.343	.23832
.215	.12399	.258	.16051	.301	.19908	.344	.23927
.216	.12481	.259	.16139	.302	.20000	.345	.24022
.217	.12563	.26	.16226	.303	.20092	.346	.24117
.218	.12646	.261	.16314	.304	.20184	.347	.24212
.219	.12729	.262	.16402	.305	.20276	.348	.24307
.22	.12811	.263	.16490	.306	.20368	.349	.24403
.221	.12894	.264	.16578	.307	.20460	.35	.24498
.222	.12977	.265	.16666	.308	.20553	.351	.24593
.223	.13060	.266	.16755	.309	.20645	.352	.24689
.224	.13144	.267	.16843	.31	.20738	.353	.24784
.225	.13227	.268	.16932	.311	.20830	.354	.24880
.226	.13311	.269	.17020	.312	.20923	.355	.24976
.227	.13395	.27	.17109	.313	.21015	.356	.25071
.228	.13478	.271	.17198	.314	.21108	.357	.25167
.229	.13562	.272	.17287	.315	.21201	.358	.25263
.23	.13646	.273	.17376	.316	.21294	.359	.25359
.231	.13731	.274	.17465	.317	.21387	.36	.25455
.232	.13815	.275	.17554	.318	.21480	.361	.25551
.233	.13900	.276	.17644	.319	.21573	.362	.25647
.234	.13984	.277	.17733	.32	.21667	.363	.25743
.235	.14069	.278	.17823	.321	.21760	.364	.25839
.236	.14154	.279	.17912	.322	.21853	.365	.25936
.237	.14239	.280	.18002	.323	.21947	.366	.26032
.238	.14324	.281	.18092	.324	.22040	.367	.26128
.239	.14409	.282	.18182	.325	.22134	.368	.26225
.24	.14494	.283	.18272	.326	.22228	.369	.26321
.241	.14580	.284	.18362	.327	.22322	.37	.26418
.242	.14666	.285	.18452	.328	.22415	.371	.26514

TABLE 13—*Continued*

Ratio	Area	Ratio	Area	Ratio	Area	Ratio	Area
.372	.26611	.405	.29827	.438	.33086	.471	.36373
.373	.26708	.406	.29926	.439	.33185	.472	.36471
.374	.26805	.407	.30024	.44	.33284	.473	.36571
.375	.26901	.408	.30122	.441	.33384	.474	.36671
.376	.26998	.409	.30220	.442	.33483	.475	.36771
.377	.27095	.41	.30319	.443	.33582	.476	.26871
.378	.27192	.411	.30417	.444	.33682	.477	.3697[illegible]
.379	.27289	.412	.30516	.445	.33781	.478	.37071
.38	.27386	.413	.30614	.446	.33880	.479	.37171
.381	.27483	.414	.30712	.447	.33980	.48	.37270
.382	.27580	.415	.30811	.448	.34079	.481	.37370
.383	.27678	.416	.30910	.449	.34179	.482	.37470
.384	.27775	.417	.31008	.45	.34278	.483	.37570
.385	.27872	.418	.31107	.451	.34378	.484	.37670
.386	.27969	.419	.31205	.452	.34477	.485	.37770
.387	.28067	.42	.31304	.453	.34577	.486	.37870
.388	.28164	.421	.31403	.454	.34676	.487	.37970
.389	.28262	.422	.31502	.455	.34776	.488	.38070
.39	.28359	.423	.31600	.456	.34876	.489	.38170
.391	.28457	.424	.31699	.457	.34975	.49	.38270
.392	.28554	.425	.31798	.458	.35075	.491	.38370
.393	.28652	.426	.31897	.459	.35175	.492	.38470
.394	.28750	.427	.31996	.46	.35274	.493	.38570
.395	.28848	.428	.32095	.461	.35374	.494	.38670
.396	.28945	.429	.32194	.462	.35474	.495	.38770
.397	.29043	.43	.32293	.463	.35573	.496	.38870
.398	.29141	.431	.32392	.464	.35673	.497	.38970
.399	.29239	.432	.32941	.465	.35773	.498	.39070
.4	.29337	.433	.32590	.466	.35873	.499	.39170
.401	.29435	.434	.32689	.467	.35972	.5	.39270
.402	.29533	.435	.32788	.468	.36072		
.403	.29631	.436	.32887	.469	.36172		
.404	.29729	.437	.32987	.47	.36272		

Strength of Unstayed Surfaces. A simple rule for finding the bursting pressure of unstayed flat surfaces is that of Mr. Nichols, published in the Locomotive, February, 1890, and quoted by Professor Kent in his pocket-book. The rule is as follows: "Multiply the thickness of the plate in inches by ten times the tensile

strength of the material used, and divide the product by the area of the head in square inches." Thus:

Diameter of head = 66 in.
Thickness of head = 5/8 in.
Tensile strength = 55,000 lbs.
Area of head = 3,421 sq. in.

5/8 × 55,000 × 10 ÷ 3,421 = 100, which is the number of pounds pressure per square inch under which the unstayed head would bulge.

If we use a factor of safety of 8, the safe working pressure would be 100 ÷ 8 = 12.5 lbs. per square inch, but as the strength of the unstayed head is at best an uncertain quantity it has not been considered in the foregoing calculations for bracing, except as regards that portion of it that is strengthened by the flange.

In all calculations for the strength of stayed surfaces, and especially where diagonal crow foot stays are used, the strength of the rivets connecting the stay to the flat plate must be carefully considered. A large factor of safety, never less than 8, should be used, and the cross section of that portion of the foot of the stay through which the rivet holes are drilled should be large enough, after deducting the diameter of the hole, to equal the sectional area of the body of the stay.

Dished Heads. In boiler work where it is possible to use dished, or "bumped up" heads as they are sometimes called, this type of head is rapidly coming into use. Dished heads may be used in the construction of steam drums, also in many cases for dome-covers, thus obviating the necessity of bracing.

As there has been a constantly growing demand for an increase in the power of locomotives, and as the boiler is the source of power, builders have been constrained to change the design of locomotive boilers in

such manner as would bring about an enlargement of both the heating surface and the grate area. Consequently the old wagon top type of boiler, with the fire-box down between the drivers and close to the track, has been largely superseded by the modern straight-top boiler having a wide fire-box, which as applied to freight engines with low wheels is usually above the rear drivers, but as applied to passenger engines with high wheels is usually behind the rear drivers and supported by trailing wheels, as in "Atlantic 4-4-2," "Prairie 2-6-2" and the "Pacific 4-6-2" types. The introduction of the wide fire-box and consequent increase of great area has made it possible to

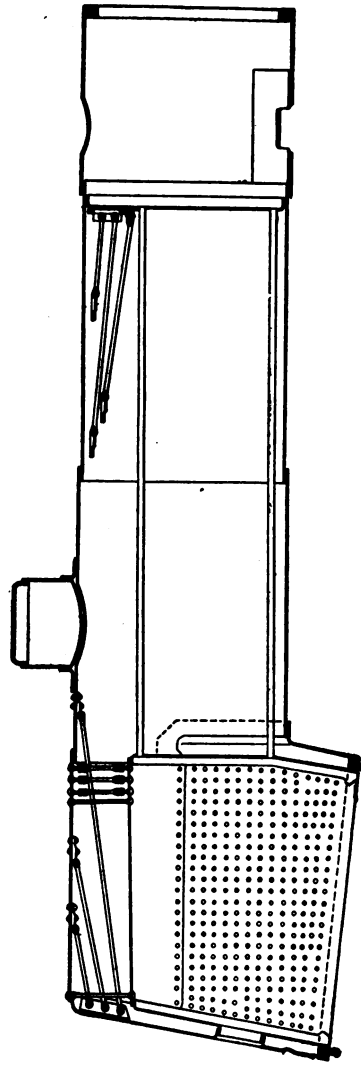

FIGURE 29. SECTION OF MODERN BOILER

burn cheaper grades of coal than was possible with the older type of boiler. It may be used (with some modifications) for both soft and hard coal.

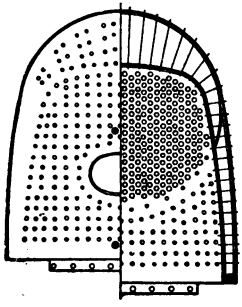

FIGURE 30

Fig. 29 shows a sectional elevation of a modern locomotive boiler, and Fig. 30 an end view of one-half of the flue sheet and one-half of the back head.

The staying of the heads and crown sheet is clearly illustrated. The general dimensions of the fire-box at the present time varies from 8 ft. to 10 ft. 4 in. in length, with a width of from 40 to 42 in., and a depth of 6 to 7 ft. in front, and 5 ft. 6 in. to 6 ft. 6 in. at the back, the size depending upon the type of engine and the kind of work it was designed to perform.

The diameter of the barrel or cylindrical portion of locomotive boilers built for train service varies all the way from 60 to 78 in., and some recent splendid examples of the locomotive builders' art have boilers 83 in. in diameter.

QUESTIONS

64. What are the four vital organs of a locomotive boiler?

65. Describe the mud ring.

66. Describe in general terms the fire-box.

67. How are the sides of the fire-box stayed?

68. Describe a stay bolt.

69. How far apart, center to center, are stay bolts usually spaced?

70. What causes stay bolts to break?

71. Why are stay bolts made hollow?

72. Describe the flexible stay bolt.

73. What advantage has a flexible stay bolt over a rigid one?

74. Is it necessary to strengthen the crown sheet by stays?

75. Why does the crown sheet need to be supported?

76. Name the three methods usually employed for staying the crown sheet.

77. Describe crown bars, and how applied.

78. Why is there a space preserved between the crown bars and top of crown sheet?

79. How are the crown bolts attached?

80. Why are thimbles placed between the crown bars and top of crown sheet?

81. Describe the radial system of staying the crown sheet.

82. What is the principal defect in this system?

83. Describe the Belpaire system.

84. What great advantage has this form of fire-box over others?

85. Why are crown sheets usually made to slope downwards from the front to the back end?

86. How are the heads of the boiler usually stayed?

87. What are diagonal crow foot stays?

88. How is the flue sheet braced?

89. What is a gusset stay, and how is it connected to the head and shell?

90. Why should the flue sheet be thicker than the shell?

91. What advantage is there in setting the tubes in vertical rows?

92. What is the usual diameter of locomotive tubes?

93. How are the tubes made water-tight in the sheet?

94. Describe the Prosser tube expander and method of using it.

95. Describe the Dudgeon roller expander.

96. How is it used?

97. What is meant by the expression tensile strength of a boiler sheet?

98. What is the usual tensile strength of steel boiler plate?

99. What should be the tensile strength of the rods from which rivets are made?

100. What is the shearing resistance of iron rivets?

101. What is the shearing resistance of steel rivets?

102. What is meant by the efficiency of a riveted joint?

103. What type of joint should be used for plates ½ in. thick or more?

104. Give the diameter of rivet pitch, and efficiency of a double-riveted joint.

105. What is the usual efficiency of single-riveted joints?

106. How should double-riveted joints be designed in order to obtain the highest efficiency?

107. Describe a triple-riveted butt joint.

108. How should a triple-riveted butt joint be designed in order to obtain the highest efficiency?

109. What is meant by the expression, the unit strip or net section of plate, as used in calculating the efficiency of a riveted joint?

110. What is the usual efficiency of the triple-riveted butt joint?

111. What efficiency per cent does the quadruple-riveted butt joint show when properly designed?

112. Why is it that the cylindrical portion of a boiler does not require to be stayed?

113. What effect does the pressure inside a boiler have upon flat surfaces, such as the heads, crown sheet, etc.?

114. Where is the weakest portion of a crow foot brace?

115. How is the area in square inches to be supported by each stay ascertained?

116. What is the minimum factor for stays and stay bolts?

117. What two factors govern the pitch for stays?

118. What portions of the heads do not need to be braced?

119. Is it possible to weld boiler seams?

120. Describe in general terms the modern locomotive boiler.

121. What are the general dimensions of the fire-box?

CHAPTER III

THROTTLE AND DRY PIPE

Having studied at some length the construction of the boiler and the generation of steam, it is now in order to examine into the method by which the steam is conveyed to the cylinders of the engine, where it, or rather the heat that it contains, performs its work. The main factors in the transmission of the steam from the boiler to the interior of the cylinders, and from there to the open air, are the throttle valve and pipe, the dry pipe, the steam pipes and passages, the valves and ports, the exhaust passages and ports, and the exhaust nozzles. These will each be described in regular order, with the exception of the valves and ports, which will be fully described in the chapters on valves and valve setting.

The steam dome O, Fig. 6, is a cylindrical chamber made of boiler plate and riveted to the top of the boiler, usually directly over the fire-box. The function of the dome is to serve as a steam chamber that is elevated as high as possible above the surface of the water in the boiler, in order that the steam supplied to the cylinders, all of which is drawn from this chamber, may be as dry as it is possible to have it.

The steam is conducted from the dome to the cylinders through the dry pipe P-Q-R, Fig. 6, which extends from the top of the dome to the front flue sheet or head of the boiler. Connected to the front end of the dry pipe, inside the smoke box, are two cast iron curved pipes 1-2, Fig. 31, called the steam pipes, which conduct the steam to the steam chests, or valve

chests as they are sometimes called. The horizontal portion of the dry pipe extending through the boiler is

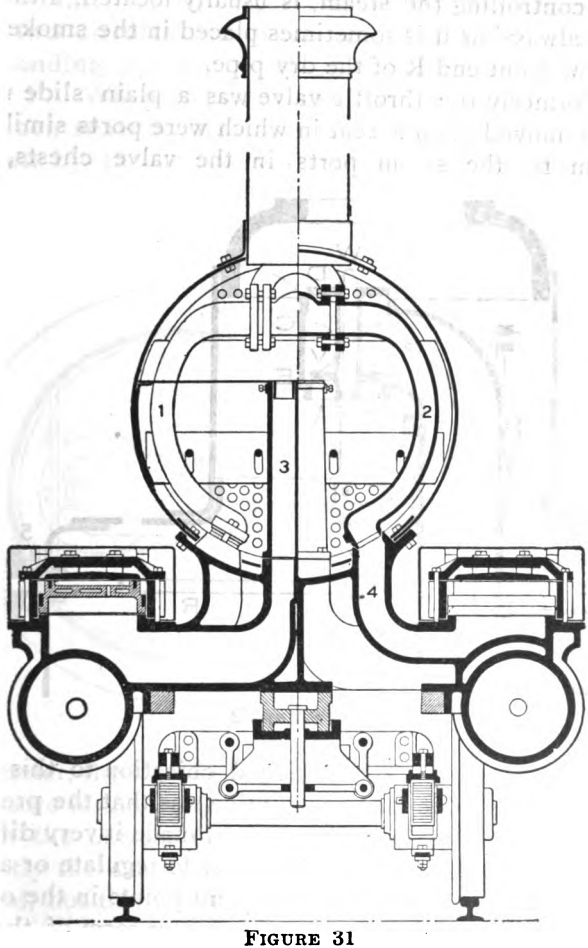

FIGURE 31

made of wrought iron, and the vertical portion T, Fig. 6, called the throttle pipe, and which is within the

dome, is made of cast iron. At the top end of this pipe, near the top of the dome, the throttle U, Fig. 6, for controlling the steam, is usually located, although not always, as it is sometimes placed in the smoke box at the front end R of the dry pipe.

Formerly the throttle valve was a plain slide valve that moved upon a seat in which were ports similar in form to the steam ports in the valve chests, but

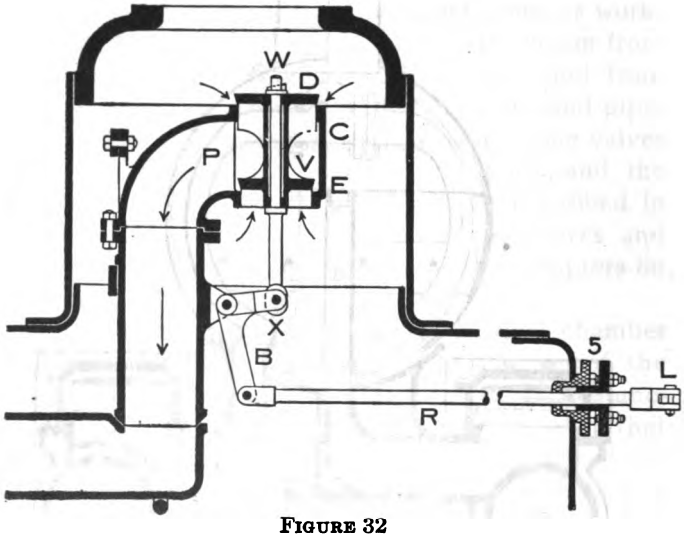

FIGURE 32

smaller in size. The principal objection to this type of throttle valve for a locomotive was that the pressure of the steam upon it when closed made it very difficult to open the throttle gradually, or to regulate or adjust it while open—two very important points in the operation of a locomotive. A much better form of throttle has been largely adopted in late years. This valve is shown at U, Fig. 6, and on a larger scale by Figs. 32

and 33, which give a sectional view and a plan of the throttle pipe, valve, and throttle lever.

The valve V, Fig. 32, is a double poppet valve, having two circular disks D and E, which cover two corresponding openings in the case C on the end of the pipe P. When the valve is raised and the disks are off their seats the steam flows in around their edges, as shown by the arrows. The disks are not the same

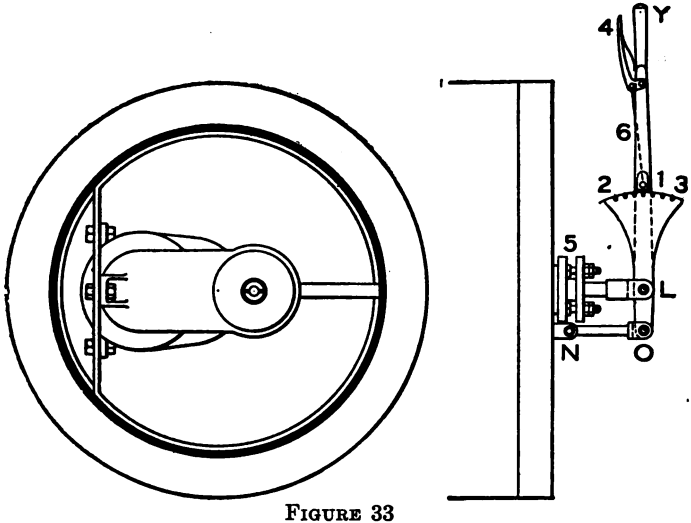

FIGURE 33

diameter, the top one being slightly larger. The steam pressure in the boiler acts upon the top of disk D and upon the bottom of disk E. If the two disks were exactly the same in diameter the valve would be balanced, but this is not desirable, as there might thus be a possibility of its being opened accidentally after the engineer had closed it. There is also another reason why the lower disk must be smaller in diameter than

the upper one, viz., that it may be introduced through the top opening of the casing C, so as to cover the lower opening. There is thus a slightly greater pressure on the top surface of the upper disk tending to keep the valve closed, than there is on the bottom surface of the lower disk tending to raise the valve and open it. This arrangement of the parts causes the throttle to stay in any position it may be placed, while at the same time it moves comparatively easily. The means whereby the throttle is opened and closed are also shown in Figs. 32 and 33.

The stem W-X of the valve V extends downwards and connects with the upper arm of the bell crank B, Fig. 32. Connected to the lower arm of this bell crank, and extending through the back boiler head into the cab, is a rod R, called the throttle stem. This rod passes through a steam-tight stuffing box in the boiler head. The throttle lever Y, Fig. 33, is connected to the throttle stem at L and attached to a link N-O at O. This link is connected to the boiler head by a stud and pin at N, Fig. 33. The link is free to vibrate slightly, which enables the connection at L to move in a straight line. This provision causes the stem R, Fig. 32, to also move in a straight line in the stuffing box 5, which is very necessary in order that it may be kept steam-tight. Referring to Fig. 33, which is a plan view, the throttle lever Y is fitted with a latch 1 that gears into the curved rack 2-3, in order to hold the throttle in any required position. The latch 1 is operated by a trigger 4, connected by the rod.

The steam, being admitted by the throttle valve V into the throttle pipe P, passes on into the dry pipe P-Q-R, Fig. 6. This pipe, after passing through the front flue sheet of the boiler, is fitted with a T-pipe,

thus dividing it into two branches to which the steam pipes are connected. These connections, which are all within the smoke-box, are clearly illustrated in Fig. 31, to which reference is now made.

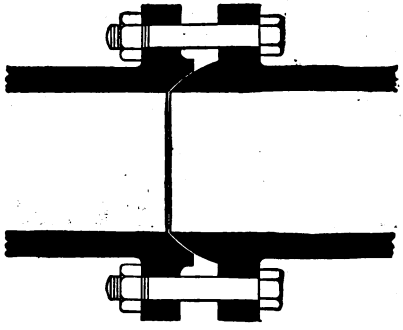

FIGURE 34

The steam pipes 1 and 2 are connected to each of the two branches of the T-pipe at their top ends and to the cylinder castings at their bottom ends. The steam is thus conducted to the valve chests. Fig. 31 shows a sectional view of one of the steam pipes, 2 on the right and a section of one of the exhaust pipes 3 on the left. The steam pipes are exposed to great changes of temperature as a result of their being within the smoke-box, and consequently the wide range of expansion and contraction to which they are subjected renders it very difficult to keep the joints tight.

Another difficulty is also generally encountered in the assembling of the various parts forming these connections, as, for instance, if the upper end of pipe 4 in the cylinder casting, Fig. 31, were either too near or too far from the center line of the engine it would be necessary to move the end of pipe 2, either to the right or to the left, in order to bring it in line for connecting to 4. It is therefore necessary that there be a certain degree of flexibility in these connections, and this is accomplished by the use of ball joints. Fig. 34 illustrates a ball joint. The end

of one of the pipes is turned into the form of a sphere or globe, and the end of the other pipe is formed into a corresponding concave shape, as shown in Fig. 34. This form of joint permits a lateral movement in either direction of the lower end of pipe 2 to bring it in line with the upper end of pipe 4.

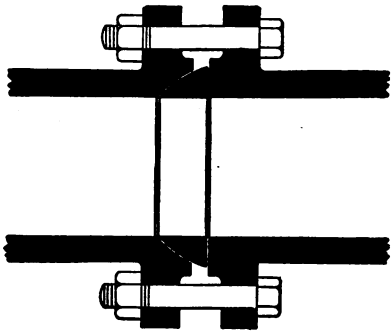

FIGURE 35

Another and still better form of flexible joint is illustrated in Fig. 35. In this joint a ring is interposed between the ends of the pipes. One side of this ring is spherical and the other side is flat, the ends of the pipes being shaped to correspond. With this form of joint the pipes are slightly adjustable in every direction, and the joints accommodate themselves to any and all motion that may be caused by expansion and contraction.

The exhaust pipes or nozzles are made of cast iron. Sometimes a single nozzle is used, such as shown in section in Fig. 36, having a partition at its base. In other cases two nozzles are used, which are generally cast together, as shown in section in Fig. 37.

Fig. 38 is a plan view of single and double nozzles. Rings or bushings are fitted in the outlet openings of these nozzles for the purpose of reducing their area and thereby increasing the draft. These bushings are made of various diameters and are easily removed in order to substitute others with larger or smaller openings as they may be required. If the exhaust orifice is

too large the draught through the tubes will not be sufficient. On the other hand, if the area of the exhaust opening is reduced too much the back pressure in the cylinders will be increased, thereby limiting the power of the engine. It is therefore necessary that

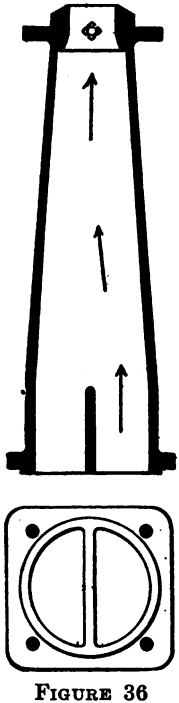

FIGURE 36

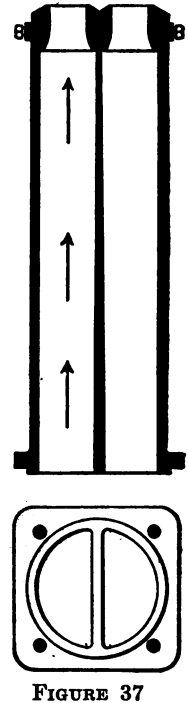

FIGURE 37

great care and good judgment be exercised in the adjustment of the exhaust nozzles.

Various devices have been invented for adjusting the area of the exhaust nozzles while the engine is working steam, but none has proved to be satisfactory, and the old method of adjustment when the engine is

not working is still in vogue. A few of the many devices that have been invented for regulating the draft will be described in this connection.

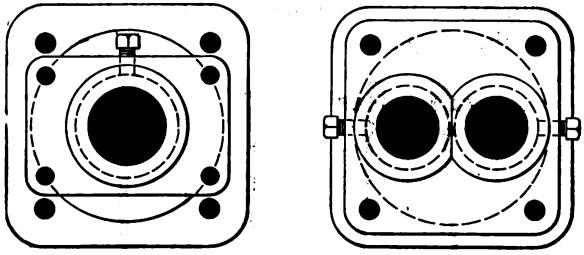

FIGURE 38

Fig. 39 shows a form of adjustable nozzle that appears to have considerable merit. It is the inven-

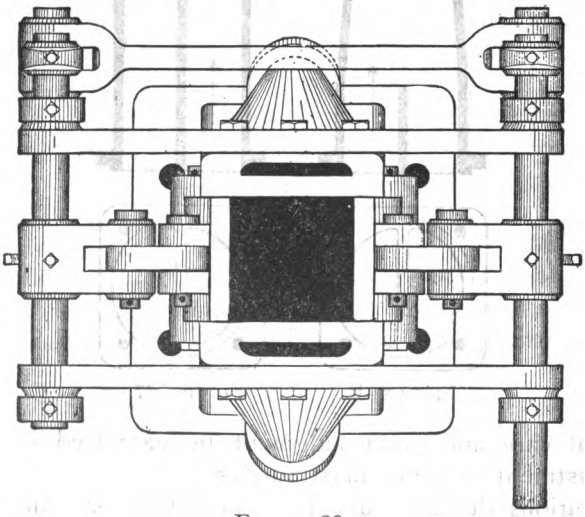

FIGURE 39

tion of Messrs. Wallace and Kellog, two engineers on the St. P., M. and O. R. R., and it has been used to

some extent on that road, also on the Duluth and Iron Range R. R. The device is automatic in its operation, the regulating mechanism being connected to the reverse lever, or the reach rod, in such a manner that as the lever is moved from the center notch towards either corner the area of the nozzle is increased one-half square inch for each notch. It may be set so that with the reverse lever in either corner there will be seven square inches more of nozzle area than there is with the lever in or near the center notch.

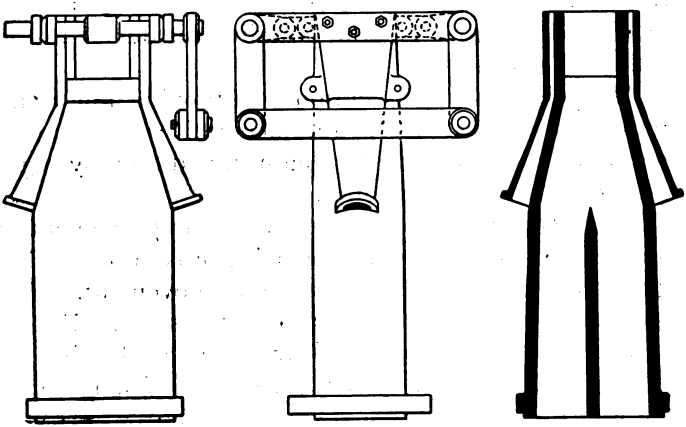

FIGURE 40

The nozzle areas for different positions of the reverse lever are as follows: Center notch, 22 sq. in.; second notch, 23 sq. in.; fourth notch, 24⅜ sq. in.; sixth notch, 25½ sq. in.; eight notch, 26$\frac{9}{16}$ sq. in.; tenth notch, 28½ sq. in., and in the corner, 29$\frac{11}{16}$ sq. in. The device is said to work satisfactorily and has shown a saving in fuel of from $59.00 to $97.00 per month over the ordinary nozzle.

Fig. 39 shows a plan and Fig. 40 an elevation, the cuts being self-explanatory.

The nozzle itself is square, and the adjustment is caused by two hinged ears which open as the reverse lever is moved from center towards corner and close as the lever is hooked back towards the center notch, so that the more steam that is being used the larger will be the nozzle area, and vice versa.

The De Lancey Exhaust Nozzle. This is another form of variable exhaust nozzle, as may be seen by the illustrations. It is the invention of Mr. John J. De Lancey, of Binghamton, N. Y., who describes his device in the following words:

"The object of my invention is to provide a new and improved exhaust nozzle for locomotives, serving to regulate the exhaust of the engines, and thereby regulating the draft in the boiler.

"Fig. 41 is a side elevation of the improvement as applied to a locomotive, parts being broken out. Fig. 42 is an enlarged plan view of the improvement. Fig. 43 is a transverse vertical section of the same. Fig. 44 is a sectional side elevation of the same on the line *x x* of Fig. 42, and Fig. 45 is a plan view of a modified form of the plate.

"The improved exhaust nozzle is provided with a plate B, fitted onto the upper end of the exhaust pipe C, which may be double, as is illustrated in Fig. 43, or single—that is, the two exhausts of the engines of the locomotive running into a single exhaust pipe.

"The plate B is provided with apertures D of the same size as the apertures at the upper ends of the exhaust pipe C, so that when the plate B is in a central or normal position the apertures D of the plate B fully register with the openings in the end of the exhaust

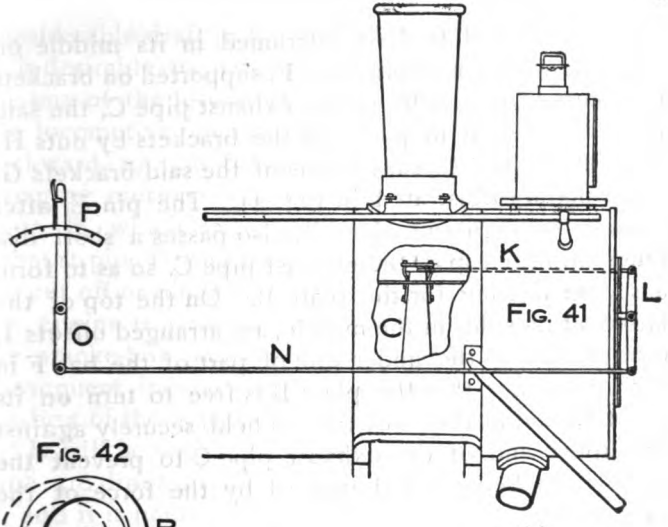

FIG. 41

FIG. 42

FIG. 44

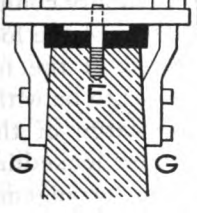

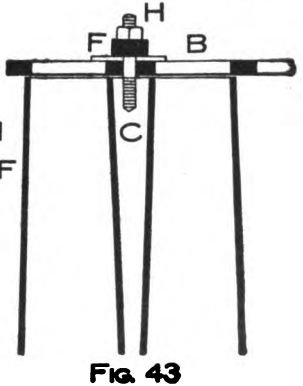

FIG. 43

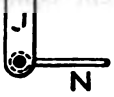

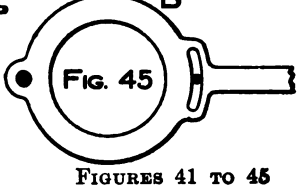

FIGURES 41 TO 45

nozzle. The plate B is fulcrumed in its middle on a pin E, projecting from a bar F, supported on brackets G, secured to the sides of the exhaust pipe C, the said plate being held in place on the brackets by nuts H, screwing on the threaded ends of the said brackets G, as is plainly illustrated in Fig. 44. The pin E, after passing through the plate B, also passes a short distance into the top of the exhaust pipe C, so as to form a secure bearing for the plate B. On the top of the latter, at its sides in the middle, are arranged offsets I, onto which fits the under side of part of the bar F in such a manner that the plate B is free to turn on its pivot E, and at the same time is held securely against the upper end of the exhaust pipe C to prevent the plate from being lifted upward by the force of the exhaust steam.

"From the plate B projects to one side an arm J, pivotally connected by a link K with a lever L, fulcrumed on the outside at the front end of the locomotive boiler, the link K passing through the said front end. The lever L is also pivotally connected by a link N, extending along the outside of the locomotive, with a lever O, pivoted on the cab of the locomotive and extending into the same so as to be within convenient reach of the engineer in charge of the locomotive. The lever O is adapted to be locked in place in any desired position by the usual arrangement connected with a notched segment P, as shown in Fig. 41.

"When the lever O stands in a vertical position, as illustrated in the said figure, the openings D in the plate B fully register with the openings in the exhaust pipe C. In this position the exhaust steam can pass freely out of the exhaust pipe C through the smokebox and smokestack of the locomotive, so as to cause

considerable draft in the fire-box of the boiler. When it is desirable to increase the amount of draft in the fire-box of the locomotive, the engineer in charge of the locomotive operates the lever O either forward or backward, so that the lever L swings and imparts a swinging motion by the link K and the arm J to the plate B, which latter moves across the top of the exhaust pipe C, and part of the openings of the latter are cut off or diminished in size, so that the exhaust of the engine is retarded, and consequently the draft in the smoke-box and smokestack is increased, so that a consequent increase of the draft takes place in the fire-box of the locomotive.

"It will be seen that the two openings in the exhaust pipe are diminished in size alike by moving the plate B, and it is immaterial in which direction the engineer moves the lever O, as the cut-off takes place either way."

Fig. 46 shows the Canby draft regulating apparatus, invented by Mr. Joseph C. Canby of Orange, Luzerne Co., Pa., and the following description of the device is furnished by the inventor himself:

"My invention relates to draft-regulating apparatus for locomotive and that class of boilers; and it consists of a smokestack with an adjustable petticoat or mouthpiece to equalize the draft through all the flues, also an arrangement of pipes and valves to introduce fresh air into the smokestack to check the draft without opening the fire door and letting the cold air in onto the boiler and tubes, thereby making a great saving in the fuel and being better for the boiler and flues."

Fig. 46 represents the front view of the boiler with the automatic draft-regulator attached. Fig. 47 is a horizontal section of front of boiler, showing smoke-

stack and rock shaft. Fig. 48 is a longitudinal section of the smoke-box and boiler, showing the connection of the valve N and regulator O and the connection of arm J to the cab K by the rod R.

A B C represent the sections of the smokestack, or, as familiarly called, "petticoats," arranged with lugs

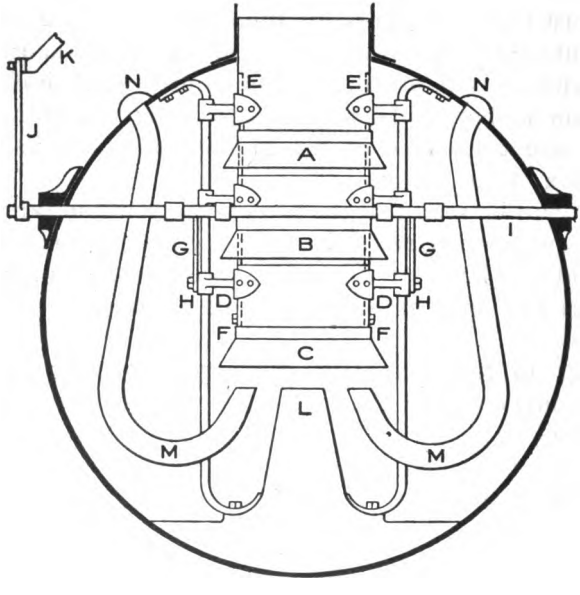

FIGURE 46

D on the sides with slides E E, having slots and set screws F F, by which they are adjusted to the space required between them, thereby enabling the engineer to equalize the draft in the fire-box, as experience shows that when the draft is nearest to the bottom of the smoke jacket the draft is strongest on the back end of the fire next the flue, and by decreasing there

and increasing it in the top flues the draft is made stronger in the front part of the fire-box. This more nearly equalizes the combustion of the fuel. The connecting rods G G are attached to the lugs H, and the arms S S project from the rocking shaft I, which is operated by the arm J and rod K,

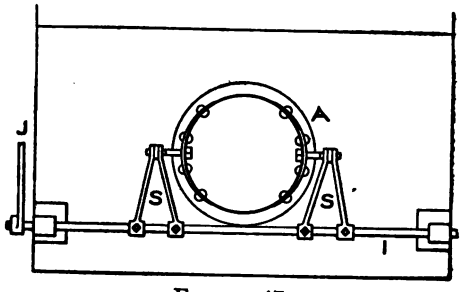

FIGURE 47

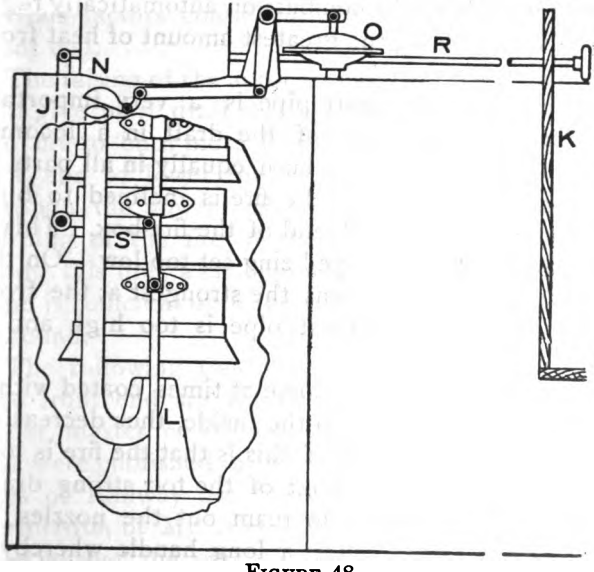

FIGURE 48

which runs to the cab R. By pulling or pushing the rod K the petticoats are raised and lowered, thus

increasing and decreasing the distance from the exhaust nozzle L, thereby increasing or diminishing the draft. The air tubes M M turn up alongside the exhaust nozzle L, and are opened and closed by valves N N on the outside of the boiler. The valves are operated by a pressure regulator O, so adjusted that they are opened by the steam when it passes a given pressure. This operates on the crank P and connecting rod Q to open the valve, thus admitting air to the smoke-box and decreasing the amount drawn through the tubes and decreasing the consumption of the coal, and obtaining the full benefit for all fuel consumed without letting the cold air in onto the hot iron. By this means we have the combustion automatically regulated, also obtaining the greatest amount of heat from the fuel consumed.

The petticoat or draft pipe is a very important factor in the regulation of the draft in a locomotive, so as to have the fire burn equally in all parts of the fire-box. Sometimes the fire is inclined to burn the strongest at the back end of the fire-box. This is caused by the draught pipe being set too low. On the other hand, if the fire burns the strongest at the front it shows that the petticoat pipe is too high and it should be lowered.

The exhaust nozzles become at times coated with a hard, gummy substance on the inside, thus decreasing their area, and the result of this is that the fire is torn and cut to pieces on account of the too strong draft. The remedy for this is to ream out the nozzles by means of a reamer having a long handle whereby it can be introduced through the stack.

Another device for regulating the draft is used in the extended smoke-box. This is a diaphragm placed

at an angle of 20 degrees usually, although some high authorities advocate placing it at 30 degrees. The gases impinge against the diaphragm, and are thus impeded in their passage to the stack, the flow being regulated by means of a diaphragm damper.

One very important requisite for obtaining good combustion and an even burning fire in a locomotive is that the exhaust should fill the stack, and not go through it like a shot out of a cannon, chopping the fire and carrying with it green coal and a large volume of gases that are unconsumed. Close observation and careful work are needed to guard against the great waste of fuel caused by an incorrect adjustment of the various factors contained within the smoke-box or front end.

The raising of the apron or damper on the diaphragm will give more draft through the top flues and cause the fire to burn more brightly at the back of the fire-box, and to lower the apron causes a stronger draft through the lower tubes and a consequent harder burning of the fire at the front. In experimenting along this line, a change of a quarter of an inch at a time is sufficient until the proper position for the apron is found.

The following timely observations on the locomotive front end are from the pen of Mr. K. P. Alexander, master mechanic of the Ft. S. and W. R. R., and were published in the May, June and July, 1905, issues of Railway and Locomotive Engineering. By permission of Mr. Angus Sinclair, editor of that valuable journal, the article is here inserted.

"For much of the data used in this paper I take pleasure in acknowledging indebtedness to Prof. W. F. M. Goss of Purdue University, and committee reports of

the American Railway Master Mechanics' Association for blue prints, reports, personal information, etc.

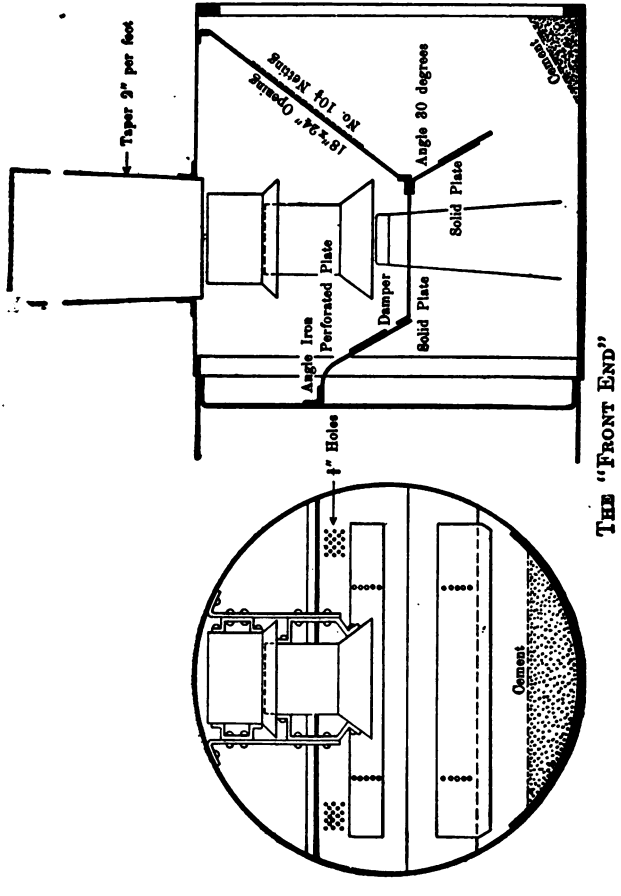

THE "FRONT END"

Without presuming to give as much detailed information, this article is intended to more completely embrace the known facts relating to the several parts

of the front end than any single report that has appeared.

The "front end" includes the diaphragm, the exhaust nozzle, the exhaust stand, the stack, the petticoat pipe, and the netting. These, with the exhaust jet, constitute an apparatus designed to produce the maximum amount of draft through the fire with the minimum of back pressure in the cylinders. The efficiency of the front end is therefore the greatest possible ratio of draft to back pressure.

The Diaphragm. The total draft is said to have three approximately equal factors of resistance to overcome: the diaphragm and netting, the flues, and the fire, grates and ash pan. As the diaphragm (or baffle plate) absorbs about one-third of the energy of the exhaust jet, the net efficiency of the front end is evidently increased as the angle of the diaphragm is changed from the usual angle of 20 degrees toward a more horizontal position, or to an angle of probably 25 degrees. Within certain limitations, the front end is also increased in efficiency by enlarging the area of opening under the diaphragm damper. Indeed, it is said that there are foreign railroads that have in some manner successfully dispensed with the diaphragm and yet secured equalization of draft over the entire fire-box.

The opening under the diaphragm damper must, however, be of such width horizontally as will allow of an area of opening equal to the total cross-sectional area of the opening through the flues, and at the same time be sufficiently contracted to retard the flow of gases from the fire-box long enough to consume as great a per cent of the gases as affecting conditions will permit. It must also be sufficiently contracted,

in self-cleaning front ends, to obtain enough velocity to keep the front clean of sparks. The diaphragm damper, or movable deflecting plate, must be set at such height as, with a given angle of the diaphragm, will produce a slightly stronger draft at the back than at the front end of the fire-box. The area of opening under the diaphragm should be greater for slow-burning than for free-burning coal, as, by diminishing the non-effective work that must be performed by the exhaust jet, the nozzle may be enlarged or a greater per cent. of its effective energy may be utilized in producing draft through the fire.

Draft through the fire in the back end of the fire-box is increased by increasing the angle of the diaphragm, or by raising the diaphragm damper, also by about four horizontal rows of holes punched in the upper end of the top section of the diaphragm. As the amount of draft is proportional to the weight of steam exhausted per unit of time, it is believed that differences in grate area do not materially change the volume of gases passing under the diaphragm. Contracted opening under the diaphragm, or through the grates, probably results in slight cylinder back pressure. When the area of opening under the diaphragm is enlarged by raising the diaphragm damper beyond a certain limit, the angle of the diaphragm must be decreased. The effect of wings projecting at each end of and below the diaphragm is to decrease the draft at the side sheets and to concentrate it along the center of the fire-box. The length of the horizontal part of the diaphragm (the distance between the upper and lower sections) does not affect the draft in either end of the fire-box.

The most efficient diaphragm should give the fol-

lowing: most rapid rate of combustion, slightly stronger draft at the back than at the front end of the fire-box, sufficiently baffle the flow of gases so as to result in the most complete combustion that the affecting conditions will allow, with minimum resistance to the exhaust jet.

Such a diaphragm should have an angle of about 25, instead of 20 degrees. Just below the arc of a 5-in. radius bend in the top end of the upper section should be punched about four horizontal rows of ⅜-in. holes with ⅜-in. centers, extending across the upper section a distance equal to the distance between the steam pipe centers at that height. An adjustable damper should be applied, to regulate the area of opening through the holes, in order that the proper degree of draft may be obtained in the back end of the fire-box. On the back side of both sections of the diaphragm should be bolted perforated steel plate with $\frac{3}{16} \times 1\frac{1}{2}$ in. mesh, set with slots vertical.

The object in increasing the angle of the diaphragm from 20 degrees (the usual angle) to 25 degrees, is to diminish the resistance to the exhaust jet. But, with such a change in angle, the four rows of ⅜-in holes in the upper section are necessary in order to increase the draft in the back end of the fire-box as much as the change of angle increased it in the front end of the fire-box. The perforated steel plate bolted to tne back side of the diaphragm very materially assists in breaking up the cinders as they strike it at an angle, thus considerably increasing their facility in passing through the netting and decreasing the liability of starting fires. This is equivalent to increasing the netting area or enlarging the opening of the mesh, and therefore lessens the total amonnt of work that must

be performed by the exhaust jet. The horizontal plate of the diaphragm should always, regardless of the height of the exhaust stand, for self-cleaning front ends, be located just under the top flange of the exhaust stand. In order to get in sufficient netting for free steaming this plate should never be set higher than 2 in. below the center line of the smoke-box, nor more than 6 in. below the top of the nozzle.

The Exhaust Jet and Nozzle. The most accurate, reliable and comprehensive data on the form, density and efficency of the exhaust jet, is contained in the 1866 report of a committee of the American Railway Master Mechanics' Association, under the chairmanship of Robert Quayle of the Chicago and Northwestern Ry. The matter in this paper referring to the exhaust jet, especially the measurements of vacuum and pressure in stack and front end, is largely based on that report.

The cross-sectional form of the exhaust jet is influenced by the form and dimensions of the channel surrounding it, even though not in actual contact. It is supposed that, in the stack, the vacuum around the column of the exhaust tends to compact it and thus prevent contact with the stack until it reaches nearly to the top of the stack. Whether this is true or not, personal experiments indicate that when the surrounding channel is within a certain distance of a column of steam issuing from a taper nozzle, the jet is apparently attracted to and comes in actual contact with the enclosing channel. Accurate tests made by the Master Mechanics' Association Committee show beyond question that the exhaust jet does not, and preferably should not, fill the stack at or near its base, but that it comes in contact with the stack only quite near the

top. The foregoing facts should be remembered in connection with calculating the diameter of petticoat pipes. The plan of the angle of the exhaust jet is not like an inverted frustrum with sides of straight lines, as is commonly supposed. Its form, between the nozzle and its point of contact with the stack, is represented by two slightly concave curved lines. It is in actual contact with the stack only about 10 or 12 in.

Vacuum gauges (measured in inches of water) show that the vacuum between the wall of the stack and the column of the exhaust jet, at a point one-third of the length of the stack from its top, is 1.50, midway of its length it is 2.52, and at about 17 in. from its base it is 3.61. At a point midway between the smoke-box circumference and the nozzle, on a line with the center of the arch, the vacuum is 2.54.

The pressures in the center of the exhaust jet are, at about 12 in. above the nozzle, 59.3; 24 in. above the nozzle, 44.6, and about 6 in. below the top of the arch, 28.5. The gauge also showed that the pressure diminished rapidly as it was moved from the center toward the circumference of the jet, varying in velocity from 576 to 292 ft. per second. Increasing the number of pounds of steam exhausted per unit of time, or increasing the boiler pressure, increases the velocity and diminishes the spread of the jet, resulting in increasing the vacuum.

The direction of the gases in every part of the smoke-box and stack is from the nozzle tip up toward the exhaust jet, and not directly toward the stack. The smoke-box gases and sparks are slightly enfolded within, but largely entrained by the exhaust jet. The induced action of the jet is greatest and the intermixing or enfolding action least, at the nozzle. It is

believed that as the mixing action is increased the induced action is diminished, with no resulting gain, and that therefore the more compact the jet the higher will be its net efficiency.

It is claimed that the efficiency of the jet is unchanged, providing the weight of steam exhausted per unit of time is equal, whether the engine is working at long cut-off with heavy impulses of the exhaust at long intervals, or working at short cut-off with quicker or lighter impulses at shorter intervals. The nozzle diameter should be as great as affecting conditions will permit.

Increasing the rate of combustion by undue contraction of the nozzle or grate area results in considerable decrease in evaporation per pound of coal. This is due to back pressure in the cylinders and to excessive spark losses and incomplete combustion of the gases in the fire-box. Increasing the rate of combustion per square foot of grate surface per hour from 61.4 to 240.8 lbs., decreased the evaporative efficiency 19.2 per cent and increased the pounds of sparks per hour from 46 to 160 lbs.

There is doubt as to whether a splitter or bridge in the nozzle is of any benefit under any possible conditions. However, apparently good results have been obtained by enlarging a nozzle equal to the cross-sectional area of a ¼-in. or ⅜-in. splitter, when such splitter was placed in the top of the nozzle at right angle to the partition in the exhaust stand. Any possible advantage of such a bridge would be its effectiveness in overcoming the form of the exhaust (in an exaggerated form represented by the shape of a figure 8) due to the action of the exhaust jet in exhausting somewhat from side to side instead of exactly vertical,

this being due to the deflecting influence of the exhaust stand partition and the inner angle of the nozzle.

The most efficient form of exhaust nozzle is the single one, with its interior in the form of a frustrum of a cone, ending at the top end with a parallel cylinder 2 in. long. The distance from the nozzle to choke of 14-in. stack 52 in. long, on a 58-in. front end, should not exceed 50 in. or be less than 40 in., for maximum efficiency. The distance from nozzle to top of smoke arch with a 14-in. straight stack 52 in. long should not be less than 22 in. nor greater than 38 in. The distance from nozzle to top of arch with a 16-in. straight stack 52 in. long should not be less than 28 in. nor greater than 38 in. The distance between nozzle and choke of stack should be slightly increased for the highest steam pressure.

The Exhaust Stand. The cross-sectional area of choke in each side of exhaust stands (when choked at all) should at least equal the area of the largest nozzle that may be applied. Bulged, or pear-shaped, stands are objectionable on account of interfering with the free passage of the gases from under the diaphragm damper. Stands should be not less than 19 in. high. They should have a partition in them to prevent the exhaust from one side effecting back pressure in the other side of the engine, but such partition should not be less than 8 in. nor more than 12 in. high, and it should not extend a greater height than to a point 10 in. from the top of the stand.

The Stack. For a 54-in. front end, the highest efficiency is obtained by a tapered stack, tapered 2 in. per foot, with its smallest diameter a distance of 17½ in. from its base. The greater the height of stack the greater will be its efficiency. Tapered stacks, whether

long or short, should equal in diameter at inside of choke one-fourth of the diameter of the arch. The diameter of the stack should be diminished as the nozzle is raised.

Professor Goss gives the following formula for determining correct nozzle heights. H equals height of stack, h equals distance in inches between center line of boiler and nozzle, d equals diameter of choke of stack, and D equals diameter of front end.

Formula for Tapered Stacks. When nozzle is below center line of boiler: $d = .25\ D + .16\ h$. When nozzle is above center line of boiler: $d = .25\ D - .16\ h$. When nozzle is on center line of boiler: $d = .25\ D$.

Formula for Straight Stacks. When nozzle is below center line of boiler: $d = (.246 + .00123\ H)\ D + .19\ h$. When nozzle is above center line of boiler: $d = (.246 + .00123\ H)\ D - .19\ h$.

The Petticoat Pipe. As a means of increasing the induced action of the exhaust jet, rather than as a means of equalizing front and back the draft on the fire, double petticoat (or draft) pipes add to the efficiency of the front end. When the distance between the nozzle and the choke of the stack (the top of the arch, with a straight stack) is not great enough to make a double pipe practicable, a single pipe is beneficial. The efficiency of the draft pipe is mainly due to its forming a longer orifice through which the exhaust must pass, thereby augmenting the induced action of the exhaust jet by solidifying it, it not being essential or desirable that the jet come in actual contact with the draft pipe. In fact, the pipe should be so large that the jet will not touch it.

In a 58-in. front end the best results were obtained with a 14-in. choke stack, choke 12 in. above top of

arch, nozzle 45 in. from choke, with a double petticoat pipe. The highest net efficiency was when the bottom end was set even with (but none below) the top of the nozzle. The top end of the upper section was set 13½ in. below the choke of the stack. The total distance from nozzle to top of upper section, in this position, was 28½ in. The smoke-box vacuum decreased as the distance was lengthened to 31 in., and the back pressure in the cylinders increased as the distance was shortened from 29 to 28 in. The double petticoat pipe used in above test was of following dimensions: lower section, 10 in. diameter by 11 in. long; upper section, 13 in. diameter by 10 in. long. The flare on lower section was 7 in. high by 17¼ in. diameter at bottom; flare on upper section was 2 in. high by 15 in. diameter at bottom end.

The Netting. No data is on record of the amount of resistance to the exhaust jet due to the front end netting, or perforated steel plate. The total area of netting should be as great, and its mesh as large, as conditions will, with safety, permit, as the open area is considerably reduced at each impulse of the exhaust by sparks in process of being broken up sufficiently small to pass through. As the direction of the sparks in the smoke box is from every point toward the column of the exhaust jet, instead of directly toward the stack, the netting should be set so that, as nearly as may be, the sparks will strike it at right angle to its face.

Although some railroads use coarser and some finer mesh, it is probable that the most preferable is netting with 2½ × 2½ mesh No. 10½ double crimped steel wire, or $\frac{5}{16}$ × 1½ in. perforated steel plate, with the plate set so that the slots run vertically instead of

horizontally. The chief objection to the perforated steel plate is that it necessarily contains less open area in proportion to its closed area than netting. A point in its favor, however, is that sparks cannot as easily wedge in the perforations as in the mesh of the netting."

Questions

122. What are the main factors in the transmission of the steam from the boiler to the cylinders?

123. Describe the steam dome.

124. What is the object in placing a dome on a locomotive boiler?

125. How is the steam conducted from the boiler to the cylinders?

126. Where are the steam pipes located?

127. Where is the throttle usually located?

128. Describe the old style of throttle.

129. What was the objection to such a throttle?

130. Describe in general terms the modern improved throttle.

131. Why is the lower disk smaller in diameter than the upper one?

132. What kind of a joint is used for connecting the steam pipes to the dry pipe within the smoke-box?

133. Describe a ball joint.

134. What other kind of joint is often used for making these connections?

135. What are the exhaust nozzles?

136. Why are rings or bushings usually fitted in the outlets of exhaust nozzles?

137. If the exhaust orifice is too large, what is the result?

138. What is the effect upon the fire if the exhaust outlet is too small?

139. What is an adjustable exhaust nozzle?

140. What is the function of the petticoat, or draft pipe?

141. If the draft pipe is set too low, how is the fire affected?

142. If the fire burns too strong at the front, what should be done with the draft pipe?

143. Why is it necessary to ream out the exhaust nozzles at times?

144. What other device for regulating the draft is placed in the extended smoke-box?

145. At what angle is the diaphragm usually placed?

146. What effect does this have upon the gases on their way to the stack?

147. How is regulation of the draft accomplished with the diaphragm?

148. What is a very important requisite for good combustion in a locomotive fire-box?

149. How does the raising of the apron or damper of the diaphragm affect the burning of the fire?

150. How will the fire be affected if the apron is lowered?

151. How much should the apron be moved up or down at a time, when making adjustments for draft?

CHAPTER IV

VALVES AND VALVE GEAR

In a certain "catechism" of the locomotive the following question and answer appear: "Q.. What is a locomotive? A. A locomotive is a boiler and two or more engines mounted on wheels." This answer, while not very definite, is certainly "short and to the point."

Two types of locomotive engines are in use, viz., simple and compound.

A simple engine, whether stationary or locomotive, is an engine in which the steam is made to do work in but one cylinder, after which it is exhausted into the atmosphere, or, as is the case with many stationary engines, the exhaust steam passes into a condenser in which a vacuum is maintained, and the steam is there condensed.

A compound engine is an engine in which the steam is made to do work in two or more cylinders before it is allowed to escape into the atmosphere or condenser. The expansive properties of the steam are thus utilized in a much higher degree than with the simple engine, and great economy in fuel is the result.

As an entire chapter is devoted to compound locomotives, the subject will not be enlarged upon at this stage, but the attention of the student will now be directed to a study of the valves, valve gear, etc., of a simple engine.

In Fig. 31, Chapter III, is given a sectional view through the smoke-box, saddle plate and cylinder castings of a simple engine, having a flat or D slide

valve. Figs 49 and 50 show respectively a front end view of the cylinder, valve chest and saddle plate castings, and a section through the same parts showing the steam and exhaust passages. These castings require to be of the best grade of iron, neither too soft nor too hard.

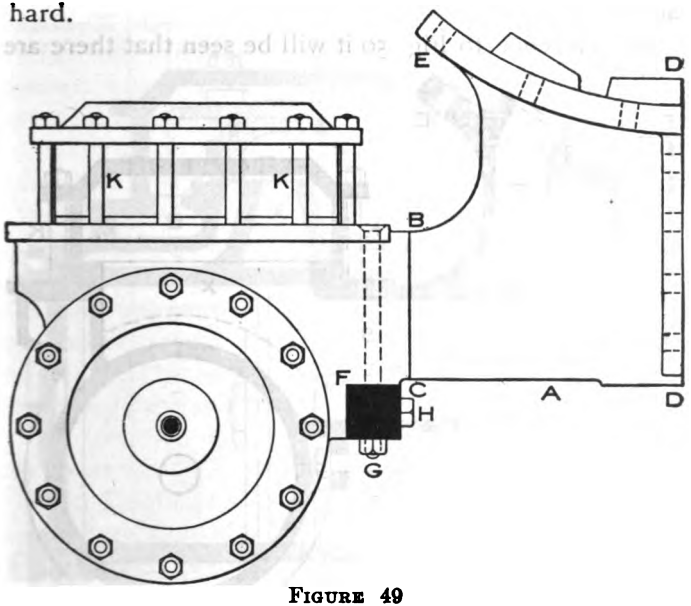

FIGURE 49

Cylinders and valve seats are generally cast together with the bed plates or bed castings A A, Figs. 49 and 50. Sometimes the bed castings are made separate from the cylinders and in one piece, and the cylinders are then bolted to it about at the line B C, Fig. 49. The usual practice, however, is to cast one-half of the bed casting with each cylinder and then bolt the two halves together at the line D D, this being the center line of the engine.

The bed castings are secured to the smoke-box by bolts through the flanges E E, and the cylinders are bolted to the frame F F by bolts G and H, Figs. 49 and 50. A structure is thus formed that is able to withstand the tremendous strains to which it will be subject.

By reference to Fig. 50 it will be seen that there are

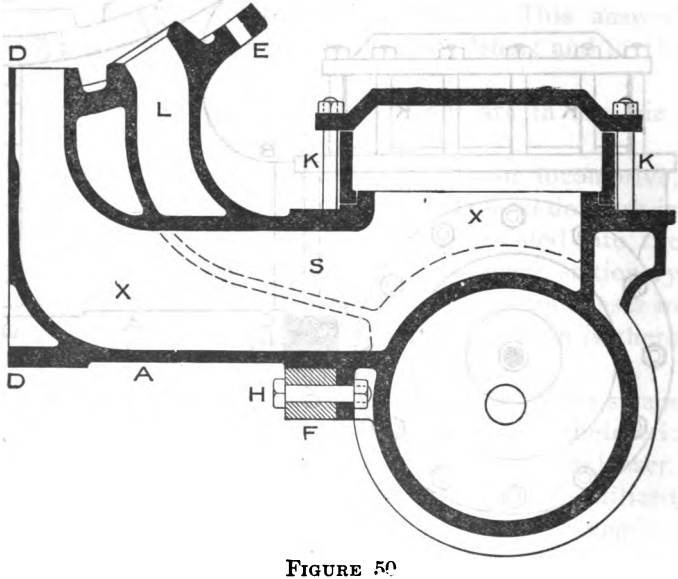

FIGURE 50

two passages in the bed casting leading to the cylinder. The one L S is the live steam passage, and to this is connected the steam pipe 84, Fig. 31, Chapter III, and the other one $x\ x$ is the exhaust passage leading from the cylinder to the smoke-box where the exhaust nozzle is attached.

Fig. 51 gives a longitudinal sectional elevation of the cylinder, valve chest, valve, etc., showing the

steam passages more clearly. Fig. 52 is a plan of the cylinder and guides and shows the valve seat with its ports, the steam chest cover and valve being removed. The steam passage A on approaching the steam chest is divided into two branches, which terminate in open-

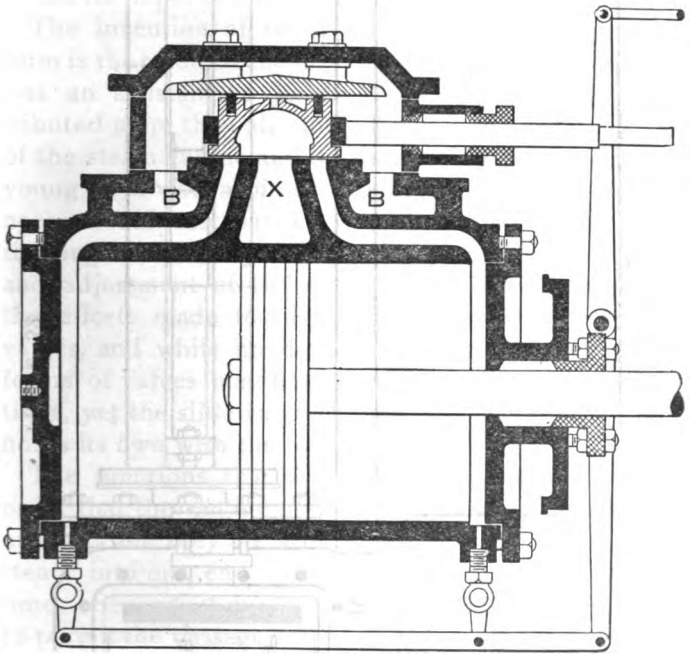

FIGURE 51

ings B B at each end of the valve seat (see Figs. 51 and 52). This causes the steam to be delivered at both ends of the steam chest and on top of the slide valve, which covers the ports P P and the exhaust port *x x* when in its central position (see Fig. 51).

The steam chest is a square cast iron box open at

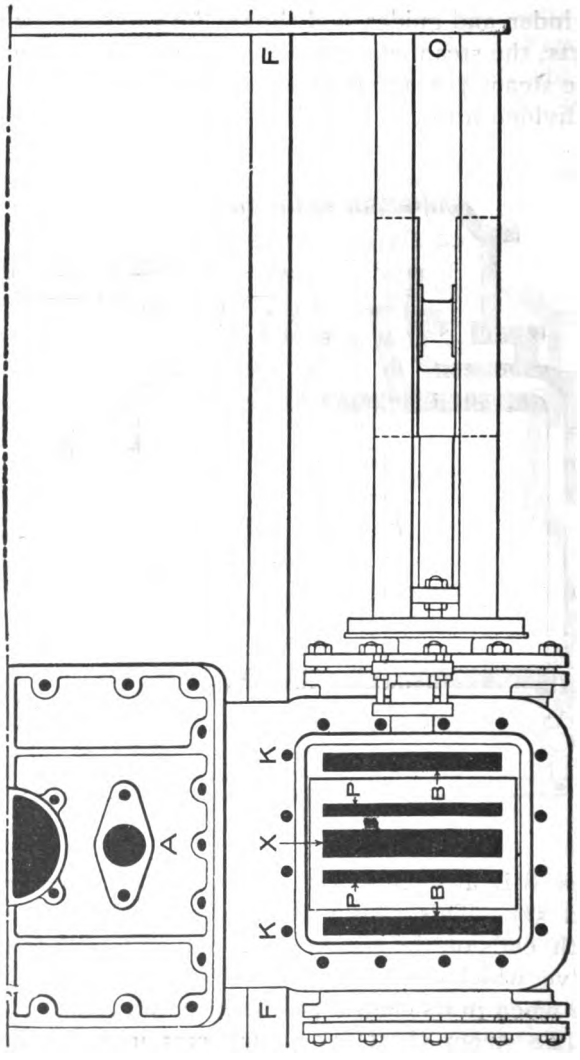

FIGURE 52

top and bottom and resting upon the top of the cylinder casting. The steam chest cover rests on top of this box and the whole is held down upon the cylinder by strong bolts K K, Fig. 49, forming a steam-tight joint, and within this valve chest the slide valve performs its important work.

The invention of the D slide valve in its present form is the result of the investigations of Murdoch, who was an assistant to James Watt, the man who contributed more than all others towards the development of the steam engine and its practical application. No young man who aspires to become a locomotive engineer should rest satisfied until he has obtained a thorough knowledge of the construction, operation, and adjustment of the slide valve. Many have been the efforts made to displace it with other types of valves, and while no doubt in stationary work other forms of valves may be better adapted to the conditions, yet the slide valve in some form or another still holds its own with the locomotive.

The functions that a slide valve must perform in order that the engine may do efficient work are five in number, and they are as follows: First, it must admit steam into one end only of the cylinder at the same time. Second, it must cover the steam ports so as not to permit the passage of live steam through both steam ports at the same time. Third, it must allow the steam to escape from one end of the cylinder before it is admitted at the other end, so as to give the steam that is to be exhausted time to escape before the piston commences the return stroke. Fourth, it must not permit live steam to enter the exhaust port direct from the steam chest. Fifth, it must close each steam port on the steam side before it is opened on the

exhaust side; this is for the purpose of utilizing the expansive force of the steam.

Figs. 53 to 58, inclusive, show the general construction of the D slide valve and illustrate the various positions assumed by it during one stroke. Fig. 53

FIGURE 53

shows the valve in its central position and explains the meaning of the word lap. Outside lap, often referred to as steam lap, is the distance that the edge of the valve overlaps the steam ports when it stands central or at mid-travel, and is that portion of the

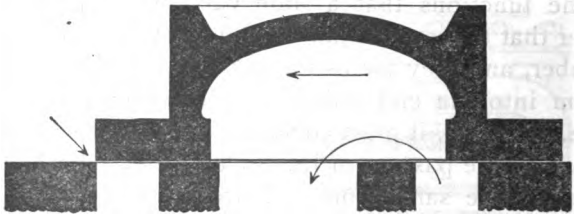

FIGURE 54

valve marked L and indicated by the distance between the lines O P. Inside lap, frequently referred to as exhaust lap, is that portion of the valve that overlaps the two bridges of the valve seat when the valve stands central, and is shown at A and A, Fig. 59.

Inside clearance, sometimes called exhaust lead, is the space between the inside edges of the exhaust arch of the valve and the bridges when the valve stands central. It means just the reverse of inside lap; that is, the distance between the inside edges of the exhaust

FIGURE 55

arch is slightly greater than the distance between the inside edges of the steam ports, so that it does not entirely cover them when in its central position. Inside clearance is shown at B and B, Fig. 60. The purpose of inside lap is to delay the release of the

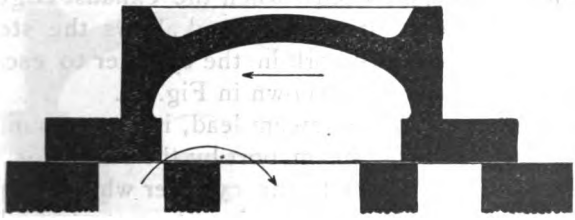

FIGURE 56

steam and to hasten compression. The amount of inside lap is small, seldom exceeding ⅛ of an inch, and for fast passenger engines it is better to have none, as it causes the engine to be quicker. The purpose of inside clearance is exactly the opposite to that of inside lap. It hastens release and delays compres-

sion. It rarely exceeds $\frac{1}{64}$ of an inch, and is only used on very fast running engines. Good judgment and great experience are required in order to determine the proper amount of inside clearance and upon what classes of locomotives it should be used.

In locomotives for ordinary service the valves have no inside clearance. Cut-off, Fig. 54, refers to the closing of the steam port by the valve, thereby cutting off the flow of live steam to the cylinder before the piston has completed its stroke. Compression refers to the early closure of the passage between the cylinder and the exhaust port. This point is reached when the inside or exhaust edge of the valve has closed the steam port, as shown in Fig. 55, wherein the valve is assumed to be traveling in the direction indicated by the arrow. A small portion of the steam is thus retained in the cylinder to be compressed by the advancing piston, which thus meets with a slight cushion at the end of its stroke, and all shock and jar is thus prevented. Release occurs when the exhaust edge of the valve opens the steam port and allows the steam that has completed its work in the cylinder to escape into the exhaust port, as shown in Fig. 56.

Lead, otherwise called steam lead, is the amount of opening given to the steam port by the valve for the admission of live steam to the cylinder when the piston is at the commencement of its return stroke. The lead is indicated by the letter A in Fig. 57.

Travel is the distance through which the valve travels, otherwise its stroke. Over travel is the distance the steam edge of the valve travels after the steam port is wide open, indicated by distance between lines O and T, Fig. 58.

The objects aimed at in giving a valve outside or

steam lap are: First, that the steam may be cut off before the piston reaches the end of its stroke, and the steam thus enclosed within the cylinder be made to do the work throughout the remainder of the stroke by reason of its expansive properties, and secondly, it

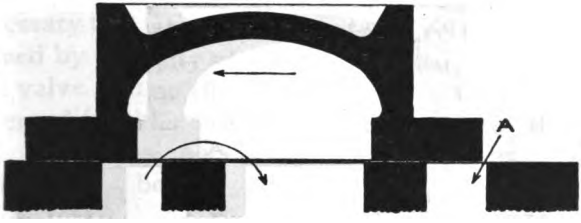

FIGURE 57

causes the exhaust port at one end of the cylinder to be opened before the steam port at the other end is uncovered for the admission of steam. If a valve had no outside lap it would admit steam throughout the whole stroke, or in other words, "follow full stroke."

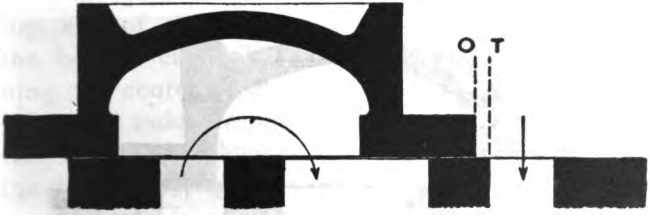

FIGURE 58

Another bad effect of no lap would be a late exhaust, by which is meant that the exhaust would occur at one end of the cylinder at practically the same moment that admission occurred at the other end. This would have a tendency to retard the motion of the piston.

The term clearance, as applied to a locomotive,

means all of the space between the face of the valve and the piston when the latter is at the end of its stroke. Mechanical clearance means the distance between the cylinder head and the piston when at the end of its stroke.

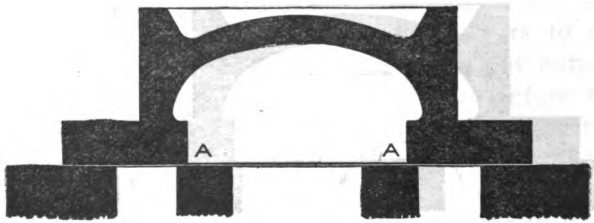

FIGURE 59

The object of giving a valve lead is that the steam port may be opened slightly for the admission of live steam just before the piston reaches the end of its stroke, in order that there may be a cushion of steam to receive the piston and reverse its motion at the end

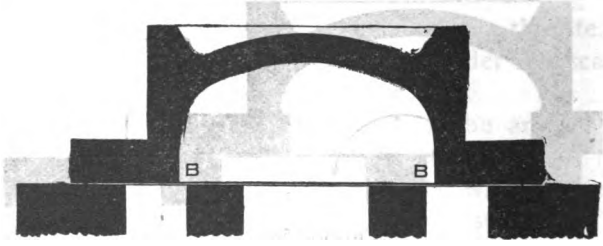

FIGURE 60

of the stroke, thus making the engine quicker in its action. Lead increases on a locomotive as the cut-off is made earlier or shorter, which is done by bringing the reverse lever nearer the center notch of the quadrant. The increased lead is caused by the radius of

the link. This will be explained later on, towards the close of this chapter.

The term valve gear, as applied to a locomotive, includes eccentrics, rods, links, rockers, etc., by which the valves are given motion and by which their movements are regulated and controlled. As it is very necessary that a locomotive should be capable of being moved by steam either backward or forward, a reversible valve gear is required. Various devices have been invented for this purpose, but the shifting link motion has, after many years' trial, been found to be the most reliable and best and is to-day the standard in this country.

Fig. 61 shows a general view of the valve gear of one side of a locomotive. The center of the go-ahead eccentric is shown at A, and the center of the back-up eccentric is at B. The eccentric straps are shown connected to the eccentric rods, or blades as they are usually termed, and these in turn are attached to the link, the go-ahead eccentric being connected to the top end of the link and the back-up eccentric to the bottom end. The link saddle S is a plate spanning the center of the link and securely bolted to it. Upon the saddle a pin is formed, to which the lower end of the link hanger is connected, the top end of the hanger being attached to the shorter arm of the tumbling shaft, while the other arm of the tumbling shaft is connected to the reversing rod which extends back to the cab and is connected to the reverse lever.

The link and ends of the eccentric rods connected to it are thus supported and are also free to be moved either up or down by means of the reverse lever. The link block, upon which the link slides freely, is attached by a pin to the lower arm of the rocker shaft,

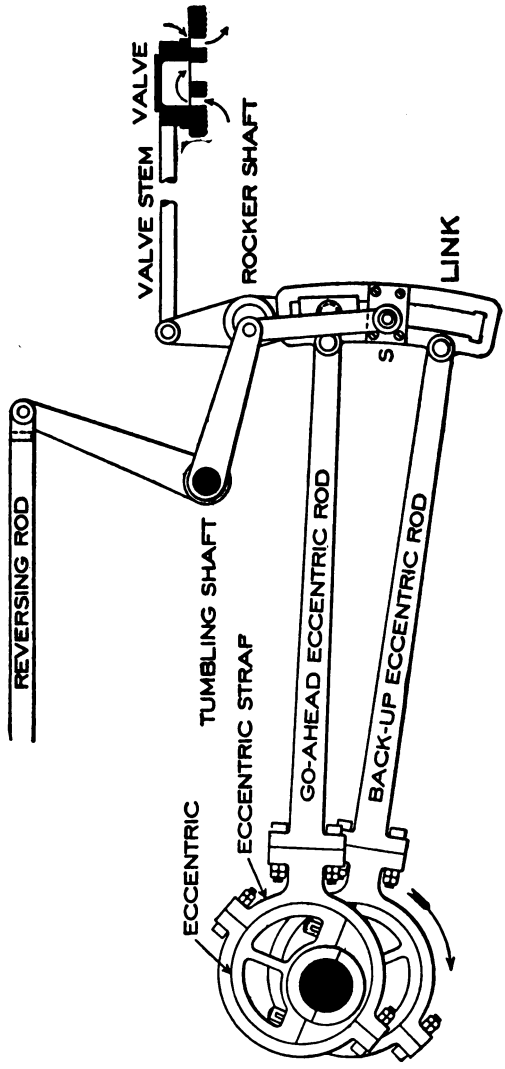
VALVE STEM
VALVE
ROCKER SHAFT
LINK
S
REVERSING ROD
TUMBLING SHAFT
ECCENTRIC STRAP
GO-AHEAD ECCENTRIC ROD
BACK-UP ECCENTRIC ROD
ECCENTRIC

FIGURE 61

and the valve rod is connected to the top arm of the rocker. The rocker shaft rotates in the rocker box, which is rigid, and the motion of the eccentric is thus indirectly imparted to the valve; that is, the motion of the eccentric is reversed by the rocker arm. This is termed indirect valve gear and is the standard type in this country, although there are some engines fitted with direct valve gear in which both arms of the rocker shaft extend upwards, or in the same direction, in which case the motion is not reversed.

The valve is connected to the valve stem usually by a yoke or frame that loosely embraces the top of the valve which is formed to receive it. This allows the valve to change its position vertically, with respect to the valve stem, as the face of the valve and the seat wear away. Sometimes the valve is secured by nuts that engage with a thread on the stem. In any case it is essential that the valve should have a small amount of freedom in its connection with the stem in order to guard against its becoming cocked or tilted on its seat, thus allowing the steam to blow past it.

The cut Fig. 61 shows the link in full forward gear; that is, the full throw of the go-ahead eccentric A affects the link block and rocker arm and through these the valve. By throwing the reverse lever back into the extreme back notch of the quadrant the link will be raised until the pin that connects the lower or backing eccentric blade to the link will be in line with the pin of the link block, which will then be affected by the full influence of the back-up eccentric B, and the engine will run backward.

It has been previously stated that the lead was increased by bringing the reverse lever nearer the center notch of the quadrant, or in common phrase-

ology "hooking her back," in order to cause cut-off to take place earlier, and that the increase in lead was due to the radius of the link. The radius of the link is the distance, on a horizontal line, from the center of the main driving shaft, which carries the eccentrics, to the center of the rocker shaft. Ordinarily an increase in the lead is obtained by moving the eccentrics ahead on the shaft, but in this case the eccentric straps are moved back on the eccentrics by raising the link, as will readily be seen by a study of the diagram, Fig. 61. The nearer the center of the link—that is, the center of the saddle pin—is brought to the center of the link block, the more are the eccentric straps moved back upon the eccentrics and the shorter will be the cut-off and the greater the lead.

With locomotives having very long eccentric blades there will not be such a marked increase in the lead as with those having very short blades, for the reason that the short rods will cause the straps to move farther around and back on the eccentrics by raising the link to which the ends of the rods are connected, whereas if the rods were longer their ends at the link could be raised considerably and still not materially affect the positions of the eccentric straps. This would indicate that in setting the valves of a locomotive, when it comes to adjustments for lead, attention should be paid to the radius of the link, which, as before stated, is the distance from the center of the main driving shaft to the center of the rocker shaft.

Authorities differ in regard to the amount of lead that locomotive valves should have at full gear. The older practice was to give an eighth of an inch, but of late years the tendency has been to cut it down to a sixteenth, or a thirty-second, and some authorities recom-

mend even negative lead, which means no lead at full gear. They claim that too much lead is detrimental to an engine, causing more wear and tear to the valve gear, also that the preadmission of steam is too great at mid-travel. With a 4-ft. radius the valves should be set line and line, (no lead) forward and back gear. With a 6-ft. radius one-sixteenth of an inch is required, and with a radius of 8 ft. the valves should have one-eighth of an inch positive lead forward and back gear. The travel of the valve is also reduced by hooking the reverse lever back from either full gear towards the center notch of the quadrant.

Questions

152. What is a simple engine?

153. What is a compound engine?

154. Why is a compound engine more economical in fuel than a simple engine is?

155. Describe the saddle plate of a locomotive.

156. How is this casting secured to the smoke box?

157. What supports the cylinders?

158. How does the steam pass from the steam pipes in the smoke-box to the valve chests?

159. Describe the steam chest.

160. Who invented the D slide valve?

161. How many functions must a slide valve perform?

162. What is the first of these?

163. What is the second function?

164. Describe the third function.

165. What must the valve do in the fourth function?

166. What is the fifth function of the slide valve?

167. What is outside lap?

168. What is inside lap or exhaust lap?

169. What is inside clearance or exhaust lead?

170. What is the purpose of inside lap?

171. How much inside lap is usually given a locomotive slide valve?

172. What is the purpose of inside clearance?

173. What class of engines is it used on?

174. Do the valves of locomotives in ordinary service have or need inside clearance?

175. What is meant by cut-off, as applied to a slide valve?

176. What is compression?

177. When does compression begin?

178. What advantage is there in compression?

179. When does release occur?

180. What is steam lead?

181. What is meant by valve travel?

182. What is over travel?

183. What are the objects aimed at in giving a valve lead?

184. What would be the result if a valve had no lead?

185. Name another bad effect that would occur if a valve had no lead?

186. What is meant by clearance?

187. What is mechanical clearance?

188. What causes the lead on a locomotive valve to increase when the reverse lever is hooked back towards the center notch?

189. What does the term valve gear include, as applied to a locomotive?

190. What kind of a valve gear does a locomotive require?

191. Why are two eccentrics needed on each side of a locomotive?

192. What is the link saddle?

193. How is the link and the ends of the eccentric rods that are connected to it supported?

194. For what purpose is the link block?

195. What is an indirect valve gear?

196. What is a direct valve gear?

197. How is the slide valve usually connected to the valve stem?

198. What other method is sometimes used?

199. Why should a slide valve have a small amount of freedom in its connection?

200. What effect does it have upon the cut-off when the reverse lever is brought back towards the center notch?

201. What is the radius of the link?

202. Explain why it is that when the reverse lever is hooked back the lead increases.

203. How does this affect locomotives having long eccentric blades?

204. About how much lead is usually given an engine at full gear?

205. How should the valve be set when the radius of the link is 4 ft.?

206. What should the lead be with a 6-ft. radius?

207. How much lead should be given the valves when the radius is 8 ft.?

208. How is the travel of the valve affected by hooking the reverse lever back?

CHAPTER V

VALVE SETTING

As considerable time has been devoted to a study of the mechanism by which the valves of a locomotive are operated, it is now in order to take up the subject of valve setting, a subject which every young man who is ambitious to become a successful locomotive engineer should endeavor to thoroughly familiarize himself with. In fact, such knowledge is becoming more and more a necessity each year. This is indicated by the increasingly rigid examinations to which applicants for promotion from firemen to engineers are subjected.

The correct setting of the valves of a locomotive means that the adjustment of the positions of the eccentrics on the driving axle and the lengths of the eccentric blades, valve rods and valve stems is such that each valve will give the required distribution of steam to the piston that it is to serve. This has already been explained under the heading, Function of the Slide Valve. As the great majority of locomotives are equipped with indirect link valve gear, attention will now be directed to the setting of valves operated with this type of valve gear. One of the first things to be done is to see that the driving wedges are properly adjusted, also that the main rod keys at both ends are correctly tightened. It is also well to see that the eccentric rods are connected in the right way, which means the go-ahead eccentric rod to the top end of the link and the back-up eccentric rod to the bottom end of the link.

Don't forget that with the indirect link motion the eccentric that controls the valve always follows the crank pin. That is, when the pin is on the forward center, for instance, the body of the go-ahead eccentric will be above the axle and that of the backing eccentric will be below, and both eccentrics will be advanced towards the pin sufficient to overcome the lead and lap of the valve. This is termed angular advance of the eccentric. The eccentrics should be placed as near as possible in these positions and the set screws slightly tightened. Of course the positions of the eccentrics can only be guessed at on the start. Their correct positions on the driving shaft can only be arrived at after the dead centers have been located. The reverse lever should also be tested to see that the latch will enter each extreme notch.

The next most important proceeding is to get the port marks properly located on the valve rod. This, of course, must be done while the steam chest cover is off. The valve stem key should be examined to see that it is securely tightened. Next examine the back end of the valve rod and see that it will connect with the rocker arm without cramping or twisting the valve stem, which would be liable to throw the ends of the yoke up or down, thus cramping the valve. As the steam chest cover is off, the chest itself should be firmly clamped to the cylinder by screwing some of the nuts down upon washers or bushings, being careful not to mar the copper joint on top of the chest. The valve stem gland should be in place and the valve rod connected up in order to keep the stem at its proper height, as any variation in the height of the stem will cause an error in the use of the tram. If there is any lost motion between the valve and the valve yoke (and

there should be a little), it should, while getting the port marks, be taken up by the use of liners between the back of the valve and the yoke, as shown at A in Fig. 62. Next move the valve back just far enough to permit a piece of thin tin to be inserted between the edge of the forward port and the forward edge of the valve at point V. The valve is now in the correct position for the forward port mark to be placed upon the valve rod; so with a prick punch make a small center at C on the cylinder, and from this point with the valve tram, as shown in the cut (Fig. 62), scribe the line F on the valve rod. Next remove the liners and place them at the front of the valve at A, Fig. 63, and

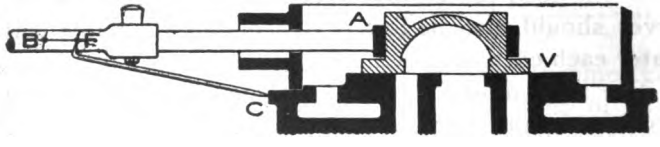

FIGURE 62

move the valve ahead far enough to allow of the insertion of the piece of tin between the edge of the back port and the back edge of the valve, as shown at V, Fig. 63. Now take the tram and from point C scribe the line B on the valve rod. Next, using a box square, scribe a parallel line on the valve rod, and at the two points where lines F and B intersect the parallel lines, make two small centers. Center F is the forward port mark and center B is the back port mark.

The mid-travel or central position of the valve on its seat should also be marked, which is done in the following manner: With a pair of dividers find the exact center between points F and B and at this point make another small center M, Fig. 63. This point will rep-

resent the central position of the valve. The points F and B indicate the points of admission and cut-off, and the distance from F to M or from B to M equals the lap of the valve. If the valve has neither inside lap nor inside clearance the point M will represent the points of both release and compression. If the valve has inside lap or inside clearance it will be necessary to locate two additional points on the valve rod. These points may be found in the following manner: Set a small pair of dividers to a distance equal to the inside lap or inside clearance, whichever the valve has, and from the center M describe a small circle, and the two points where the parallel line on the valve rod bisects this circle will indicate the points of release if

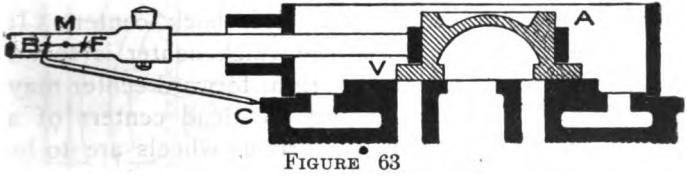

FIGURE 63

it is inside clearance or of compression if it is inside lap. These two points are very seldom used in practice, but if, owing to the construction of the valve, it should become necessary to use them it should always be remembered what they represent, whether inside lap or inside clearance.

The next important move in valve setting is to find the four dead centers. It is very important that the dead centers be accurately located. Although the crosshead moves very little while the crankpin is near the dead center, yet the valve is moving at nearly its greatest speed, being at about half travel, and a very slight error in locating the dead centers will seriously affect the accuracy of the whole work.

The term dead center is commonly taken to mean that the driving wheels are in such a position that the centers of the driving axles and the centers of the crankpins are in a horizontal line, but this is not always the dead center. Theoretically the term implies that the center of the crosshead pin, the center of the crank pin, and the center of the driving axle be exactly in line, regardless of whether that line be horizontal or inclined. Therefore the crankpin must pass two dead centers in each revolution, viz., the forward dead center and the back dead center. Consequently there are in locomotive valve setting four dead centers to be located and marked: first, the right forward dead center; second, the right back center; third, the left forward center, and fourth, the left back center. It makes no particular difference which center is found first, but for convenience the right forward center may be taken. Of course finding the dead centers of a locomotive implies that the driving wheels are to be revolved more or less. This means that the engine must be pinched ahead or back as required, which involves considerable labor on the part of helpers, as many an engineer who has served an apprenticeship in the shop can testify. Many well conducted shops are equipped with roller devices of various designs which are placed under the drivers to be revolved. Such a machine is illustrated in Fig. 64. It may be operated by one man by means of the lever shown. In some up-to-date shops the rollers for moving the drivers are operated by small air engines.

And now to find the right forward dead center. Turn the driving wheels forward until the crosshead is within an inch of the forward end of the stroke, as indicated in Fig. 65. Then, having first examined the

wheel cover to see that it is securely fastened, make a center at any convenient point on it, as at C; also make a center at point F on the forward guide block. Now, using a short tram called a cross head tram, describe from point F an arc G on the cross head; also

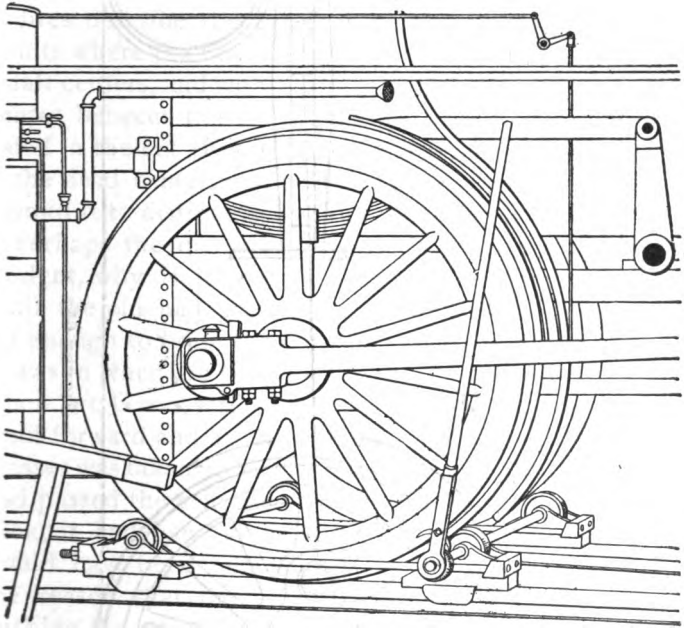

FIGURE 64

with one point of a longer tram, called a wheel tram, set in center C describe the arc A on the tire of the wheel. Next turn the wheel ahead as indicated by the arrow until the cross head has passed the limit of its forward travel and has receded on its return stroke far enough to bring the arc G a short distance back of

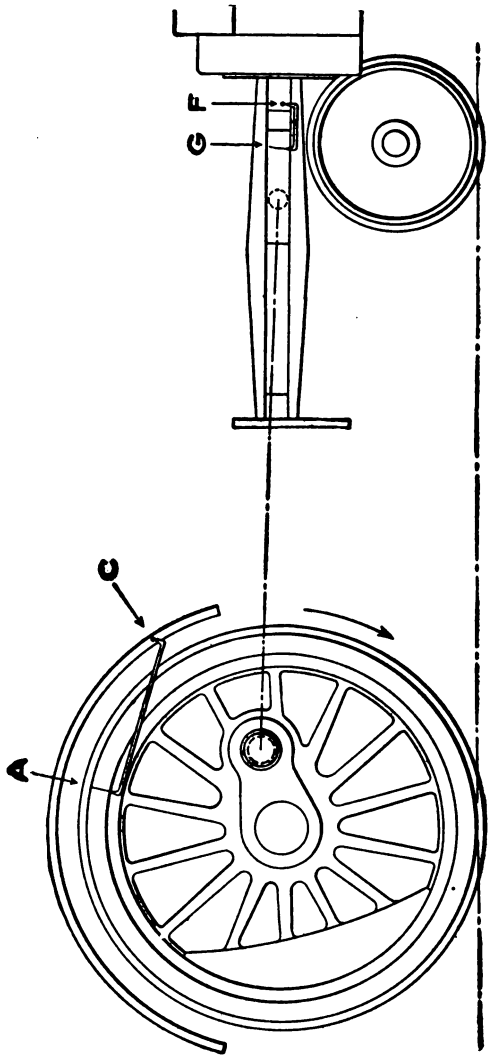

FIGURE 65

the point of the tram, one point of which is set in center F. Now reverse the motion and pinch the wheels slowly backward until the arc G comes directly under the point of the tram. Then stop, and with the wheel tram set in center C scribe an arc B on the tire, as indicated in Fig. 66. Now with a pair of hermaphrodites describe the arc D E on the tire, and at the points where the lines A and B intersect arc D E make small centers, and with a pair of dividers find the exact center between these two points. This center is indicated in the cut (Fig. 66) by the letter H. This point is the dead center, and a small circle should be drawn around it to distinguish it from the other centers.

Perhaps the query might arise in the mind of the student, why is it that in turning the wheels ahead until the pin had passed the center they were turned far enough to bring the cross head back of the position it was in when arc G was scribed? The answer is, that when arc G was scribed the pin was pushing the cross head forward and all the lost motion between pins and brasses was taken up in that direction. If, after the pin had passed the center and the crosshead was traveling back, it had been stopped at arc G, the lost motion would have been taken up in the other direction, for the reason that the pin was now pulling instead of pushing the crosshead. The result of this would have been an error in the location of the arc B and also of the point H. But by pulling the crosshead back past arc G and then reversing the motion and allowing the pin to push the crosshead until the dead point H was located, the lost motion was taken up in the same direction as when arc G was first drawn.

Having now found the dead center at point H, the next move is to throw the reverse lever into the

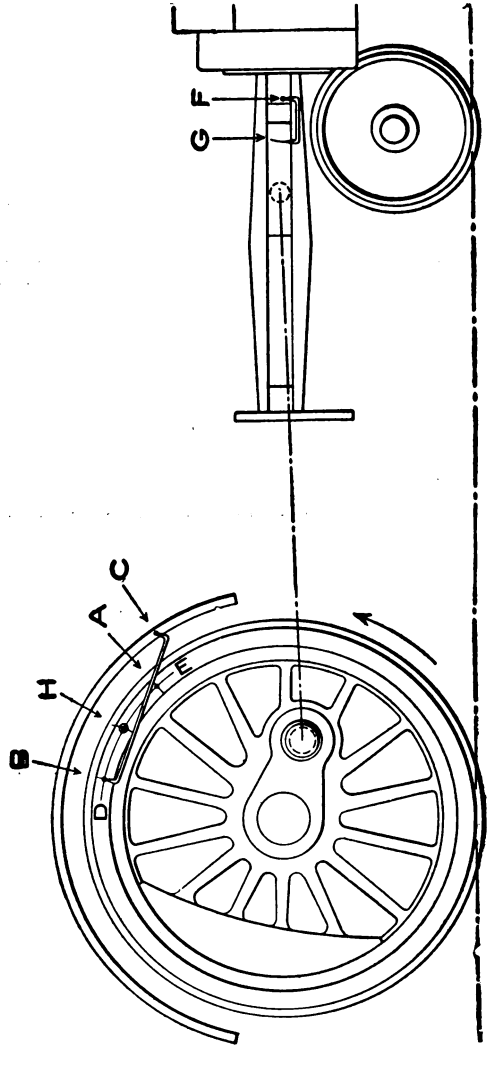

FIGURE 66

extreme back notch, so as to take up all the lost motion in the valve gear while backing up. Now start to pinch the engine back, and with one point of the wheel tram in center C, watch the center H and when it comes exactly under the other point of the tram, stop. The engine is now on the right forward dead center, and a vertical line should be scribed on the guides exactly in line with the front end of the crosshead. This line indicates the extreme forward travel of the crosshead, and it is important that it should be placed there.

While the engine is in the position it now is, that is, on the right forward dead center, and the valve gear in the backward motion with all the lost motion taken up in that direction, take the valve tram and from point C, Fig. 62, scribe an arc on the valve rod, starting slightly above the parallel line and extending considerably below it. The distance of this arc, measured on the parallel line from center F, indicates the position of the valve, as regards lap or lead for backward motion. The reason this arc is drawn below the line is that the back-up eccentric is moving the valve, and by having the arc below the parallel line it is easily distinguished from the other arc soon to be scribed for the forward motion. Now pinch the wheels back until the crankpin is about 6 in. above the dead center. Then put the reverse lever in full forward motion and pinch ahead until the pin is again on the forward dead center, and with the valve tram again set in point C scribe another arc on the valve rod, this time extending above the parallel line. The distance this arc is ahead or back of the point F indicates the amount of lap or lead the valve has in the forward motion, when the crankpin is at right forward dead center.

Before making any adjustments, go round to the left side of the engine and find the left forward dead center; also mark the left valve rod for both forward and back motion in the same manner as the right valve rod was marked. Having completed the location of the forward dead centers for both sides, the next move is to start on the right-hand side again, and pinch the engine towards the right back dead center, which is to

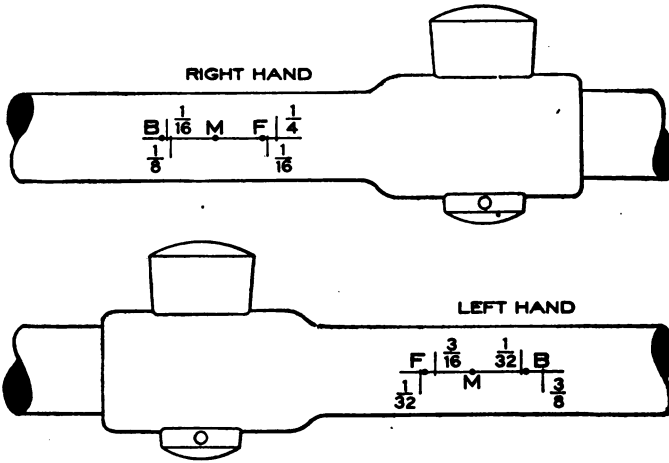

FIGURE 67

be found in the same manner as the forward one was. Next find the left back dead center, marking the valve stems and crossheads in both instances exactly as before.

The valve rods will now show a marking similar to that illustrated by Fig. 67, with the exception that the figures may not coincide, as the figures shown in Fig 67 are merely assumed for purposes of explanation. As before stated, the arcs which have been scribed

across the parallel lines indicate by their position relative to the port marks F and B whether the valve has lap or lead at either dead center. If an arc comes between the port marks it indicates lap, if outside it indicates lead. Referring to Fig. 67, the two forward motion arcs on the right side valve rod, which are distinguished from the back motion marks by being above the parallel line, show that the valve has ¼-in. lead at the forward port mark and $\frac{1}{16}$-in. lap at the back port mark.

When the valve tram reaches from center C to either center B or center F, it indicates that the valve is at the point of cut-off, and since the valve is to travel equal distances each way from these points, it follows that by measuring the distance from B or F to the arcs, it may be determined how much and whether to lengthen or shorten the eccentric blades. First take the right forward motion. The distance from F to the mark above the line is ¼ in., and from B to the mark for back motion is $\frac{1}{16}$ in., therefore the length of the right forward motion eccentric blade must be changed so as to equalize these distances, and the point to be determined is, shall it be lengthened or shortened? This can be done in the following manner: Take a small pair of dividers and find the exact center between the two tram marks above the parallel line. If this center is ahead of center C the eccentric blade must be shortened, if back of it the blade must be lengthened. If the engine has a direct valve motion, this rule is to be reversed and the adjustments made accordingly.

The next point to be determined is, how much shall the blade be lengthened or shortened? A good rule to follow in this instance is this: When the arcs on

the valve rod are both back of both ahead of the port marks F and B, the length of the eccentric blade should be altered an amount equal to one-half the sum of the distances between the port marks and the arcs, or if one arc is back and the other is ahead of their respective port marks, the length of the blade should be changed an amount equal to one half the difference of the distances between the port marks and the arcs. In this particular case the valve has traveled too far back, as shown by the ¼-in. lead on the forward port mark and the $\frac{1}{16}$-in. lap on the back port mark. Therefore the blade must be shortened one-half the sum of these distances, or $\frac{\frac{1}{4}+\frac{1}{16}}{2}=\frac{5}{32}$ in. This will square the valve for right forward motion, or in other words equalize its travel in either direction from mid position, as may be proved by the following simple calculation. The valve had ¼-in. lead at the forward port mark, the eccentric blade is shortened $\frac{5}{32}$ in., thus bringing the point of the tram that much nearer to F. Then $\frac{1}{4}-\frac{5}{32}=\frac{3}{32}$ in., which is now the lead at the forward end. At the back end, instead of lead, the valve had $\frac{1}{16}$ in. lap.

After the blade is shortened $\frac{5}{32}$ in. it will be found that the valve has been moved that distance ahead from its former position. Then by deducting the $\frac{1}{16}$ in. lap from $\frac{5}{32}$ in. change it will be found that the valve has $\frac{3}{32}$ in. lead at the back end also. It may be assumed that the valves are to have $\frac{1}{32}$ in. lead when in full gear, and as the valve under consideration now has $\frac{3}{32}$ in. at both ends, it will be necessary to reduce it by turning the eccentric back upon the shaft. However, no changes should be made until all the tram marks on both sides of the engine have been examined and a

memorandum made of the changes required, as, for instance, R. F. Ecc., shorten blade $\frac{5}{32}$ in., $\frac{1}{16}$ in. lead off.

The tram marks for the right backward motion should be examined next. These marks are below the parallel line, and measurements show that the valve has $\frac{1}{16}$ in. lead at the forward end and $\frac{1}{8}$ in. lap at the back; therefore the blade of the right back up eccentric must be shortened thus, $\frac{\frac{1}{8}+\frac{1}{16}}{2}=\frac{3}{32}$ in. This will square the valve for right backward motion, but it will still have $\frac{1}{32}$-in. lap at both ends, when $\frac{1}{32}$-in. lead is required; therefore the eccentric must be turned ahead. These changes should be noted down as follows: R. B. Ecc., shorten blade $\frac{3}{32}$ in., $\frac{1}{16}$-in. lead on.

If the upper and lower rocker arms are of the same length the figures for changing the length of the eccentric blades will be all right, but if, as is often the case, the lower arm is shorter than the upper one, the length of the blades will not need to be changed quite as much as is indicated by the marks on the valve rod. But it will be assumed in this instance that the arms are of equal length, and the lengths of the eccentric blades for the right-hand side may be adjusted according to the above figures.

Next go to the left-hand side. By reference to Fig. 67 it will be seen that the valve has $\frac{3}{16}$-in. lap on the left forward motion in front and $\frac{1}{32}$-in. lap behind. In this instance the valve has not traveled far enough back, therefore the blade must be lengthened one-half the difference between these distances or $\frac{\frac{3}{16}-\frac{1}{32}}{2}=$ $\frac{5}{64}$ in. This will equalize the lap at both ends, making

it now $\frac{7}{64}$ in., and in order to obtain the $\frac{1}{32}$-in. lead desired it will be necessary to move the eccentric ahead on the shaft an amount sufficient to overcome the $\frac{7}{64}$-in. lap plus $\frac{1}{32}$-in. lead, a total of $\frac{9}{64}$ in. This is to be noted down as follows: L. F. Ecc., lengthen blade $\frac{9}{64}$ in., $\frac{9}{64}$-in. lead on.

Examination of the two left back motion marks shows that the valve has $\frac{3}{8}$-in. lead at the back and

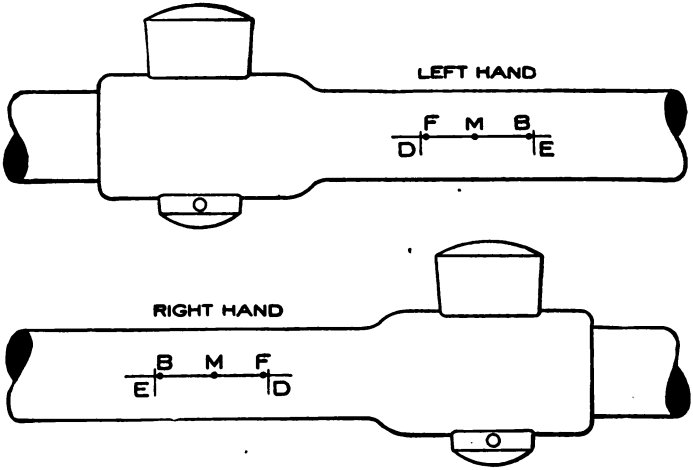

FIGURE 68

$\frac{1}{4}$-in. lead in front. Therefore the back up eccentric blade should be lengthened $\frac{\frac{3}{8}+\frac{1}{32}}{2}=\frac{13}{64}$ in. This will give the valve $\frac{13}{64}$-in. lead at both ends, but as $\frac{1}{32}$-in. lead is all that is required, it will be necessary to turn the eccentric back on the shaft far enough to overcome $\frac{11}{64}$ in. of this surplus lead. Note this down also as follows: L. B. Ecc., lengthen blade $\frac{13}{64}$ in., $\frac{11}{64}$ in. lead off.

The lengths of all the eccentric blades should now be adjusted according to the figures obtained, after which it will be in order to set the eccentrics. It is generally best to set the forward motion eccentric first, because it is easier to get at than the back motion one is; then if the backward motion eccentric needs to be changed enough to affect the lead in forward motion, the forward motion eccentric can easily be reset, and it will need to be moved so little that the backward motion will not be affected enough to require any further attention.

As before stated, it is desired to give the valve $\frac{1}{32}$-in. lead in full gear in both forward and backward motion, and before setting the eccentrics it will be necessary to have lead marks on the valve rods for a guide. To get these marks, set a pair of dividers to the distance between the centers B and F, Fig. 68, plus the lead, in this instance $1\frac{1}{2}$ in. $+ \frac{1}{32} = 1\frac{17}{32}$ in. Then with one point of the dividers in center F scribe an arc E across the parallel line, back of center B, also from center B scribe an arc D in front of F. These points, E and D, will serve as guides in setting the eccentrics for lead. The next move is to place the engine on the dead center; either one will do, but for convenience it may be assumed that it is the right forward dead center. When adjusting the lengths of the eccentric blades it was found that with the engine and reverse lever in this position the valve had $\frac{3}{32}$-in. lead. This must be reduced to $\frac{1}{32}$ in., and it might be done by simply turning the right forward motion eccentric back upon the driving shaft, but that would take up the lost motion in the opposite direction to what it is when the engine is running ahead, and this would cause an error in the working of the valve. The

proper method is to turn the eccentric backward far enough to take off all the lead, and then turn it slowly ahead until the valve tram will reach from center C, Fig. 62, to the lead mark D, Fig. 68. Next throw the lever into full back gear and proceed to set the right backward motion eccentric.

After getting the right backward motion eccentric blade adjusted to the correct length it was found that the valve had $\frac{1}{32}$-in. lap at both ends; therefore this eccentric should be slowly turned ahead on the shaft until the tram will reach from center C to lead mark E, Fig. 68. This will square the right-hand valve and give it the desired lead, and the next move is to go around to the left side, throw the reverse lever into full gear ahead again and pinch the engine onto left forward center.

After adjusting the left forward eccentric blade to the correct length it was found that the valve had $\frac{7}{64}$-in. lap. The eccentric must therefore be turned ahead until the tram will reach from center C on the left cylinder to lead mark D on the left valve rod. Next proceed to set the left backward motion eccentric, and in doing this the wheels should be pinched ahead about 6 in., then place the reverse lever in full back gear and pinch the engine back onto the center. This is done to take up all the lost motion in the direction in which the engine is to run—a very important matter that should never be lost sight of in working from the dead center for either forward or backward motion. After getting the left backward motion eccentric blade the right length the valve had $\frac{13}{64}$-in. lead at both ends of the stroke. The eccentric should therefore be turned back sufficiently far to take off all the lead. Then with all the lost motion taken up, turn

the eccentric slowly ahead until the tram point will drop into lead mark E, Fig. 68.

The engine is now square, and the valves have the correct amount of lead all around. The eccentrics should be securely fastened in their proper location either by set screws or keys, and it will be next in order to ascertain the points of cut-off, so that they may be equalized as near as possible, for be it remembered that no matter how accurate the valves may have been set, as regards lead, travel, etc., they very seldom cut off the steam at the same distance from the commencement of the stroke at each end of the cylinder, and one cylinder may be getting more steam than the other. This is due to the fact that the link motion is not a perfect valve gear, various errors being introduced by the angularity of the main rod, and eccentric rods, and the off-set of the link pin holes from the link arc, but these errors can be almost entirely eliminated by making certain changes, among which may be mentioned the off-setting of the link saddle stud, although with case-hardened links and the saddle rigidly bolted to the link this method is not always practicable.

Another very common method is to equalize the forward motion by changing the length of the backward motion eccentric blades, thus sacrificing equality of lead and cut-off in the back gear, but as a locomotive does the greater portion of its work in the forward gear, except it be a switch engine, this plan is permissible.

Another method employed to some extent is to sacrifice equality of lead in both forward and back gear for equality of cut-off. But before either plan can be adopted it will first be necessary to find the points of

cut-off as the valves are now set. As a locomotive engine performs the principal part of its work with the reverse lever hooked back towards the center notch and the valves cutting off at early points in the stroke, it is more important that the steam should be equally distributed with the lever in the working notch than with it down in the corner.

Passenger engines usually cut-off at from 4 to 6 in., and freight engines at from 6 to 9 in. As in setting the eccentrics, a start at finding the points of cut-off may be made with the engine on either dead center, but for convenience it may be assumed in this instance that the engine has been placed on the right forward dead center. First try the cut-off in backward motion. Pinch the wheels backward until the crosshead has traveled about 6 in. from the extreme travel mark on the front end of the guides. Then stop the motion, and with the point of the valve tram in center C, Fig. 62, move the reverse lever back of the center until the tram will drop into the forward port mark F. Put the lever one notch farther back, then pinch the wheels backward until the tram again drops into the forward port mark F, thus indicating that the point of cut-off has been reached. Now measure the distance from the front travel mark to the front end of the crosshead. Suppose it is found to be 7½ in. Chalk this down on the front end of the outside guide. Use the outside guide for the backward motion, because the backward motion eccentric is on the outside. Now pinch the wheels farther back until the steam is cut off on left side back end of cylinder, which can be ascertained by the use of the tram in the same manner as on the right side. It may be assumed that cut-off takes place when the piston has traveled 8¾ in. from

beginning of stroke. Now turn the wheels still farther back, until the right pin passes the front center and reaches the point where cut-off takes place, which will be assumed to be 8 in. from commencement of stroke. These figures should all be marked down with chalk on the outside guides for the backward motion as they are found, and the reverse lever must be left in the same notch until all four points of cut-off for backward motion are located. Next pinch the engine still farther back until the left pin passes the front center and cut-off for this end is reached, which may be taken at 9 in. for the present.

These investigations show that cut-off for the right cylinder occurs at 7½ in. of the backward and 8 in. of the forward stroke, and that for the left cylinder cut-off takes place at 9 in. of the backward and 8¾ in. of the forward stroke. These figures indicate that the right-hand valve is traveling a little too far ahead and the left valve a short distance too far back, and the cut-off for each side may be equalized by slightly changing the lengths of the backward motion eccentric blades; that of the right-hand one must be lengthened and the left one will need to be shortened, and how much to change them may be found as follows:

Taking the left side first, cut-off occurs on the front end of cylinder at 9 in. and on the back end at 8¾ in., and the average is $\frac{8\frac{3}{4}+9}{2}=8\frac{7}{8}$ in., which is the distance from each end of the stroke at which cut-off will occur when it is equalized. Now pinch the wheels forward enough to bring the crosshead 8⅞ in. from the end of the stroke and enough more to take up all the lost motion when turning back. Next pinch the engine backward until the crosshead is again 8⅞ in.

from the beginning of the stroke at the front end, and with the valve tram in center C, Fig. 62, scribe a mark on the valve rod. This mark will be a short distance ahead of center F, and this distance shows how much too far back the valve is traveling, and the eccentric blade must be shortened enough to throw the valve ahead that much. This will equalize the cut-off for the left side in the backward motion, and the right side should be treated in the same manner, except that in this case the backward motion eccentric blade must be lengthened, because the valve was traveling too far ahead, the cut-off for the forward stroke being 8 in. and for the backward stroke 7½ in., and the average is $\frac{8+7\frac{1}{2}}{2}=7\frac{3}{4}$ in., which will be the point of cut-off for the right side in backward motion when the proper change is made.

This will leave considerable difference between the two sides, the cut-off on the left side occurring at 8⅞ in. and on the right side at 7¾ in., but this will be remedied later on, and the next move will be to equalize the cut-off for the forward motion by commencing with the backward stroke on the right-hand side. Pinch the engine ahead until the pin passes the forward center and draws the crosshead back 6½ in. from the beginning of the stroke. Move the reverse lever ahead to the corner, then move it slowly backward until the valve closes the port, as will be indicated by the valve tram when it reaches from center C to center F, Fig. 62; then put the lever in the first notch ahead of that position and leave it there until the points of cut-off have all been found for the four strokes. Now pinch the engine ahead until the tram again shows that the point of cut-off is reached. This may be assumed to

be 8 in. back of beginning of the stroke. Mark this down on the front end of right inside guide, then turn the wheels ahead and get the cut-off for the front end of left-hand cylinder, which will be, say 7 in. Again pinching ahead, find the cut-off for the back end of the right-hand side to be 8¾ in., and still turning ahead, find cut-off for back end of left side to take place at 8 in.

For convenience, the cut-off for the left side may be equalized first. It was found that cut-off occurred at 7 in. for the backward stroke and at 8 in. for the forward stroke, the average being $\frac{7+8}{2} = 7\frac{1}{2}$ in., and in order to equalize the travel of the valve, which now travels too far ahead, it will be necessary to lengthen the eccentric blade. Pinch the wheels back far enough to bring the crosshead within less than 7½ in. of the end of the stroke, so that when turned ahead again all lost motion may be overcome. Now pinch ahead again until the crosshead is exactly 7½ in. from the beginning of the stroke, and with the valve stem tram in center C scribe a mark on the valve rod, and the distance of this mark from center B is the amount that the eccentric blade must be lengthened. This will equalize the cut-off for forward motion on the left side, and the right side next demands attention. Here the point of cut-off for the backward stroke was 8 in., and for forward stroke 8¾ in., the average being $\frac{8+8\frac{3}{4}}{2} = 8\frac{3}{8}$ in., which is the point at which cut-off for forward motion on the right side must be equalized for the present.

The right forward motion eccentric blade will also need to be lengthened, as the valve travels too far

ahead, and the correct amount to lengthen the blade may be found in the same manner as with the left side. This will leave the points of cut-off for forward motion as follows: for right-hand side, 8⅜ in.; left side, 7½ in. In backward motion, as equalized, cut-off for right side is 7¾ in., left side 8⅛ in. It will thus be seen that in forward gear cut-off is earliest on left side and in back gear it occurs latest on that side. In order to overcome this unequal condition one of two things may be done, either lengthen the link hanger on the left side or shorten hanger on the right side. The former method will be adopted, but before making any alterations it will be necessary to ascertain the amount to lengthen, and this may be done in the following manner:

Put the reverse lever in the same notch that it was in when the cut-off in forward gear was found, and measure the distance from any stationary point directly above or below the upper link hanger pin on the left side to the center of that pin. Now pinch the engine ahead far enough to bring the left crosshead the same distance from the beginning of the stroke as the right crosshead was when cut-off took place, which distance is 8⅜ in. This is where cut-off must occur on the left side also. Now move the reverse lever ahead about four notches, and then with the point of the valve tram in center C move the lever slowly back until cut-off occurs as indicated by the tram. Now measure the distance again, from the same stationary point to the center of the upper hanger pin. The difference between this distance and the distance between these two points as first found is the amount the left hanger must be lengthened to equalize the cut-off on both sides, or raising the tumbling shaft box slightly more

than this on the right-hand side would bring about the same result as shortening the link hanger on that side. This change will slightly affect the operation of the valves in back gear, for this reason: The nearer the link block is to the center of the link, the shorter will be the cut-off, and the change made, viz., lengthening the hanger, while it throws the block farther below the center of the link in forward gear, thus delaying the cut-off, at the same time brings the link block nearer the center of the link in back gear, thus accelerating the cut-off, and this is the result wished for to cause the two sides to cut off nearer equal in back gear, as it will be remembered that cut-off on the left side occurred at 8⅞ in. in the back gear and 7¾ in. on the right side in back gear. The amount that the hanger has been lengthened may not exactly equalize the cut-off in back gear, but it will bring it near enough for all practical purposes, for the reason that the engine does very little work in back gear. Owing to the space occupied by the piston rod in the back end of the cylinder, the cut-off should occur ¼ or ⅜ in. later in the back end than in the front end of the cylinder if it is desired that the same volume of steam be admitted to each end of the cylinder.

The next points to be determined relate exclusively to the exhaust opening and closure with reference to release and compression. These events, as has been already explained, are controlled by inside clearance and inside lap. If a valve is line and line inside, having neither inside clearance nor inside lap, the point M, Fig. 63, will indicate both the opening and closure of the exhaust, but if a valve has inside clearance, release will occur before the valve has reached its central position; or if the valve has inside lap,

closure of the exhaust passage will occur before the valve has reached its central position.

Now in order to ascertain at what point in the stroke either one of the above named events takes place, use a pair of small dividers and from center M describe on each valve rod a small circle, the radius of which equals the inside lap or inside clearance, as the case may be, and make two small centers where the circle crosses the horizontal line, also mark each with some distinguishing mark to show whether it represents inside lap or inside clearance.

Having gotten these marks properly located, proceed to test each event by the same method as with the cut-off, marking down the point in each stroke at which the event, be it release or compression, begins, after which compare the figures, and the changes required may be made in the same way as with the cut-off. Equalizing the cut-off incidentally affects exhaust closure, and as compression is of more importance than release, it should be made as near perfect as possible. There is, however, but one method by which the various events in the working of a valve may be made thoroughly clear, and that is by the use of the indicator.

The maximum port opening and maximum travel of the valve may be found thus: Place the reverse lever in full gear; that is, "down in the corner." Then pinch the wheels one complete revolution, and with the valve tram in center C, mark the extreme travel of the valve in each direction. The distance between the extreme points indicates the maximum travel of the valve, and the distance from either extreme point to the port mark indicates maximum port opening.

The minimum travel and minimum port opening

may be found by placing the reverse lever in the center notch of the quadrant, and then repeating the operation of turning the wheels one revolution, while at the same time the distances are noted with the tram in the same manner as before.

Questions

209. What does the correct setting of the valves of a locomotive mean?

210. What two very important details should be looked after first when preparing to set valves?

211. What should be done regarding the eccentric rods?

212. With indirect valve gear, what is the position of the eccentric that controls the valve?

213. What is meant by angular advance of the eccentrics?

214. What should be done with the reverse lever before commencing to set valves?

215. What is the next most important proceeding in valve setting?

216. How should the valve rod connect with the rocker arm?

217. If the valve rod should be cramped or twisted, how would this affect the valve?

218. What should be done with the steam chest and valve stem gland?

219. What should be done with the lost motion between the valve and valve yoke while getting the port marks?

220. Where should the port marks be placed for convenience?

221. Where will the point indicating mid travel or central position be?

222. How is the lap indicated by the marks that are now on the valve stem?

223. If the valve has neither inside lap nor inside clearance, what point indicates release and compression?

224. If the valve has inside lap or inside clearance, how may they be measured and properly marked on the valve stem?

225. What is the next important move in valve setting after getting the port marks?

226. What is the meaning of the term dead center as applied to an engine?

227. How many dead centers must the crankpin pass in each revolution?

228. How many dead centers are to be located and marked in setting the valves of a locomotive?

229. Describe in general terms the method of locating and marking a dead center.

230. How should the guides be marked while the engine is on dead center?

231. How are the marks for lap or lead located on the valve rod?

232. What should be done before making any adjustments?

233. When marks for lap or lead are located on the valve stem, how are they distinguished from each other?

234. How are the eccentric rods adjusted as to length?

235. Give the rule for finding out how much the eccentric blade must be lengthened or shortened in order to get the correct travel for the valve.

236. Suppose the valve has ¼-in. lead on the forward port and $\frac{1}{16}$-in. lap on the back port, how much must the blade be shortened?

237. If a valve has $\frac{1}{16}$-in. lead at the forward port and $\frac{1}{8}$-in. lap on the back port, what should be done with the eccentric rod?

238. After the lengths of all the eccentric blades have been adjusted so as to give the valve correct travel, what comes next?

239. Which eccentric should be set first?

240. Why?

241. What precaution should be taken when turning the eccentrics ahead to increase the lead?

242. After getting the eccentrics in their correct position and firmly secured, what is the next move in valve setting?

243. Mention some of the causes for variation in the cut-off.

244. How may this variation in the cut-off be equalized?

245. Mention another very common method of equalizing the cut-off.

246. Where should the reverse lever be placed while equalizing the cut-off?

247. At what point in the stroke do passenger engines usually cut off?

248. At what point in the stroke do freight engines usually cut off?

249. By what means may the point of cut-off be ascertained?

250. Suppose it is found that for the left-hand cylinder cut-off occurs at 9 in. of the backward and $8\frac{3}{4}$ in. of the forward stroke, at what distance from each end should it occur when equalized?

251. What must be done to bring about this equalization?

252. If, after equalizing the cut-off on both sides, it

is found that on the right-hand side it occurs at 8⅛ in. in forward gear and 7¾ in. in back gear, and that on the left side cut-off occurs at 7½ in. in forward and 8⅞ in. in back gear, what may be done to overcome the difficulty?

253. How may the amount to lengthen or shorten the link hanger be ascertained?

254. Why should cut-off occur a little later in the back end than in the front end of the cylinder?

255. What are the next points to be determined?

256. If a valve has inside lead or clearance, how will release be affected?

257. How may the points of release and compression be ascertained?

258. How does equalizing the cut-off affect exhaust closure?

259. Which is the more important, release or compression?

260. How may the maximum port opening and maximum travel of the valve be found?

261. How may the minimum port opening and minimum valve travel be found?

CHAPTER VI

PISTON VALVES AND BALANCED VALVES

Hitherto the plain D slide valve alone has been considered in the discussion of the subject of valves and valve setting.

There are, however, many other types of valves in use on locomotives, including piston valves, balanced slide valves, ported valves, roller balanced valves, etc.

Some of these possess many merits of their own, while others have very few points to recommend them.

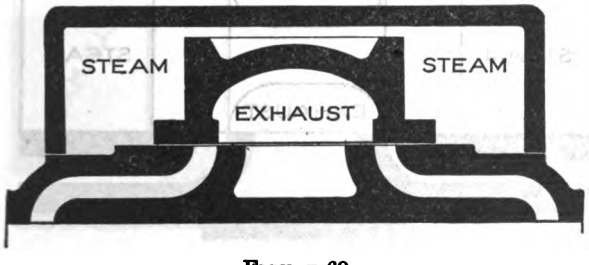

FIGURE 69

The principal objection to the use of the D slide valve is the large amount of friction caused by the action of the steam pressing the valve against its seat, and inventors have racked their brains for many years in efforts to produce a valve that would work without friction, and at the same time give a correct distribution of the steam to and from the cylinders.

The piston valve, while practically balanced, owing to the pressure of the steam acting upon each end, is, nevertheless, not a perfectly balanced valve unless the

valve rod extends through both ends of the valve chamber, and this necessitates an extra gland and set of rod packing. In order to more clearly illustrate this idea, reference is made to Figs. 69 and 70. Fig. 69 shows a plain D slide valve, and it will be noticed that the full pressure of steam in the valve chest acts upon the back of the valve. Of course there is a certain amount of back pressue from the steam port and exhaust port that tends to overcome the direct pressure; still there is an enormous strain on the valve gear that is required to move a valve under such conditions.

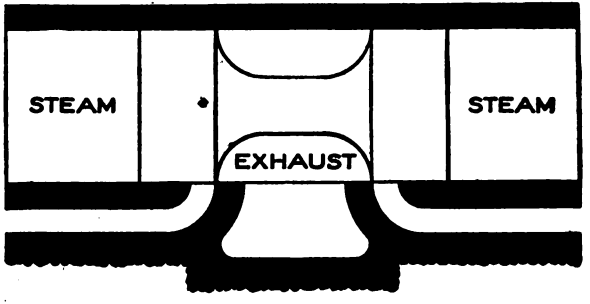

FIGURE 70

Fig. 70 shows a solid piston valve with outside admission, being thus identical in action with the D valve.

No valve rod is shown in either cut, but it will easily be seen that with the valve rod attached to but one end of the piston valve the area of that end will be decreased just so much, and the valve will be unbalanced by an amount equal to the sectional area of the valve rod, but this amount is so insignificant that builders very seldom add the extended valve rod, and so the piston valve may be considered as balanced, the only friction being that due to the

weight of the valve and the friction of the packing rings when the valve is fitted with them. In some types of piston valves the live steam is admitted inside, between the heads, as shown in Fig. 71, and the exhaust passes out around the ends, but the same principle of balancing is retained as with the outside admission type, for the reason that the pressure is applied between the ends of the valve instead of on the outside as with the other type. The sketches here given do not show the valves in their true proportions, being merely used to illustrate the principle

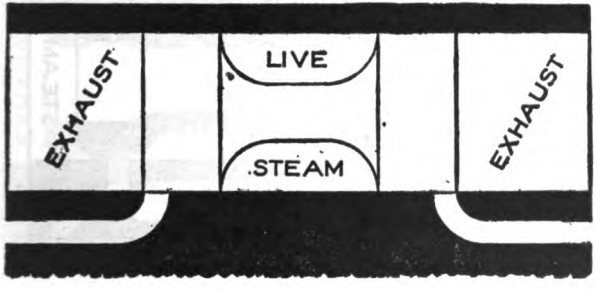

FIGURE 71

upon which the piston valve works. In practice the valve is made as long as possible, in order that the ports leading to the cylinder may be shortened to the minimum.

Another type of piston valve is shown in Fig. 72. This valve is made hollow for lightness and has packing rings at each end to prevent the steam from passing into the ports until at the proper moment. The edges of these packing rings control the admission of steam to the ports in the same manner as do the edges of the D valve, and when the valve is one of outside

admission it is set in the same manner as the D valve is. But if admission is from the inside, as shown in Fig. 73, the movement of the valve is reversed, as is the method of setting also. As it is very essential that the packing rings at each end of a piston valve be steam-tight, a certain element of friction is introduced in this manner. In the larger number of cases where piston valves are used, central or inside admission is the rule, a great advantage of this type over outside admission valves being that the larger portion of the cooling surface of the valve chamber is reserved for

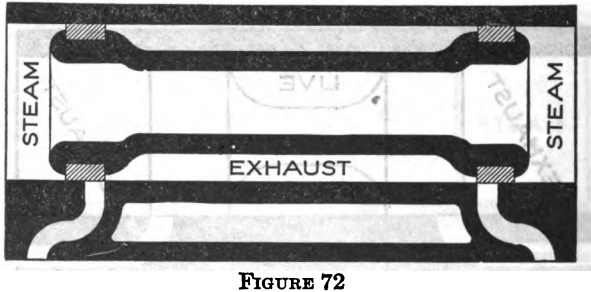

FIGURE 72

the exhaust steam. Another advantage is that of having only exhaust pressure against which to pack the valve rods, and make the joints for the heads of the valve chamber.

In taking charge of an engine having piston valves, an engineer should always first "look her over" and note the positions of the eccentrics with relation to the crank pin. He should also take a look at the rocker shaft if there is one. He will then be able to satisfy himself as to whether the valves have outside or inside admission, a very important thing to know in case anything should happen out on the road that necessitated resetting of one or both of the valves to

enable him to bring his engine home. As before stated, the movement of a piston valve having outside admission is precisely the same as that of a D slide valve, but it is well to note the fact that while the great majority of engines fitted with D slide valves have indirect valve gear, still there are some in which the motion is direct. For the guidance of the engineer in such cases, the following four simple rules are here given.

Rule 1. If the eccentrics and crank pin are together, that is, on the same side of the driving shaft, and there

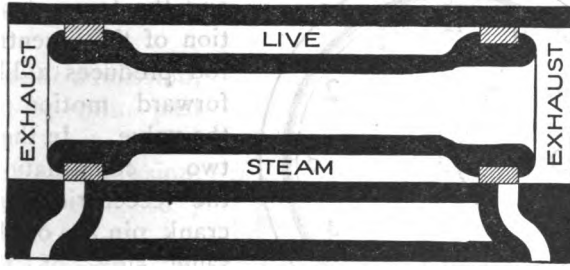

FIGURE 73

is a rocker arm that reverses the motion, the valve has outside admission, indirect.

Rule 2. If the eccentrics and crank pin are together and there is no rocker arm, but direct motion, the valve has inside admission, direct.

Rule 3. If the eccentrics and crank pin are on opposite sides of the driving shaft, and there is a rocker arm to reverse the motion, the valve has inside admission, indirect.

Rule 4. If the eccentrics and crank pin are on opposite sides of the shaft, and there is no rocker arm to reverse the motion, the valve has outside admission, direct.

There are, in fact, four possible combinations to deal with in the setting of locomotive piston valves, the first of which is the outside admission indirect connected valve, receiving its motion through the medium of the familiar rocker shaft, with one arm up and the other arm down. Second, inside admission direct, in which both arms of the rocker extend either up or down, and the forward motion of the eccentric rod produces a like forward motion of the valve. In these two combinations the eccentrics and crank pin are on the same side of the shaft. Suppose the crank pin to be on the dead center, then lines drawn from the center of the shaft through the heavy portions of the eccentrics would be approximately in the same position as would the hands of a watch indicating five minutes to seven o'clock, assuming the crank pins to be at 9 o'clock (see Fig. 74). Third, outside admission direct, in which the rocker arms do not reverse the motion of the eccentric blade; and, fourth, inside admission indirect, in which the motion is reversed by the rocker arms in the same manner as in combination one.

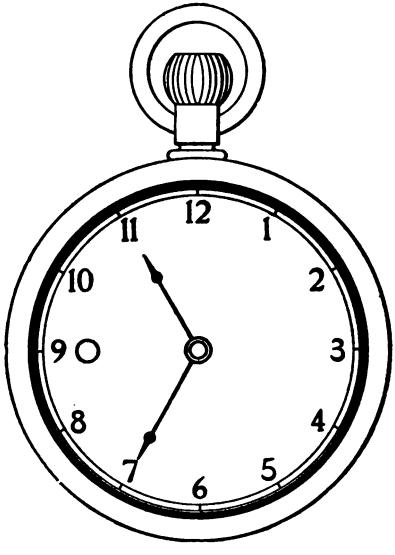

FIGURE 74

These two latter combinations may be termed the

p.m. setting, for the reason that lines drawn through the center of the shaft and the heavy portions of the eccentrics would occupy positions similar to the hands of a watch indicating five minutes past five, with the crank pin at nine o'clock (see Fig. 75), while the setting illustrated by Fig. 74 may be termed the a.m. setting, and as the careful engineer always has his watch with him, the following table may be of service:

Outside admission, indirect—5 min. to 7 a.m.

Outside admission, direct—5 min. past 5 p.m.

Inside admission, direct—5 min. to 7 a.m.

Inside admission, indirect—5 min. past 5 p.m.

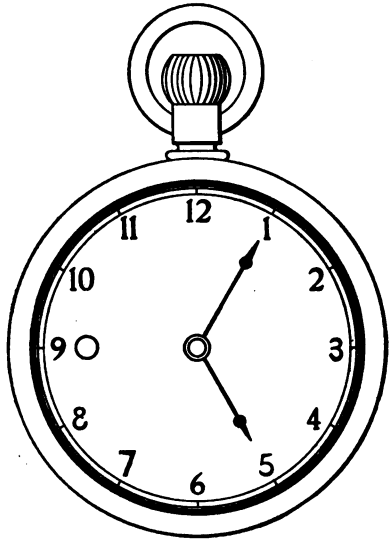

FIGURE 75

A good rule to remember in setting piston valves is this: If motion is imparted to the valve on the a. m. plan as described, and it is desired to increase the lead, the valve must be moved towards the crank pin, but if the p. m. plan governs the motion it will be necessary to move the valve away from the crank pin to increase the lead.

The American Balanced Valve Co., of Jersey Shore, Penn., are the makers of a new type of piston valve, which they term "The American Semi-plug Piston

Valve." This valve, a description of which is here given, has performed very efficient service since its introduction, and it appears destined to occupy a prominent position in locomotive work in the future.

Referring to Fig. 76, an internal admission valve is shown. The inner sides of the two snap rings, 1-1, are beveled. The outer sides of the snap rings are straight and fit against the straight walls of the valve spool. Against the beveled sides of the snap rings, solid, uncut, non-expansible wall rings, 2-2, fit. Their

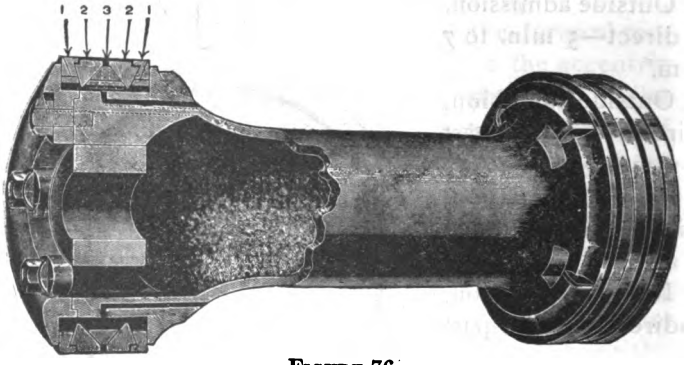

FIGURE 76

inner sides are beveled at a greater degree of angle than their outer sides, which fit the snap ring.

In between the two wall rings is placed a central double tapered snap ring, 3. This ring is properly lapped, and is put in under tension, thus holding the wall rings apart, putting a slight grip on the snap rings laterally. Thus applied, the action is as follows: When steam is admitted to the steam chest, or central portion of the valve, it passes through openings in the spool to the space beneath all of the rings, and acts upon the central wedge ring direct, giving it a

lead of the snap rings in action, and forcing the wall rings against the sides of the snap rings, so that prevention of their excessive expansion is positive. The snap rings are thus expanded against the casing just enough to make steam-tight contact, and the central ring grips them there, and they are prevented from further expansion. This is demonstrated by withdrawing the valve from the valve chamber while under steam until the first ring in the spool is entirely out of the cylinder, when no increase in the diameter of the snap ring can be observed. It can then be pushed back into the cylinder again. It will readily be understood how easy it is to prevent further expansion of the snap ring by the pressure underneath it, when the degree of angle of the bevel on the inside of the snap ring is considered. By making this degree greater, the power of the central wedge ring would be sufficient to decrease the diameter of the snap ring, closing it away from the valve chamber. Therefore it appears that this valve has all the advantages of the plug valve, without the drawbacks of the plug valve, and it has all the advantages of the snap ring valve, without the drawbacks of the snap ring valve, because it is practically a plug that does expand and take care of itself, not only for the difference in contraction and expansion, but also for wear; yet the plug is not so rigid as to knock a cylinder head out before relieving the water from the cylinder, and yet it is absolutely adjusted to the diameter of the casing at all times, and is held there and allowed to get no larger during its work under pressure. The rings are so lapped that they are steam-tight from all directions, and the bevel lap joint maintains unbroken steam and exhaust lines at the edge of the ring.

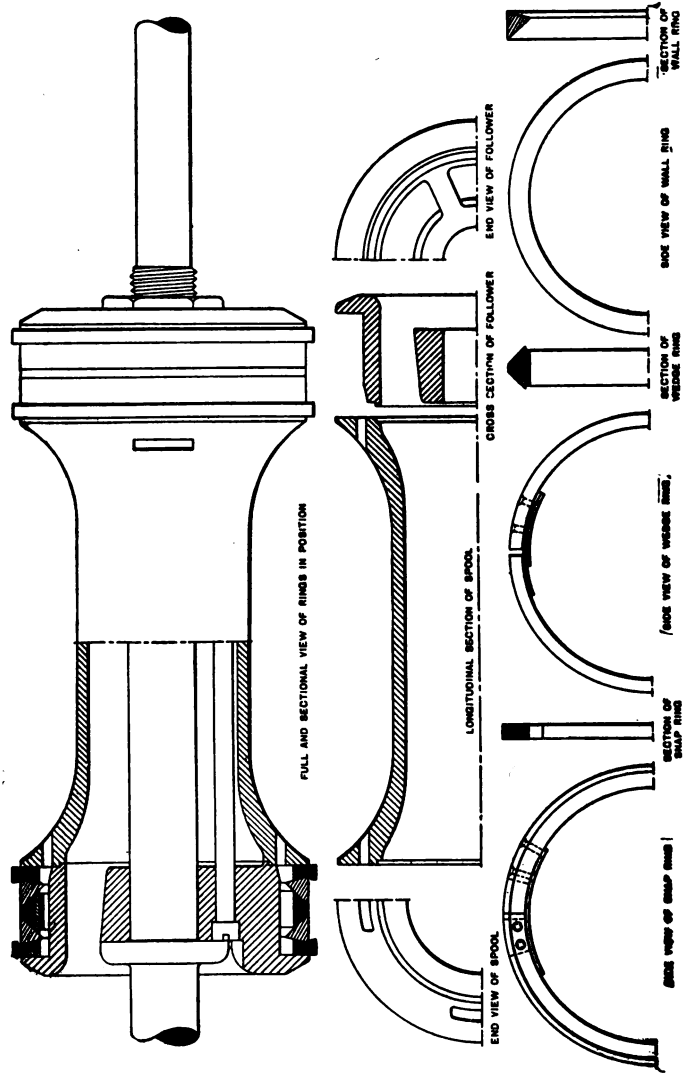
FULL AND SECTIONAL VIEW OF RINGS IN POSITION
END VIEW OF SPOOL
LONGITUDINAL SECTION OF SPOOL
CROSS SECTION OF FOLLOWER
END VIEW OF FOLLOWER
SIDE VIEW OF SNAP RING
SECTION OF SNAP RING
SIDE VIEW OF WEDGE RING
SECTION OF WEDGE RING
SIDE VIEW OF WALL RING
SECTION OF WALL RING

FIGURE 77 AMERICAN SEMI-PLUG PISTON VALVE

Fig. 77 further illustrates the construction of this valve, giving end and sectional views of the different parts. A common defect of snap ring piston valves is that the steam pressure gets under the rings, and expands them against the casing with the full force of the chest pressure, thus causing excessive friction, while at the same time the cage is worn unevenly by the valve working at short cut-off and over the ports. Under such conditions, steam-tight joints soon become leaky, and the leakage rapidly increases as the wearing goes on.

A piston valve, in order to give efficient steam-tight and durable service, should automaticaly regulate the frictional contact of the rings against the cage, and keep the cage perfectly true. It is claimed by the manufacturers of the American semi-plug piston valve that it meets these requirements, and the claim is substantiated by the record of an engine on the Buffalo and Susquehanna Railroad, which was fitted up with a set of these valves in June, 1901, and was in continual service up to April, 1904, or a little over two years and nine months, excepting when the engine was in the shop for necessary repairs, but during this time no repairs of any nature were required on the valves. No perceptible wear was detected, either of the casing or the rings, when the valves were removed for the purpose of exhibiting them at the St. Louis Exposition in 1904. It is also claimed that this valve does not require relief valves, by-pass valves, nor pop valves, and that it is handled the same as a slide valve, and drifts freely.

Many locomotives are equipped with piston valves of different types, but the internal admission valve appears to be the favorite. The form of piston valve

used by the Baldwin Locomotive Co. on their Vauclain engine will be fully described in the section on compound locomotives.

One of the advantages the piston valve possesses over other forms of slide valves is that it may be made long enough to bring the two faces or working edges near the ends of the cylinder, thus greatly reducing the clearance between the valve face and the piston.

The term balanced valve, as used in this connection with reference to locomotive practice, is meant to include all balanced valves except those of the piston type. As stated at the beginning of this chapter, there have been many different kinds of balanced valves applied experimentally to the locomotive, by inventors in their efforts to reduce the friction between the face of the valve and its seat. It is stated upon good authority that up to January, 1904, there had been 573 patents issued to those who had made attempts to perfect the slide valve, but in the great majority of these cases failure has been written up against them. A few of the more meritorious of these will be described and illustrated.

The Jack Wilson High Pressure Valve is manufactured by the American Balance Valve Co., of Jersey Shore, Penn., and the following description of it is supplied by the makers, with the exception of a few minor changes in the text.

Valve. The valve, Fig. 78, is similar to the "grid-iron" valve, it having two faces; one face operates on the valve seat proper (on the cylinder) and the other face operates against the face of the balance plate. Both faces of the valve are the same, and it has no crown, but is open throughout. The face of the balance plate, against which the top or back face of the

valve operates, being an exact duplicate of the cylinder valve seat and set in alignment therewith, whatever conditions exist on one face of the valve must also exist on the other face. The walls of the valve are provided with ports, which pass from face to face of the valve. These ports are functional, and their length and width depend upon whether the valve is to be double or single acting; that is, whether or not double admission and double exhaust openings are desired. The valve under consideration here is of the double acting type.

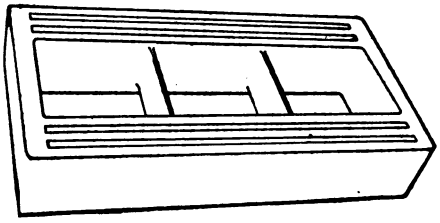

FIGURE 78

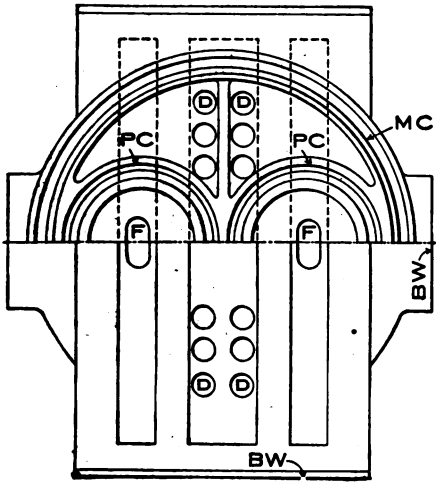

FIGURE 79

Balance Plate. The Balance Plate, Fig. 79, contains the balancing cones MC and PC (main cone and port cone), and two centering ring grooves which register with like grooves in pressure plate. It also supplies the means for double admission and double exhaust openings by admitting and exhausting steam

at the face of the plate at top of valve simultaneously with admission and exhaust at valve face and cylinder valve seat.

The face of the balance plate, Fig. 80, is an exact duplicate of the cylinder valve seat and forms a second valve seat against which the valve operates in unison with its operation on the cylinder valve seat, the second seat being held by means of the centering rings CR, Fig. 81, in exact alignment with the valve seat proper. The back or opposite side of the balance plate, Fig. 84, contains the following cones: one large or main cone (MC) and two small or port cones (PC) on the interior of the main cone, and on which the packing rings are placed, which forms the balancing feature to the valve, and the centering ring cones. The balance plate is provided with wings (BW) which fit 1-16 in. loose into the wings of the pressure plate (or into the steam chest itself), preventing excessive movement of plate. Taper or beveled packing rings set on the cones form joints against the pressure plate.

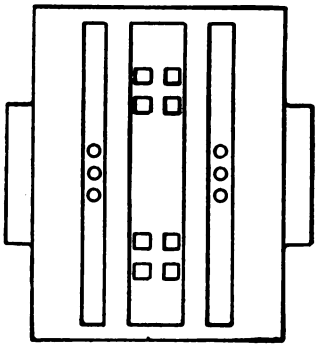

FIGURE 80

Pressure Plate. The pressure plate is made as a part of or separate from the chest cover. In the type of valve here referred to, the pressure plate is made separate (see Figs. 82, 83 and 84) and is provided with wings (W) which are machined to fit snugly into the steam chest; the chest being first centered with the valve seat by fitting over lugs on the cylinder, or by

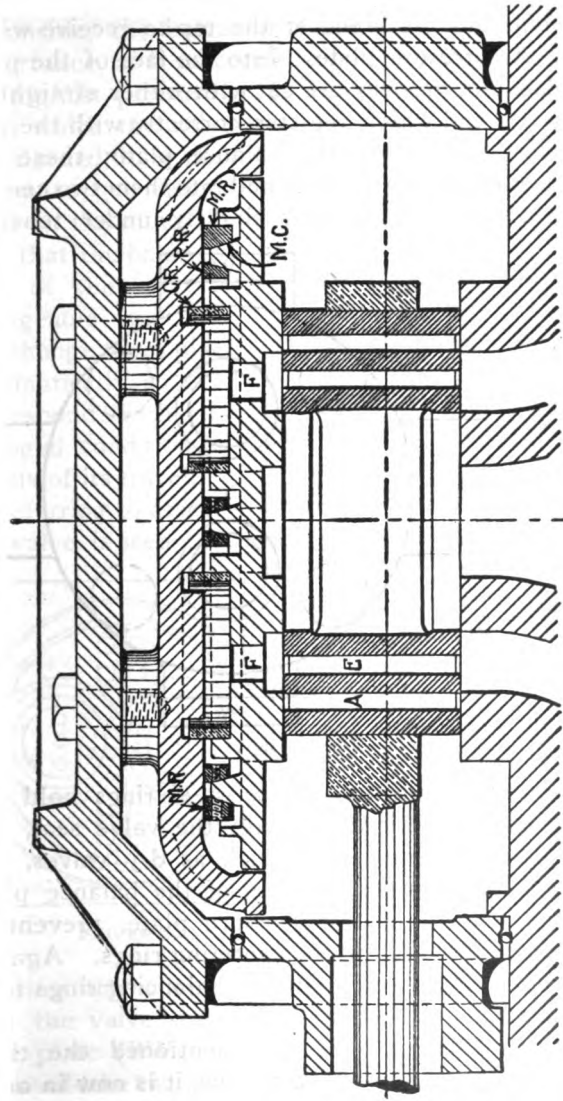

FIGURE 81

dowel pin, and machined at the top to receive wings (W) of the pressure plate. Into the face of the pressure plate two grooves are cut with either straight or taper walls and which register correctly with the corresponding grooves in the balance plate; these are called centering ring grooves and into them two centering rings (CR) are placed, slightly under tension.

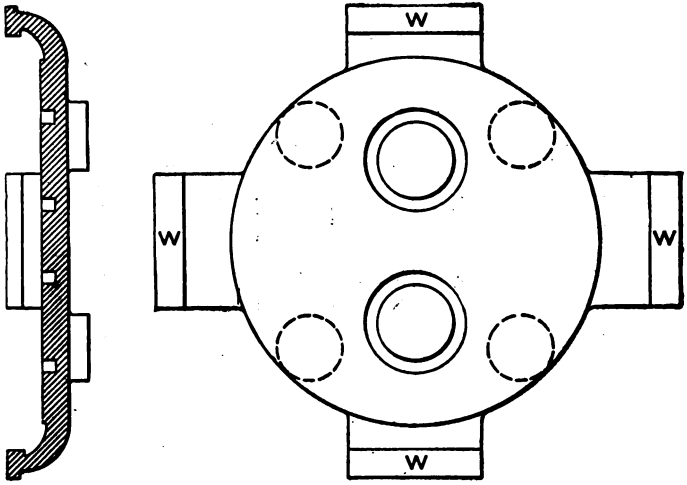

FIGURE 82

Under normal conditions these steel rings hold the balance plate in alignment with the valve seat, but under abnormal conditions, such as dry valves, the strain will be taken by the wing of the balance plate against the wing of the pressure plate, preventing excessive contraction of the centering rings. Against the face of the pressure plate the balancing rings form steam joints.

Balancing Feature. Having mentioned the three principal parts composing this valve, it is now in order

tc consider the balancing feature, which is of great importance, as it successfully protects the valve under the highest pressures. In considering the principle upon which the valve is balanced it is necessary to get clearly fixed in the mind the fact that the balanced area of the valve is changeable and that the change takes place automatically, so as to correspond with the changed condition of the valve on its seat at different points of its travel.

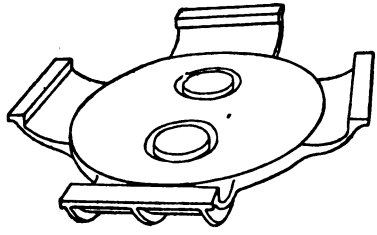

FIGURE 83

Referring to assembled cross sectional view, Fig. 81, the valve is seen in central position on the seat and the upper seat or face of balance plate in position corresponding with the valve seat. The steam chest is centered by machined faces fitting over machined lugs on the cylinder; on old power, dowel pins are used. The chest has finished strips at top into which the finished ends of the wings of the pressure plate (W) fit snugly, thus insuring the central position of the pressure plate over the valve seat. The finished wings of the balance plate (BW) fit 1-16 in. loose between inside faces of the wings of the pressure plate, but the

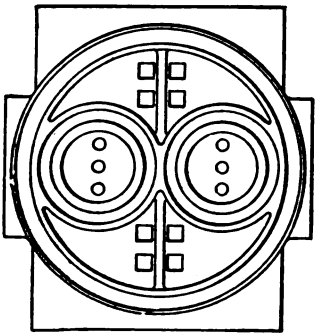

FIGURE 84

balance plate is held perfectly central by two steel centering rings (CR). The tops of the cones on the balance plate are ⅛ inch from the face of the pressure plate, allowing the balance plate to lift ⅛ inch off from the valve, which affords perfect relief to the cylinder while the engine is drifting and for the relief of water from the cylinder. This ⅛-inch clearance in height adjustment must be maintained. The main balancing ring (MR) is made the proper diameter to balance the valve as great as possible while in its central (or heaviest) position, there being just sufficient area left on to insure the balance plate being held steam-tight on the valve. The interior of the main ring is open to the atmosphere through the holes D, which lead to the exhaust cavity of the valve.

The valve is thus balanced so that it will move perfectly easy in its heaviest position, but conditions are changed by the opening of a steam port (and at instant of cut-off. See Fig. 85), at which time the ordinary slide valve is subjected to the upward pressure of the steam in the cylinder port, and if properly balanced in central position would, at this position, be thrown off its seat, but in this valve the port pressure (whatever it may be) has free access to both sides of the valve by reason of the passages through the valve to the port in the face of the balance plate which corresponds with the cylinder port; therefore the pressure in the port has no effect whatever upon the valve, it being on both sides of the valve face in equal area, and pressure, is, therefore, equalized so far as the valve is concerned, but the pressure in the port of the balance plate would lift the plate off from its seat on the valve if it was not also equalized, or annulled; therefore a port ring, PR, of proper area to balance this pressure,

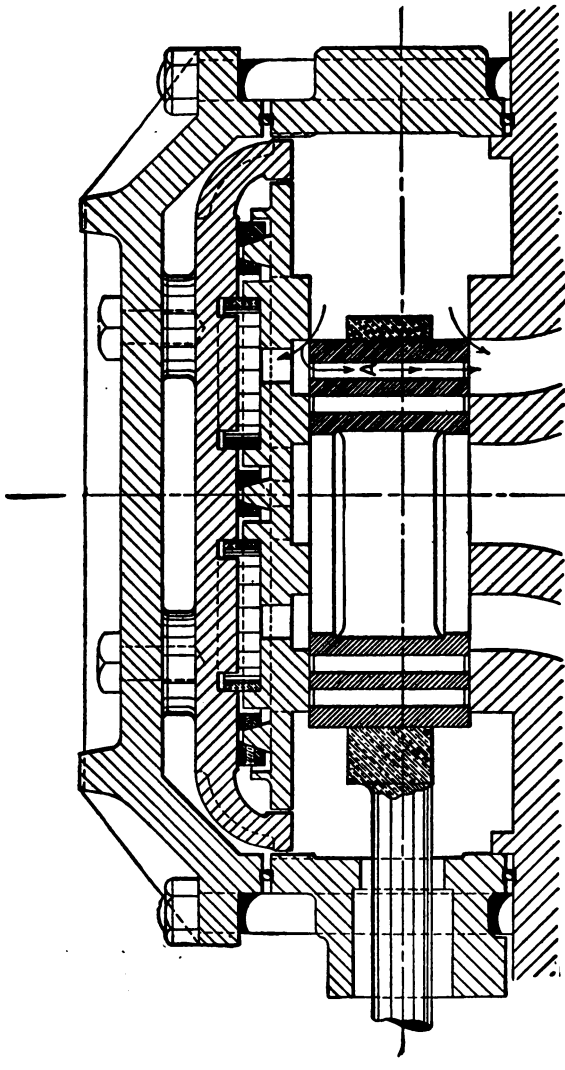

FIGURE 85

is placed over each port in the inside of the main ring on the top of the balance plate and is open to the port through passage F, Fig. 81, so that a pressure equal to that in the steam port is always on both sides of the balance plate, as well as on both sides of the valve, and the port pressure is rendered inoperative on the valve or on the balance plate. Communication from the cylinder port, through the valve and through the balance plate to the interior of the port ring, P R, cannot be shut off at any time, but is maintained throughout the travel of the valve. Therefore the same pressure that is in the port at any given time is also on both sides of valve and pressure plate in the same area, and the port pressure is, therefore, not considered in figuring the main balance for the valve.

There is another position of the valve during its stroke where the slide valve is subjected to an upward pressure, or pressure against its face, which tends to lift it from its seat; that position is at over-travel of the valve face over the valve seat; this position is shown in Fig. 86, but in this valve it will be observed that the top face or back of the valve travels out from under the seat of the balance plate exactly to the same extent that it over-travels the cylinder seat, and pressure is, therefore, equal on both sides of that portion of the valve that is over the seat at any point of travel. With the main ring balancing the valve fully in its central or heaviest position, the port ring balancing the port pressure, and over-travel of the valve on its seat being equalized by equal exposure at top and bottom, it will be clear that the valve is fully balanced in all positions of stroke, and is, therefore, available for high pressures.

The double admission of steam to the cylinder and

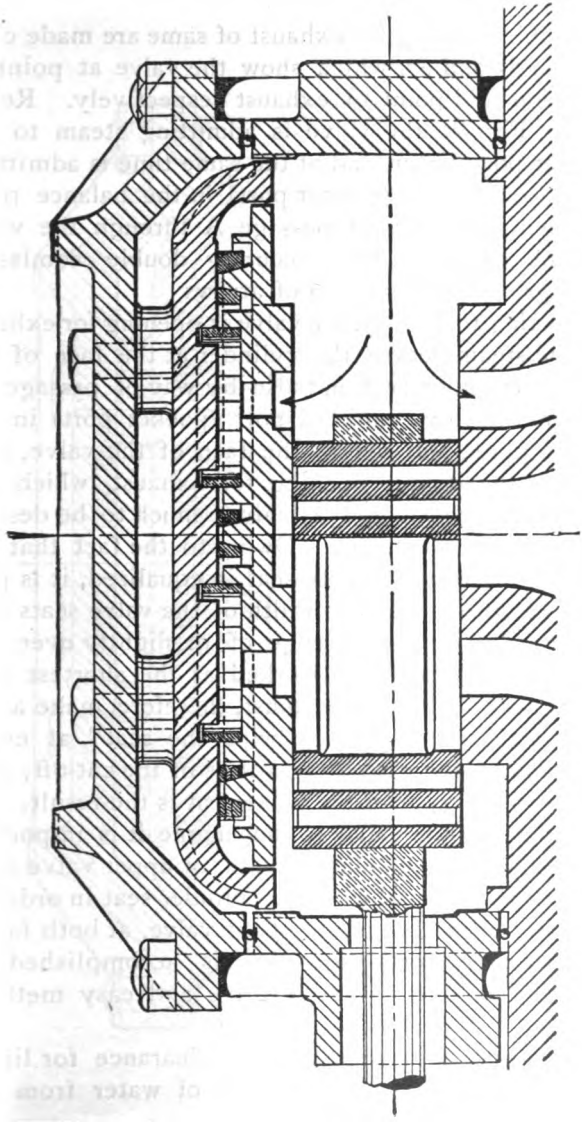

FIGURE 86

the double opening for exhaust of same are made clear in Figs. 85 and 87, which show the valve at point of admission and point of exhaust respectively. Referring to Fig. 85, the valve is admitting steam to the cylinder port direct, and at the same time is admitting steam to the port (pocket port) in the balance plate and thence by way of passage A through the valve into the cylinder, thus securing double admission openings. Note direction of arrows.

Referring to Fig. 87, the valve is opening for exhaust and the steam leaves the cylinder at the face of the valve at cylinder seat and also by way of passages E through the valve into the port (pocket port) in the balance plate, and out at the face of the valve, thus securing the double opening for exhaust, which has always been considered a feature much to be desired in the locomotive valve. Owing to the fact that the travel of the valve over its seat is equalized, it is possible to so proportion the width of the valve seats that the valve travels to the edge of, or slightly over, the seat when the engine is worked at the shortest possible cut-off, and the valve must, therefore, make a full stroke across the seat or "wipe the seat" at every revolution of the wheel, regardless of the cut-off; perfectly straight wear of the valve seat is the result.

In applying the valve to the engine it is important that the face of the balance plate, or upper valve seat, shall be in alignment with the cylinder seat in order to secure simultaneous action of the valve, at both faces, as previously explained; this is accomplished in various ways, one, a very positive and easy method, being shown here.

The height adjustment is ⅛-in. clearance for lift of valve or balance plate for relief of water from the

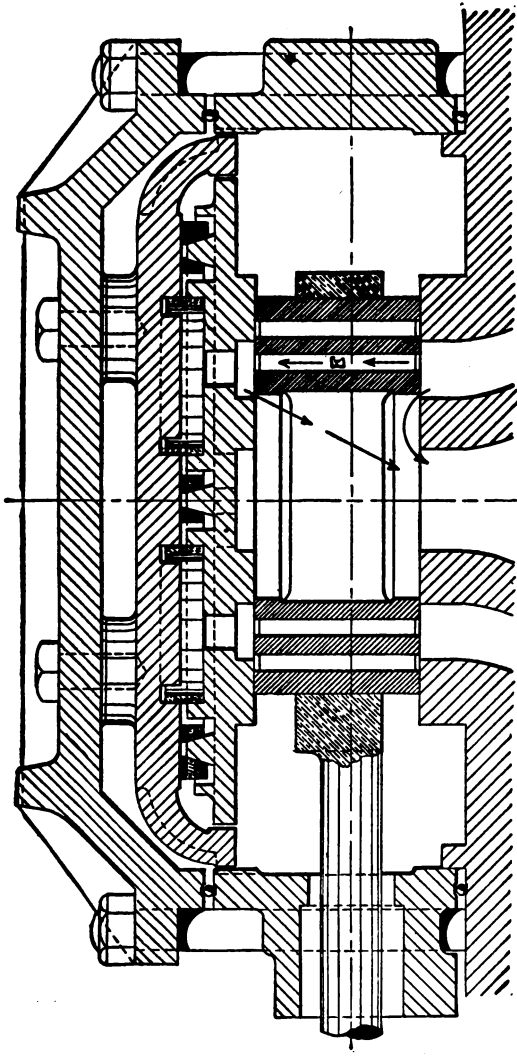

FIGURE 87

cylinder and to open direct communication from one side of the piston to the other for the free passage of air in drifting. In this connection, it should be observed that the balance plate will leave its seat on the valve while the valve remains on the valve seat, and that, while the balance plate is off its seat, direct communication from one cylinder port to the other is always maintained by reason of the ports AE through the valve; this affords the most perfect air relief for drifting.

The packing rings remain stationary and are, therefore, subject to practically no wear; they afford full automatic adjustment to position and for wear of valve faces and are free from danger of breakage or derangement.

The Richardson Balanced Valve. This form of balanced slide valve, together with the Allen-Richardson balanced slide valve, is manufactured by H. G. Hammett of Troy, New York, and is largely used on locomotives. Figs. 88 and 89 represent transverse and longitudinal sections through the center of an ordinary locomotive steam chest fitted with the Richardson valve. Fig. 90 shows a plan of the valve, and Fig. 91 is an elevation of one end of the packing strips and spring, the only alteration being the addition of the balance plate, PP, Fig. 88, and the substitution of a valve adapted to receive the packing strips S, S, S, S.

It will be noticed in this instance that the balance plate is bolted to the cover of the steam chest, but these may be cast in a single piece. The four sections of packing enclose a rectangular space, R, Fig. 90, which equals in its area the total amount of valve surface which is to be relieved of excess pressure, the packing strips preventing the steam from entering

this space, and the small hole X, communicating with the exhaust cavity in the valve, relieves space R from any possible accumulation of pressure.

The four packing strips consist of two longer ones, which are simply rectangular pieces of cast iron, while the two shorter ones, Fig. 91, have gib-shaped ends to retain them in their proper position. Beneath each packing strip a light elliptic spring, shown in Fig. 91,

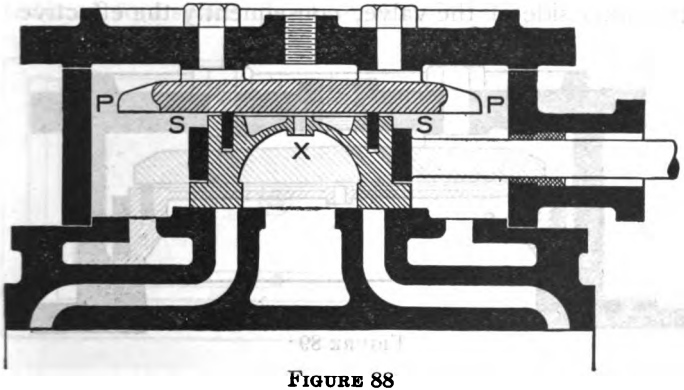

FIGURE 88

is placed which holds these strips in position against the balance plate when steam is shut off.

In operation these different sections maintain a steam-tight contact, by a direct steam pressure, with the balance plate and with the inner surfaces of the grooves provided to receive them, the joint being secured by the abutting of the ends of the two longer sections against the inner surfaces of the gibbed sections at the four corners.

The Allen-Richardson Balanced Slide Valve. The Allen valve is designed to at least partly prevent the wire-drawing of the steam, when high speeds are

maintained with the valve cutting off early in the stroke.

In the Allen valve, an additional passage for the inlet of steam is furnished, as will be clearly seen by referring to Figs. 92 and 93. These are transverse and longitudinal sections through the valve and steam chest, and it will be noticed that, when the steam port is open one-half inch in the ordinary manner, the port of the cored passage is also open to a like extent on the other side of the valve; consequently the effective

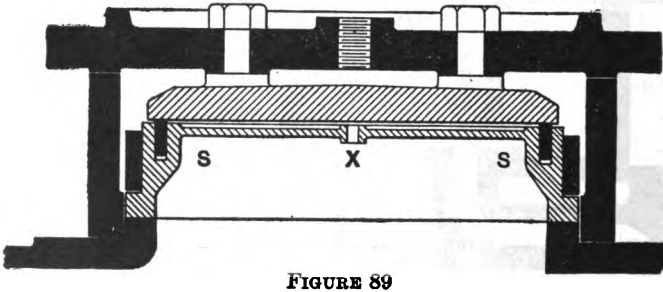

FIGURE 89

area of the steam port is doubled, and is thus the actual equivalent of a single port with a one-inch opening.

The wire-drawing incident to running at high speeds with the valve cutting off early in the stroke, is thus greatly diminished, with a resultant economy of steam and fuel. A reduction of wire-drawing carries with it a higher average pressure on the piston when working at a similar cut-off; consequently the usual average pressure can be maintained with a shorter cut-off, resulting in an appreciable economy. While the unbalanced Allen valve, therefore, secures a better and more economical distribution of steam, its use entails certain disadvantages.

On the face of a slide valve, the area of bearing surface is never sufficient to secure its wearing well under a heavy steam pressure; and this wearing surface is yet further reduced in the Allen valve, owing to its internal steam ports. This internal passage actually divides the valve into two parts, and the steam pressure, acting on the outer part, springs and bends its working face below that of the internal or exhaust port of the valve. The available wearing face is consequently reduced to a space about one-half as wide as the out-

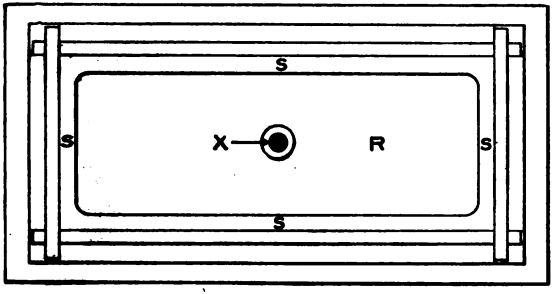

FIGURE 90

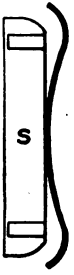

FIGURE 91

side lap of the valve, and this fully accounts for the rapid wearing of the unbalanced Allen valve, and for the trouble and expense of constantly refacing valves and seats, and the loss of the steam blown through leaky valves quite offsets the advantages gained by a reduction of wire-drawing.

These manifest disadvantages are entirely overcome by a proper balancing of the valve, which secures all of the advantages of the Richardson device, plus an increased steam economy resulting from using the Allen ports.

To secure the best possible results from the employ-

ment of the Allen balanced valve, its ports and bridges should exceed the full travel of the valve by at least one-eighth of an inch, and the radius of the link should always be as long as permissible to escape an excessive increase of lead when cutting off early in the stroke.

The Young Valve and Gear. During the past four years there has been brought to the front a valve which, while not a balanced valve in the ordinary acceptance of the term, as applied to locomotives,

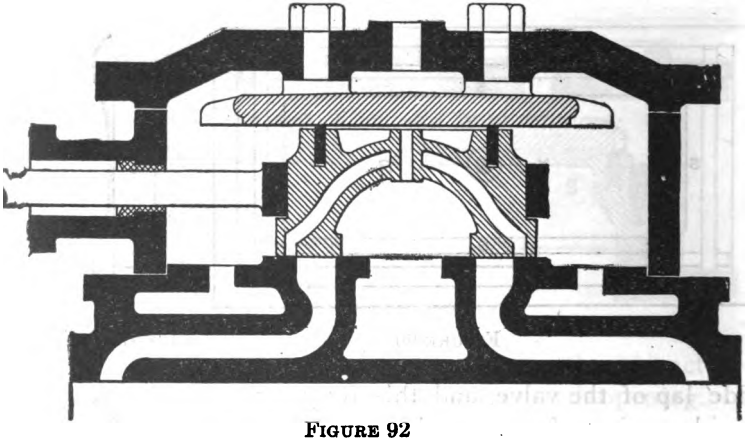

FIGURE 92

nevertheless gives or appears to give as good a distribution of the steam as either the balanced slide valve or the piston valve, while at the same time its operation is accomplished with a minimum of friction and strain on the valve gear. This is the Young valve and gear, the invention of Mr. O. W. Young of Chicago. The results obtained by the practical use of this valve on one of the engines of the Chicago & Northwestern Railway, especially during the past

year, seem to warrant the conclusion that it has many meritorious features, and that a bright future lies before it.

A general idea of the construction of the valves, and the wrist plate by which they are operated, may be obtained by reference to Fig. 94, which is a sectional elevation showing the steam and exhaust ports, and a sectional view of the two valves, one for each end of the cylinder. The arrows clearly indicate the course of the steam in its passage into, and out of, the cylinder.

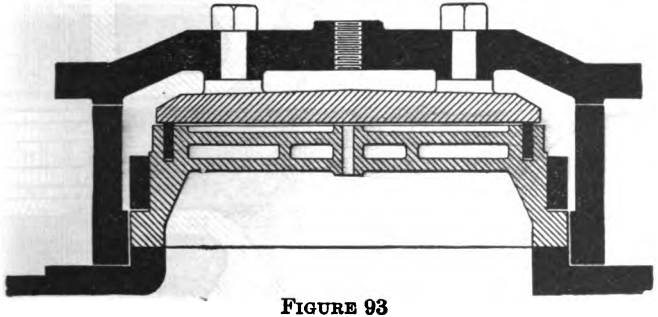

FIGURE 93

It is claimed for this system that irregularities in lead are corrected for the shorter points of cut-off, and the indicator diagrams shown in Figs. 96 and 97 certainly show an excellent steam distribution for all points of cut-off.

The author desires to say in this connection that he has seen the originals of these diagrams as taken from engine 1026 of the C. & N. W. Ry. and can vouch for their correctness.

The following brief description of this valve is furnished by the inventor:

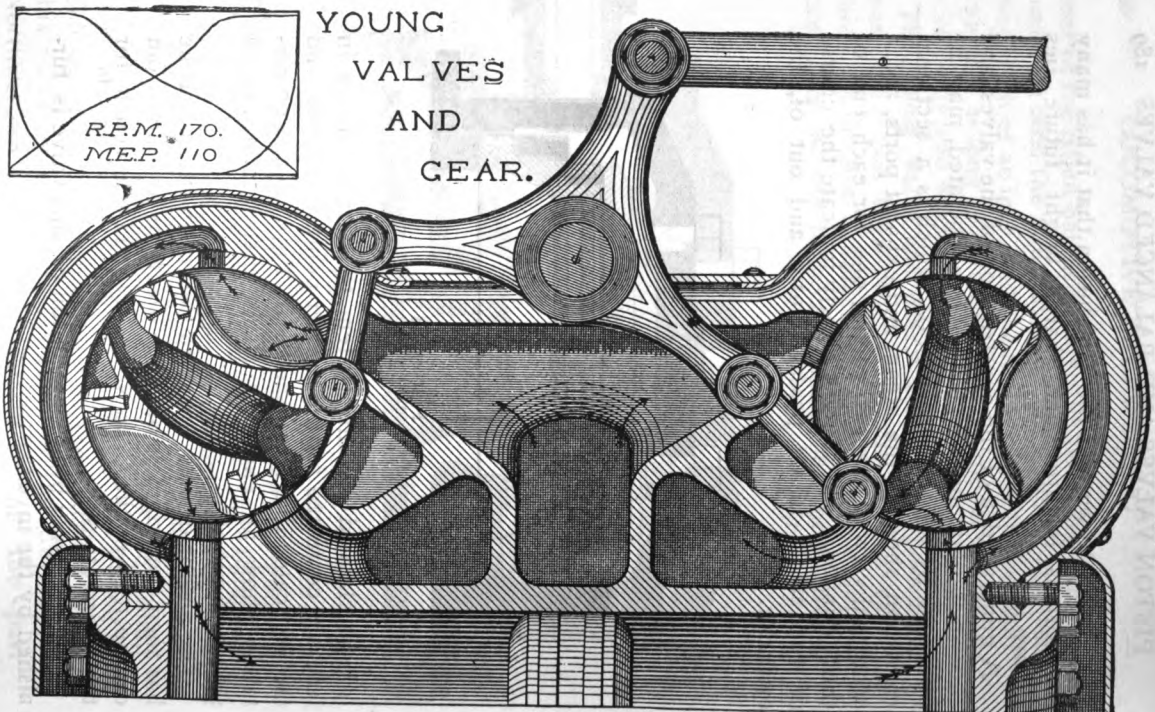

FIGURE 94

The Young valve and gear is an adaptation of the Corliss principle to suit requirements in locomotive practice, and consists of two valves for each cylinder, operating alternately as inlet and outlet and driven by the Corliss wrist motion, used in connection with the Stephenson link. An original device is provided for correcting the irregularities in lead, and either a constant or a slightly increased steam lead for the shorter cut-offs can be obtained, and an excessive preadmission of steam avoided. The exhaust lead, by this device, is caused to increase as the cut-off is shortened and permits an exhaust lap for long cut-offs, changing to exhaust clearance for a short cut-off, thus securing the maximum of power while starting (as shown by the straight back pressure line in the indicator cards) and sufficiently late compression to prevent the terminal pressure from exceeding the initial pressure even at very high speeds, and this is accomplished without the aid of by-pass or compression valves of any description.

The valves consist of a plurality of cast iron strips encompassing the exhaust cavity and partitioning the live from exhaust steam, and are each free to move to- ds and from their seat independent of each other; each following its individual path of travel and adjusting itself to any irregularities in the seat over which it moves, thus reducing leakage to a lower amount than is usually accomplished. The valve body or carrier is journaled at each end and its weight supported entirely clear of the valve seat, the only weight on the seat being that of the strips; the tendency, therefore, towards cutting, as compared with a heavy slide valve, is reduced to a very small percentage, and the necessity for liberal lubrication is obviated. The valve stems in their passage through the walls of the

steam chest require no lubrication or packing. They will continue steam-tight and require no attention between shoppings in the way of taking up lost motion. Valve renewals are confined to the substitution of one or more strips.

The valve gear consists of the ordinary Stephenson link, eccentrics, and rocker-arm as far as the end of the valve stem, which is connected to the wrist plate.

From the wrist plate extend short hinged connecting rods to crank arms on the two rotative valve spindles.

The wrist plates are located between the cylinder saddles and the steam chests, and rotate on trunnioned bearings.

Fig. 95 shows a general plan and elevation of this system. The device for correcting the lead is operated in the following simple manner:

By reference to Fig. 95 it will be seen that a horizontal shaft extends across the back of the cylinder saddle, and that this shaft is fitted with two cranks that connect with the bearings of the wrist plates. From the center of this shaft a long connecting rod extends back to a short crank arm on the tumbling shaft. So that when the link is raised or lowered from the central position, the wrist plate is raised to regulate the lead. Experiments with this valve show that the best results are obtained by allowing about ⅛ in. more lead for the shorter cut-off. The valve chests are fitted with 10-in. bushings, within which the valves rotate. These bushings are made of soft cast iron, and the valves, as has already been explained, are fitted with cast iron packing strips.

The clearance in the cylinder of the first locomotive equipped with this device was 3 per cent and in the second engine it was 6 per cent Experience thus far

PISTON VALVES AND BALANCED VALVES

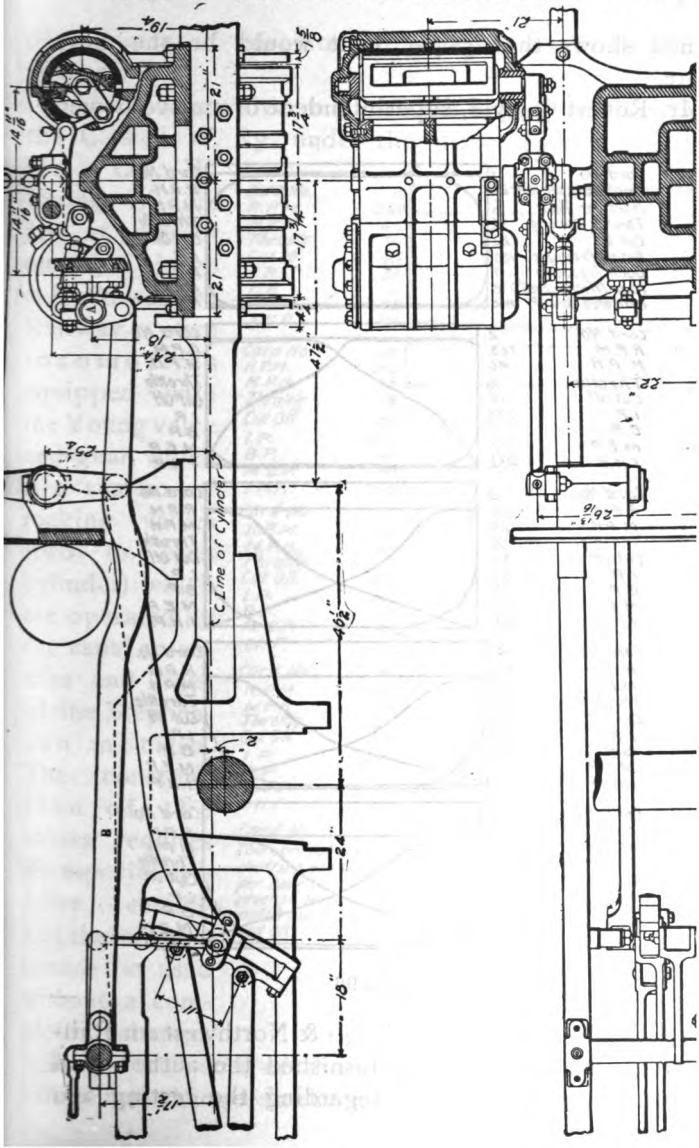

gained shows that 5 per cent would be the best figure.

Mr. Robert Quayle, superintendent of motive power

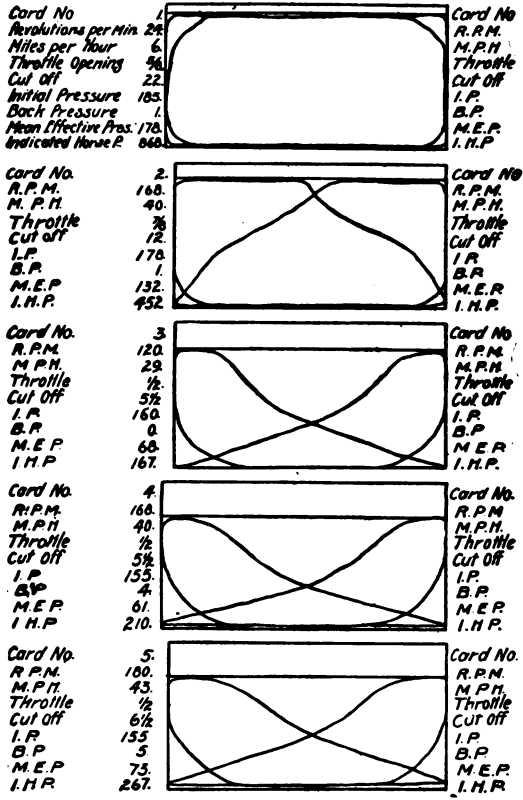

FIGURE 96

and machinery for the Chicago & Northwestern Railway Company, has kindly furnished the author with the following information regarding the testing and

development of this interesting device on the Northwestern.

"The Young valve and gear has been developed on the C. & N. W. Ry. under the direct supervision of Mr. O. W. Young. There are at present on the Chicago & Northwestern Railway two locomotives equipped with the Young valve and gear, which is a system of rocking valves (two to each cylinder) which are operated by the usual eccentrics and links of the Stephenson motion. The construction of the valves requires an especial cylinder casting and therefore it cannot be used without a complete change.

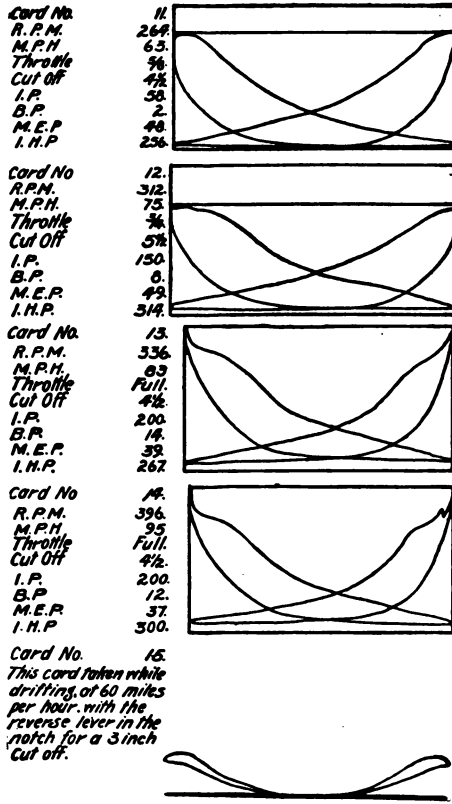

FIGURE 97

The actual cost of these cylinders, including the valves and changes in the motion, should not exceed

thirty per cent more than the cost of cylinders, valves, chests, etc., for a D or piston valved locomotive. If, however, these cylinders were made standard to a road, I do not think they would cost more than $150 more per locomotive.

In June, 1901, the first engine was equipped, and, like all first attempts, there were certain details shown up which needed improvement. The general results with this engine justified a second trial, and in September, 1903, a set of cylinders with the special valves and their motion were applied to a 20 × 26″ Atlantic type (passenger) engine with 81″ over the tires and 91,000 lb. on the drivers. The experiments with this engine lasted some six or eight weeks, and in November, 1903, the engine was put regularly into service on the Galena division. The engine has been a "tramp" up to a very recent date; has had all kinds of service, all kinds of engineers handling her, and practically continuous service. It has so far made approximately 90,000 miles. The tires have not been turned, the eccentric straps have been closed once about $\frac{1}{16}$ in. each, there is no pound in the boxes and the tool marks are still on the motion pins. These results are especially interesting to the motive power official, demonstrating as they do that the wear and tear on the machinery is so remarkably less than the engine with the D or piston valves. The engine is always ready for service, the roundhouse foreman reporting that for his part of it, five of this type would easily equal seven of the piston valve engines. There is one run between Chicago and Clinton, with usually ten heavy cars, on which this engine is the only one that can make the time.

The train dispatchers know the value of this engine,

also, as they do not hesitate to rely on it to make up time or take an unusually heavy run. As a consequence the improvements shown by the indicator cards are not entirely realized in actual performance records. In a series of comparisons made by the indicator the water rate per indicator horse-power was reduced from 22.9 lb. to 19.3 lb. The indicator cards also show the cause for the slight wear on the machinery, as the cards are remarkably full, the expansion lines being clear and distinct at all points of cut-off. Most of the work in passenger service is done at less than 6 in. cut-off. On account of the high and full cards it is evident that the crank effort is uniform and higher than a slide valved engine. Besides causing less wear on the machinery, this gives a more even torque when starting and the consequent less slipping.

The engine is one which will bear thorough investigation. While our experiments have been made in passenger service, I consider that the performance in freight service will show even better results from both an operation and economical standpoint."

It should not be inferred that the Young valves are designed for light throttle conditions only. These engines, as will be seen by reference to Figs. 96 and 97, respond readily to a wide open throttle, and one diagram, No. 14, shown in Fig. 97, indicates a speed of 396 R. P. M. and 95 miles per hour, with full throttle and cutting off at four inches.

Fig. 98 shows a general view of engine 1026 of the C. & N. W., which engine is equipped with this valve.

QUESTIONS

262. Are there any other types of valves used on locomotives, besides the D slide valve?

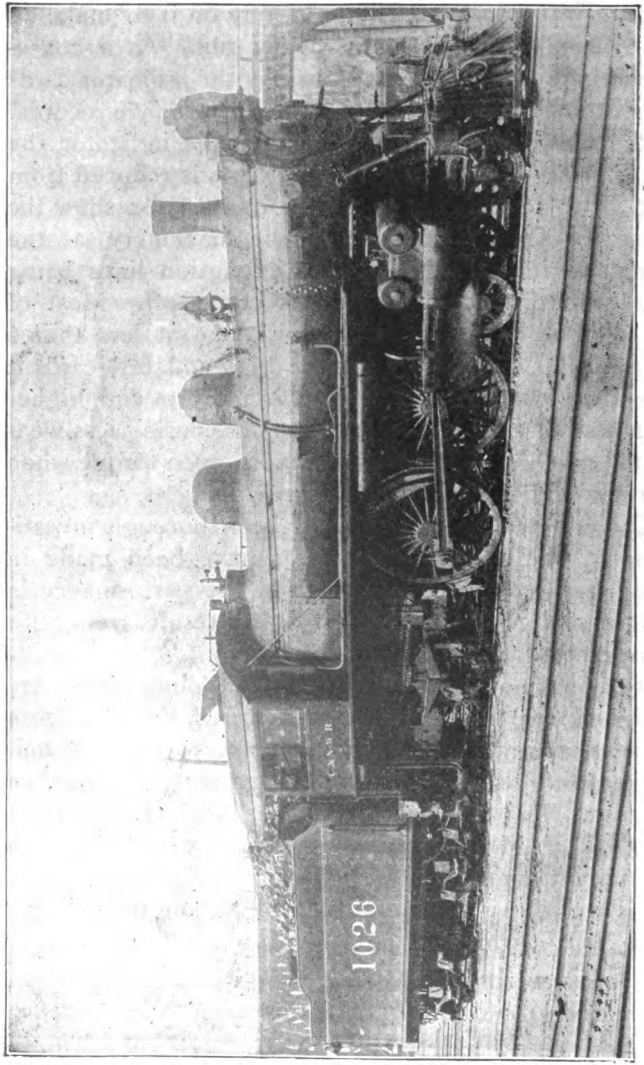

FIGURE 98

263. Mention a few of them.

264. What is the principal objection to the D slide valve?

265. Is the piston valve a perfectly balanced valve?

266. What pressure tends to press the D valve against its seat?

267. Is there any pressure to counteract this?

268. What are the causes of friction in piston valves?

269. Are all piston valves outside admission valves?

270. Why are piston valves practically balanced?

271. Why are piston valves made as long as possible?

272. What controls the admission of steam to the ports of a piston valve engine?

273. How is an outside admission piston valve set?

274. How is an inside admission valve set?

275. What advantage results from using an inside admission piston valve?

276. Name another advantage in inside admission.

277. What is one of the first duties of an engineer taking charge of a piston valve engine?

278. Why should he do this?

279. Are all engines equipped with indirect valve gear?

280. Repeat four simple rules for the guidance of an engineer in the study of valve gear.

281. Mention four possible combinations that may have to be dealt with.

282. In the first two of these, what are the positions of the eccentrics with relation to the crank pin?

283. What time would the hands of your watch indicate to represent this setting?

284. What would be the positions of the eccentrics relative to the crank pin in the third and fourth combinations?

285. What time would your watch indicate in order to correspond with this setting?

286. What is a good rule to remember in setting piston valves?

287. What type of piston valve does the American Balance Valve Co. manufacture?

288. Describe in general terms the construction of this valve.

289. What force expands the packing rings of this valve?

290. What prevents excessive expansion of these rings?

291. What is a common defect of snap ring piston valves?

292. How may the valve cage be worn unevenly?

293. What should a piston valve do in order to give efficient service?

294. What type of piston valve appears to be the favorite with builders?

295. Mention another advantage possessed by the piston valve over other forms of slide valves.

296. What does the term balanced valve include in its definition?

297. Have there been very many types of balanced valves tested on locomotives?

298. By whom is the Jack Wilson high pressure valve manufactured?

299. Give a short description of this valve.

300. Is it single acting or double acting?

301. What is the function of the balance plate?

302. What is the object of the pressure plate?

303. Is this valve balanced at all points of its travel?

304. What advantage is gained by having the valve

make a full stroke across the seat at every revolution?

305. Describe the Allen-Richardson balanced valve.

306. How is the balance plate of the Richardson valve secured in place?

307. How is a steam-tight contact maintained between the upper surface of the valve and the balance plate?

308. How are these packing strips held in position?

309. Does the unbalanced Allen valve wear well?

310. What is the object of the internal passage in the Allen valve?

311. In what respect does the Young valve differ from the majority of valves as applied to locomotives?

312. What is claimed for this valve with regard to lead?

313. Describe in general terms the Young valve and gear.

314. Where are the wrist plates located in this system?

315. Describe the device for automatically regulating the lead.

316. What is the diameter of the bushing within which the valve rotates?

CHAPTER VII

THE INDICATOR

The Indicator. One of the greatest aids to the economical operation of the steam engine is the indicator, and it is the privilege of every engineer to have at least an elementary, if not a thorough knowledge of its principles and working. The time devoted to the study of the indicator, and in its application to the engine, is time well spent, and the end will well repay the student of steam engineering.

Inventor. The indicator was invented and first applied to the steam engine by James Watt, whose restless genius was not satisfied with a mere outside view of his engine as it was running, but he desired to know more about the action of the steam in the cylinder, its pressure at different portions of the stroke, the laws governing its expansion after being out off, etc. Watt's indicator, although crude in its design and construction, contained embodied within it all of the principles of the modern instrument.

Principles. These principles are:

First. The pressure of the steam in the engine cylinder throughout an entire revolution, against a small piston in the cylinder of the indicator, which in turn is controlled or resisted in its movement by a spring of known tension, so as to confine the stroke of the indicator piston within a certain small limit.

Second. The stroke of the indicator piston is communicated by a multiplying mechanism of levers and parallel motion to a pencil moving in a straight line; the distance through which the pencil moves being

governed by the pressure in the engine cylinder and the tension of the spring.

Third. By the intervention of a reducing mechanism and a strong cord, the motion of the piston of the

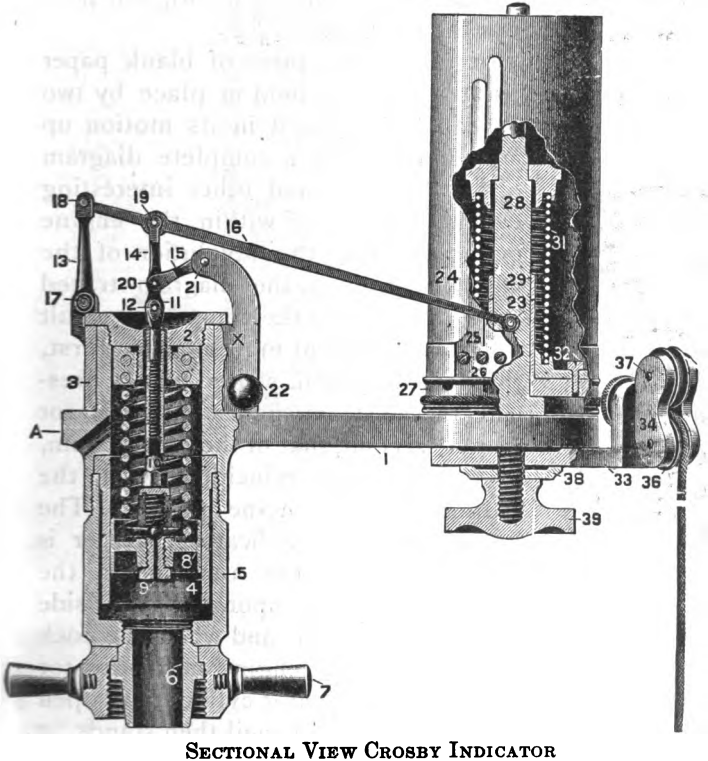

SECTIONAL VIEW CROSBY INDICATOR

engine throughout an entire revolution is communicated to a small drum attached to and forming a part of the indicator. The movement of the drum is rotative and in a direction at right angles to the movement of the pencil. The forward stroke of the engine

piston causes the drum to rotate through part of a revolution and at the same time a clock spring connected within the drum is wound up. On the return stroke the motion of the drum is reversed, and the tension of the spring returns the drum to its original position and also keeps the cord taut.

To the outside of the drum a piece of blank paper of suitable size is attached and held in place by two clips. Upon this paper the pencil in its motion up and down traces a complete diagram of the pressures and other interesting events transpiring within the engine cylinder during the revolution of the engine. In fact, the diagram traced upon the paper is the compound result of two concurrent movements. First, that of the pencil, caused by the pressure of the steam against the indicator piston; second, that of the paper drum, caused by, and coincident with, the motion of the engine piston. The upper end of the indicator cylinder is always open to the atmosphere, the steam acting only upon the under side of the small piston, and when the cock connecting the cylinders of the engine and indicator is closed, both ends of the indicator cylinder are open to atmospheric pressure, and the pencil then stands at its neutral position. If now the pencil is held against the paper and the drum rotated either by hand or by connecting it with the cord, a horizontal line will be traced. This line is called the atmospheric line, meaning the line of atmospheric pressure, and it is a very important factor in the study of the diagram.

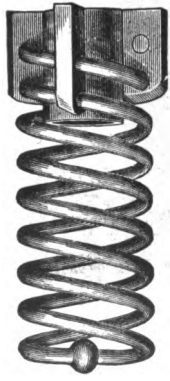

CROSBY INDICATOR SPRING

On a locomotive, the pencil, in tracing the diagram, will not, or at least should not, fall below the atmos-

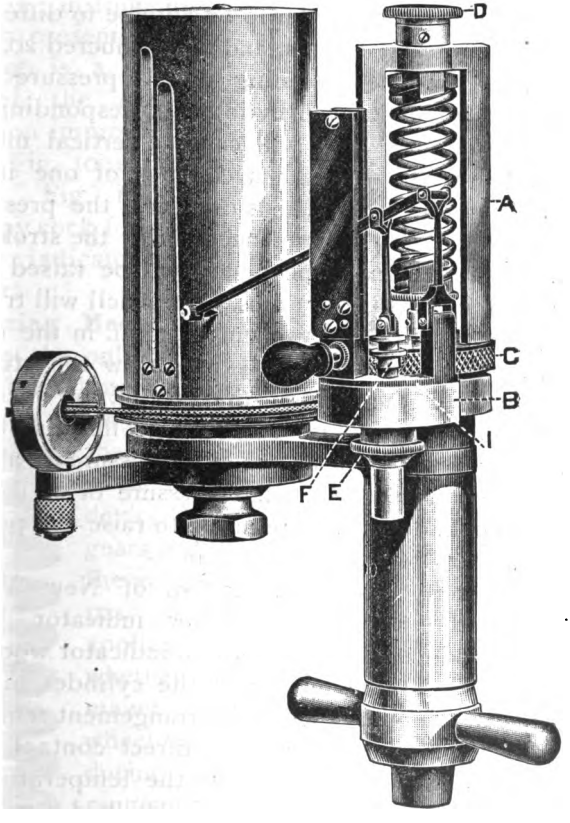

IMPROVED TABOR INDICATOR WITH OUTSIDE CONNECTED SPRING
ASHCROFT MFG. CO., N. Y.

pheric line at any point, but will on the return stroke trace a line called the line of back pressure.

As before stated, the length of stroke of the indi-

cator piston, and the pencil movement as well, is controlled by a spiral steel spring which acts in resistance to the pressure of the steam. These springs are made of different tensions, in order to be suitable to different steam pressures and speeds, and are numbered 20, 40, 60, etc., the number meaning that a pressure per square inch in the engine cylinder corresponding to the number on the spring will cause a vertical movement of the pencil through a distance of one inch. Thus, if a number 20 spring is used and the pressure in the cylinder at the commencement of the stroke is 20 lbs. per square inch, the pencil will be raised one inch, or if the pressure is 30 lbs., the pencil will travel 1½ in., and if there is a vacuum of 20 in. in the condenser, the pencil will drop ½ in. below the atmospheric line, for the reason that 20 in. of vacuum corresponds to a pressure of about 10 lbs. less than atmospheric pressure or an absolute pressure of about 4 lbs. If a 60 spring is used, a pressure of 60 lbs. in the engine cylinder will be required to raise the pencil one inch, or 90 lbs. to raise it 1½ in.

The Ashcroft Manufacturing Co. of New York, makers of the well known Tabor indicator, have recently introduced a new feature in indicator work by connecting the spring on top of the cylinder and in plain view of the operator. This arrangement removes the spring from the influence of direct contact with the steam, and it is subject only to the temperature of the surrounding atmosphere. It is claimed that as a result of this the accuracy of the spring is insured and that no allowance need be made in its manufacture for expansion caused by the high temperature to which it is subject when located within the cylinder. Another good feature of this design is, that the spring

can be easily removed without disconnecting any one part of the instrument in case it is desired to change springs. A cut of the improved instrument is herewith presented.

Fig. 99 is a sectional view of the American Thompson improved indicator. Fig. 100 shows the spring. Fig. 101 is a three-way cock for attaching the indicator to the cylinder.

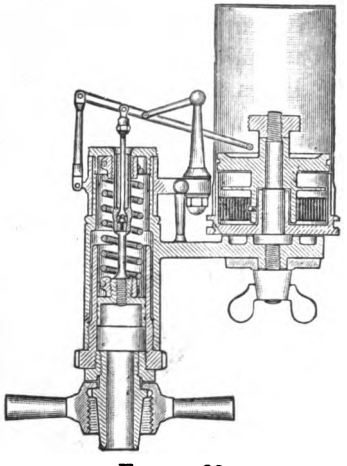

FIGURE 99

Reducing Mechanism. Probably the only practically universal mechanism for reducing the motion of the crosshead is the reducing wheel, a device in which, by the employment of gears and pulleys of different diameters, the motion is reduced to within the compass of the drum, and the device is applicable to almost any make of engine, whether of high or low speed. Some makers of indicators attach the reducing wheel directly to the indicator, thus producing a neat and very convenient arrangement. Fig. 102 shows the indicator complete, with reducing wheel attached.

FIGURE 100

Attaching the Indicator. The cylinders of most engines at the present time are drilled and tapped for indicator connections before they leave the shop, which is eminently proper, as no

engine builder, or purchaser either, should be satisfied with the performance of a new engine until after it has been accurately tested and adjusted with the indicator.

The main requirements in these connections are that the holes shall not be drilled near the bottom of the cylinder where water is likely to find its way into the pipes, neither should they be in a location where the inrush of steam from the ports will strike them directly, nor where the edge of the piston is liable to

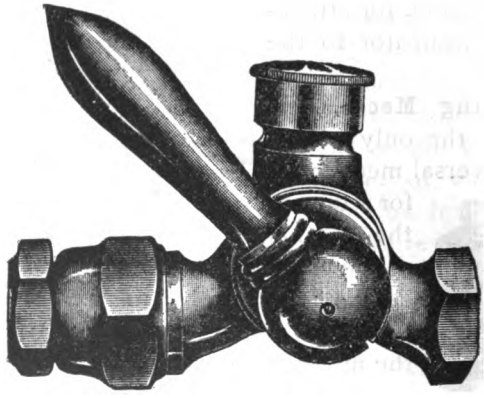

FIGURE 101

partly cover them when at its extreme travel. An engineer before he undertakes to indicate an engine should satisfy himself that all these requirements are fulfilled. Otherwise he is not likely to obtain a true diagram. The cock supplied with the indicator is threaded for one-half inch pipe, and unless the engine has a very long stroke it is the practice to bring the two end connections together at the side or top of the cylinder and at or near the middle of its length, where they can be connected to a three-way cock. The pipe

connections should be as short and as free from elbows as possible, in order that the steam may strike the indicator piston as nearly as possible at the same moment that it acts upon the engine piston.

These pipes should always be thoroughly blown out and cleaned, by allowing the steam to blow through

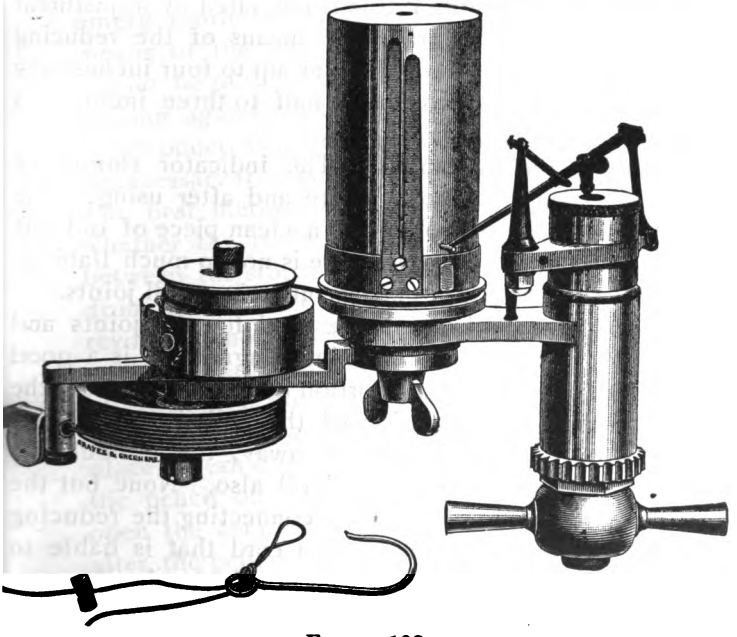

FIGURE 102

the open three-way cock during several revolutions of the engine, before connecting the indicator. If this is not done there is a moral certainty that dirt and grit will get into the cylinder of the indicator and cause it to work badly, and give diagrams that are misleading. As before stated, the height of the diagram depends

upon the tension or number of the spring. It is a convenient practice to select a spring numbered one-half of the boiler pressure, as, for instance, suppose gauge pressure or boiler pressure is 200 lbs. per sq. in., then a 100 spring would give a diagram 2 inches in height, which is a convenient height. As to the length of the diagram, this is regulated by adjustment of the cord in its travel, by means of the reducing wheel. Any length of diagram up to four inches may be obtained, but two and a half to three inches is a very good length for analysis.

Care of the Instrument. The indicator should be cleaned and oiled both before and after using. The best material for wiping it is a clean piece of old soft muslin of fine texture, as there is not so much liability of lint sticking to, or getting into, the small joints.

Good clock oil should be used for the joints and springs, and just before taking diagrams it is a good practice to rub a small portion of cylinder oil on the piston and on the inside of the cylinder, but when about to put the instrument away, these should be cleaned and oiled with clock oil also. None but the best cord should be used for connecting the reducing wheel with the crosshead, as a cord that is liable to stretch will cause trouble. Suitable cord, and also blank diagrams, can generally be obtained from firms engaged in manufacturing and selling indicators. After the indicator has been screwed on to the cock connecting with the pipe, the cord must be adjusted to the proper length before hooking it on to the drum. This must be done while the engine is running, by taking hold of the loop on the cord connected with the crosshead with one hand, and with the other hand grasp the hook on the cord attached to the reducing

wheel; then, by holding the two ends near each other during a revolution or two of the crank pin, it will be seen whether the long cord needs to be lengthened or shortened. Care should be exercised in placing the paper on the drum to see that it is stretched tight and firmly held by the clips. The pencil point, having been first sharpened by rubbing it on a piece of fine emery cloth or sandpaper, should be adjusted by means of the pencil stop with which all indicators should be provided, so that it will have just sufficient bearing against the paper to make a fine, plain mark. If the pencil bears too hard on the paper it will cause unnecessary friction and the diagram will be distorted. The best method of ascertaining this fact and also whether the travel of the drum is equally divided between the stops, is to place a blank diagram on the drum, connect the cord and while the engine makes a revolution hold the pencil against the paper. Then unhook the cord, remove the paper and if the travel of the drum is not divided correctly it can be changed.

Having thus arranged all the preliminary details, place a fresh blank on the drum, being careful to keep the pencil out of contact with it, connect the cord, open the cock admitting steam to the indicator, and after the pencil has made a few strokes to allow the cylinder to become warmed up, then gently swing it around to the paper drum and hold it there while the engine makes a complete revolution. Then move the pencil clear of the paper, close the cock and unhook the cord. Now trace the atmospheric line by holding the pencil against the paper while the drum is revolved by hand. This method of tracing the atmospheric line is preferable to that of tracing it immediately after closing the cock and while the drum is

still being moved by the engine, for the reason that there is not so much liability of getting the atmospheric line too high owing to the presence of a slight pressure of steam remaining under the indicator piston for a second or two just after closing the cock; also the line drawn by hand will be longer than one drawn while the drum is moved by the motion of the engine and will therefore be more readily distinguished from the line of back pressure.

Having secured a truthful diagram, it now remains to take as many as are desired, and they should follow each other as rapidly as possible, in order that each pair of diagrams may be taken under the same conditions of initial pressure, cut-off, etc. In order to get accurate results, the operator should have an assistant posted in the cab, whose duty will be to watch the steam gauge, and see that other conditions are the same at least during the time a pair of cards is being taken. As soon as the diagrams are taken, the following data should be noted upon them: the end of cylinder, whether head end, or crank end, boiler pressure, revolutions per minute, miles per hour, throttle opening, cut-off. Other data, such as mean effective pressure, back pressure, indicated horse-power, and steam per indicated horse-power per hour, may be ascertained by an analysis of the diagrams, and should also be noted upon the back of each pair of diagrams after they have been found by calculation. The diagrams should be numbered, also, as they are taken.

The taking of indicator diagrams from locomotives has of late years been greatly facilitated by the use of electrical apparatus whereby any number of diagrams may be taken simultaneously. This is certainly a

great improvement over the old method of hand manipulation, especially for high speed engines.

In order to facilitate the study and analysis of indicator diagrams, the following definitions of technical terms, some of which have already been explained in another part of this book, are here given.

Absolute Pressure. Pressure reckoned from a perfect vacuum. It equals the boiler pressure plus the atmospheric pressure.

Boiler Pressure or Gauge Pressure. Pressure above the atmospheric pressure as shown by the steam gauge.

Initial Pressure. Pressure in the cylinder at the beginning of the stroke.

Terminal Pressure (*T. P*). The pressure that would exist in the cylinder at the end of the stroke provided the exhaust valve did not open until the stroke was entirely completed. It may be graphically illustrated on the diagram by extending the expansion curve by hand to the end of the stroke. It is found theoretically by dividing the pressure at point of cut-off by the ratio of expansion. Thus, absolute pressure at cut-off = 100 lbs., ratio of expansion = 5; then 100 + 5 = 20 lbs., absolute terminal pressure.

Mean Effective Pressure (*M. E. P.*). The average pressure acting upon the piston throughout the stroke minus the back pressure.

Back Pressure. Pressure which tends to retard the forward stroke of the piston. Indicated on the diagram from a non-condensing engine by the height of the back pressure line above the atmospheric line. In a condensing engine the degree of back pressure is shown by the height of the back pressure line above an imaginary line representing the pressure in the

condenser corresponding to the degree of vacuum in inches, as shown by the vacuum gauge.

Total or Absolute Back Pressure, in either a condensing or non-condensing engine, is that indicated on the diagram by the height of the line of back pressure above the line of perfect vacuum.

Ratio of Expansion. The proportion that the volume of steam in the cylinder at point of release bears to the volume at cut-off. Thus, if the point of cut-off is at one-fifth of the stroke, and release does not take place until the end of the stroke, the ratio of expansion, or in other words, the number of expansions, is 5. When the T. P. is known the ratio of expansion may be found by dividing the initial pressure by the T. P.

Wire-Drawing. When through insufficiency of valve opening, or contracted ports, the steam is prevented from following up the piston at full initial pressure until the point of cut-off is reached, it is said to be wire-drawn. It is indicated on the diagram by a gradual inclination downwards of the steam line from the admission line to the point of cut-off. Too small a steam pipe from boiler to engine will also cause wire-drawing and fall of pressure.

Condenser Pressure may be defined as the pressure existing in the condenser of an engine, caused by the lack of a perfect vacuum; as, for instance, with a vacuum of 25 in. there will still remain the pressure due to the 5 in. which is lacking. This will be about 2.5 lbs.

Vacuum. That condition existing within a closed vessel from which all matter, including air, has been expelled. It is measured by inches in a column of mercury contained within a glass tube a little over 30

in. in height, having its lower end open and immersed in a small open vessel filled with mercury. The upper end of the glass tube is connected with the vessel in which the vacuum is to be produced. When no vacuum exists the mercury will leave the tube and fill the lower vessel. When a vacuum is maintained in the condenser, or other vessel, the mercury will rise in the glass tube to a height corresponding to the degree of vacuum. If the mercury rises to the height of 30 in. it indicates a perfect vacuum, which means the absence of all pressure within the vessel, but this condition is never realized in practice; the nearest approach to it being about 28 in.

For purposes of convenience the mercurial vacuum gauge is not generally used, it having been replaced by the Bourdon spring gauge, although the mercury gauge is used for testing.

The vacuum in a condenser is generally maintained by an air pump, although it can be produced and maintained by the mere condensation of the steam as it enters the condenser by allowing a spray of cold water to strike it. The steam when it first enters the condenser drives out the air and the vessel is filled with steam, which, when condensed, occupies about 1,600 times less space than it did before being condensed; hence a partial vacuum is produced.

While the vacuum in a condenser cannot be considered as power at all, yet it occupies the anomalous position of increasing, by its presence, the capacity of the engine for doing work. This is owing to the fact that the atmospheric pressure or resistance which is always ahead of the piston in a non-condensing engine is, in the case of a condensing engine, removed to a degree corresponding to the height of the vacuum,

thus making available just so much more of the pressure behind the piston. Thus, if the average steam pressure throughout the stroke is 30 lbs. and there is a vacuum of 26 in. maintained in the condenser, there will be 13 lbs. of resistance per square inch removed from in front of the piston, thus making available 30 + 13 = 43 lbs. pressure per square inch.

Absolute Zero has been fixed by calculation at 461.2° below the zero of the Fahrenheit scale.

Piston Displacement. The space or volume swept through by the piston in a single stroke. Found by multiplying the area of piston by length of stroke.

Piston Clearance. The distance between the piston and cylinder head when the piston is at the end of the stroke.

Steam Clearance, Ordinarily Termed Clearance. The space between the piston at the end of the stroke and the valve face. It is reckoned in per cent of the total piston displacement.

Horse-Power (*H. P.*). 33,000 pounds raised one foot high in one minute of time.

Indicated Horse-Power (*I. H. P.*). The horse-power as shown by the indicator diagram. It is found as follows:

Area of piston in square inches × M. E. P. × piston speed in feet ÷ 33,000.

Piston Speed. The distance in feet traveled by the piston in one minute. It is the product of twice the length of stroke expressed in feet multiplied by the number of revolutions per minute.

R. P. M. Revolutions per minute.

Net Horse-Power. I. H. P. minus the friction of the engine.

Compression. The action of the piston as it nears

the end of the stroke, in reducing the volume and raising the pressure of the steam retained in the cylinder ahead of the piston by the closing of the exhaust valve.

Boyle's or Mariotte's Law of Expanding Gases. "The pressure of a gas at a constant temperature varies inversely as the space it occupies." Thus, if a given volume of gas is confined at a pressure of 50 lbs. per square inch and it is allowed to expand to twice its volume, the pressure will fall to 25 lbs. per square inch.

Adiabatic Curve. A curve representing the expansion of a gas which loses no heat while expanding. Sometimes called the curve of no transmission.

Isothermal Curve. A curve representing the expansion of a gas having a constant temperature but partially influenced by moisture, causing a variation in pressure according to the degree of moisture or saturation. It is also called the theoretical expansion curve.

Expansion Curve. The curve traced upon the diagram by the indicator pencil, showing the actual expansion of the steam in the cylinder.

First Law of Thermodynamics. Heat and mechanical energy are mutually convertible.

Power. The rate of doing work, or the number of foot-pounds exerted in a given time.

Unit of Work. The foot-pound, or the raising of one pound weight one foot high.

First Law of Motion. All bodies continue either in a state of rest or of uniform motion in a straight line, except in so far as they may be compelled by impressed forces to change that state.

Work. Mechanical force or pressure cannot be considered as work unless it is exerted upon a body and causes that body to move through space. The product

of the pressure multiplied by the distance passed through and the time thus occupied is work.

Momentum. Force possessed by bodies in motion, or the product of mass and density.

Dynamics. The science of moving powers or of matter in motion, or of the motion of bodies that mutually act upon each other.

Force. That which alters the motion of a body, or puts in motion a body that was at rest.

Maximum Theoretical Duty of Steam is the product of the mechanical equivalent of heat, viz., 778 ft. lbs., multiplied by the total heat units in a pound of steam. Thus, in one pound of steam at 212° reckoned from 32° the total heat equals 1,146.6 heat units. Then $778 \times 1{,}146.6$ equals 892,054.8 ft. lbs. = maximum duty.

Steam Efficiency may be expressed as follows: $\frac{\text{Heat converted into useful work}}{\text{Heat expended}}$ and maximum efficiency can only be attained by using steam at as high an initial pressure as is consistent with safety and at as large a ratio of expansion as possible. The percentage of efficiency of steam used at atmospheric pressure in a non-expansive engine is very low; as, for instance, the heat expended in the evaporation of one pound of water at 32° into steam at atmospheric pressure = 1,146.6 heat units, and the volume of steam so generated = 26.36 cu. ft.

One cubic foot of steam at 212° contains energy equal to $144 \times 14.7 = 2{,}116.8$ ft. lbs., and 26.36 cu. ft. = $2{,}116.8 \times 26.36 = 55{,}798.84$ ft. lbs., which divided by the mechanical equivalent of heat, viz., 778 ft. lbs. = 71.72 heat units, available for useful work. The per cent of efficiency, therefore, is $\frac{71.72 \times 100}{1{,}146.6} = 6.28$ per cent. But

suppose the initial pressure to have been 200 lbs. absolute, and that the steam is allowed to expand to thirty times its original volume. The heat expended in evaporating a pound of water at 32° into steam at 200 lbs. absolute pressure = 1,198.3 heat units, and the volume of steam so generated = 2.27 cu. ft. The average pressure during expansion would be 29.34 lbs. per square inch and the volume when expanded thirty times would equal $2.27 \times 30 = 68.1$ cu. ft.

One cubic foot of steam at 29.34 lbs. pressure equals $144 \times 29.34 = 4,224.96$ ft. lbs., and 68.1 cu. ft. will equal $4,224.96 \times 68.1 = 287,719.7$ ft. lbs. of energy, which divided by the equivalent, 778, equals 370.2 heat units, and the per cent of efficiency will be $\frac{370.2 \times 100}{1,198.3} = 30.8$ per cent.

Engine Efficiency. If the engine is considered merely as a machine for converting into useful work the heat energy in the steam regardless of the cost of fuel, its efficiency may be expressed as follows:

$$\frac{\text{Heat converted into useful work}}{\text{Total heat received in the steam}}$$

Example. Assume an engine to be receiving steam at 95 lbs. absolute pressure, that the consumption of dry steam per horse-power per hour equals 20 lbs., that the friction of the engine amounts to 15 per cent, and that the temperature of the feed water is raised from 60° to 170° by utilizing a portion of the exhaust.

In a pound of steam at 95 lbs. absolute there are 1,180.7 heat units, and in a pound of water at 170° there are 138.6 units of heat, but 28.01 of these heat units were in the water at its initial temperature of 60°. Therefore the total heat added to the water by the exhaust steam equals $138.6 - 28.01 = 110.59$ heat

units, and the total heat in each pound of steam to be charged up to the engine is 1,180.7 – 110.59 = 1,070.11, and the total for each horse-power developed per hour will be 1,070.11 × 20 = 21,402.2 heat units.

A horse-power equals 33,000 ft. lbs. per minute, or sixty times 33,000 = 1,980,000 ft. lbs. per hour. From this must be deducted 15 per cent for friction of the engine, leaving 1,683,000 ft. lbs. for useful work. Dividing this by the equivalent, viz., 778 ft. lbs., gives 2,163.2 heat units as the heat converted into one horse-power of work in one hour, and the percentage of efficiency of the engine will be $\frac{2,163.2 \times 100}{21,402.2} = 10.1$ per cent.

Efficiency of the Plant as a Whole includes boiler and engine efficiency and is to be figured upon the basis of

$$\frac{\text{Heat converted into useful work}}{\text{Calorific or heat value of fuel}}$$

Horse-Power Constant of an engine is found by multiplying the area of the piston in square inches by the speed of the piston in feet per minute and dividing the product by 33,000. It is the power the engine would develop with one pound mean effective pressure. To find the horse-power of the engine, multiply the M. E. P. of the diagram by this constant.

Logarithms. A series of numbers having a certain relation to the series of natural numbers, by means of which many arithmetical operations are made comparatively easy. The nature of the relation will be understood by considering two simple series, such as the following, one proceeding from unity in geometrical progression and the other from 0 in arithmetical progression

Geom. series, 1, 2, 4, 8, 16, 32, 64, 128, 256, 512, etc.

Arith. series, 0, 1, 2, 3, 4, 5, 6, 7, 8, 9, etc.

Here the ratio of the geometrical series is 2 and any term in the arithmetical series expresses how often 2 has been multiplied into 1 to produce the corresponding term of the geometrical series. Thus, in proceeding from 1 to 32 there have been 5 steps or multiplications by the ratio 2; in other words, the ratio of 32 to 1 is compounded 5 times of the ratio of 2 to 1. The above is the basic principle upon which common logarithms are computed.

Hyperbolic Logarithms. Used in figuring the M. E. P. of a diagram from the ratio of expansion and the initial pressure. Thus, hyperbolic logarithm of ratio of expansion + 1 multiplied by absolute initial pressure and divided by ratio of expansion = mean forward pressure. From this deduct total back pressure and the remainder will be mean effective pressure. The hyperbolic logarithm is found by multiplying the common logarithm by the constant 2.302585. Table 14 gives the hyperbolic logarithms of numbers usually required in calculations of the above nature.

Steam Consumption per Horse-Power per Hour. The weight in pounds of steam exhausted into the atmosphere or into the condenser in one hour divided by the horse-power developed. It is determined from the diagram by selecting a point in the expansion curve just previous to the opening of the exhaust valve and measuring the absolute pressure at that point. Then the piston displacement up to the point selected, plus the clearance space, expressed in cubic feet, will give the volume of steam in the cylinder, which multiplied by the weight per cubic foot of steam at the pressure as measured will give the weight of steam consumed during one stroke. From this should be deducted the

TABLE 14

HYPERBOLIC LOGARITHMS.

No.	Log.	No.	Log.	No.	Log.	No.	Log.	No.	Log.
1.01	0.0099	3.00	1.0986	5.00	1.6094	7.00	1.9459	9.00	2.1972
1.05	0.0487	3.05	1.1151	5.05	1.6194	7.05	1.9530	9.05	2.2028
1.10	0.0953	3.10	1.1341	5.10	1.6292	7.10	1.9600	9.10	2.2083
1.15	0.1397	3.15	1.1474	5.15	1.6390	7.15	1.9671	9.15	2.2137
1.20	0.1823	3.20	1.1631	5.20	1.6486	7.20	1.9740	9.20	2.2192
1.25	0.2231	3.25	1.1786	5.25	1.6582	7.25	1.9810	9.25	2.2246
1.30	0.2623	3.30	1.1939	5.30	1.6677	7.30	1.9879	9.30	2.2310
1.35	0.3001	3.35	1.2090	5.35	1.6771	7.35	1.9947	9.35	2.2354
1.40	0.3364	3.40	1.2238	5.40	1.6864	7.40	2.0015	9.40	2.2407
1.45	0.3715	3.45	1.2384	5.45	1.6956	7.45	2.0018	9.45	2.2460
1.50	0.4054	3.50	1.2527	5.50	1.7047	7.50	2.0149	9.50	2.2513
1.55	0.4382	3.55	1.2669	5.55	1.7138	7.55	2.0215	9.55	2.2565
1.60	0.4700	3.60	1.2809	5.60	1.7228	7.60	2.0281	9.60	2.2618
1.65	0.5007	3.65	1.2947	5.65	1.7316	7.65	2.0347	9.65	2.2670
1.70	0.5306	3.70	1.3083	5.70	1.7405	7.70	2.0412	9.70	2.2721
1.75	0.5596	3.75	1.3217	5.75	1.7491	7.75	2.0477	9.75	2.2773
1.80	0.5877	3.80	1.3350	5.80	1.7578	7.80	2.0541	9.80	2.2824
1.85	0.6151	3.85	1.3480	5.85	1.7664	7.85	2.0605	9.85	2.2875
1.90	0.6418	3.90	1.3610	5.90	1.7750	7.90	2.0668	9.90	2.2925
1.95	0.6678	3.95	1.3737	5.95	1.7834	7.95	2.0731	9.95	2.2976
2.00	0.6931	4.00	1.3863	6.00	1.7918	8.00	2.0794	10.00	2.3026
2.05	0.7178	4.05	1.3987	6.05	1.8000	8.05	2.0857	10.25	2.3273
2.10	0.7419	4.10	1.4010	6.10	1.8083	8.10	2.0918	10.50	2.3514
2.15	0.7654	4.15	1.4231	6.15	1.8164	8.15	2.0988	10.75	2.3749
2.20	0.7885	4.20	1.4351	6.20	1.8245	8.20	2.1041	11.00	2.3979
2.25	0.8110	4.25	1.4469	6.25	1.8326	8.25	2.1102	12.00	2.4849
2.30	0.8329	4.30	1.4586	6.30	1.8405	8.30	2.1162	13.00	2.5626
2.35	0.8544	4.35	1.4701	6.35	1.8484	8.35	2.1222	14.00	2.6390
2.40	0.8755	4.40	1.4816	6.40	1.8563	8.40	2.1282	15.00	2.7103
2.45	0.8961	4.45	1.4929	6.45	1.8640	8.45	2.1342	16.00	2.7751
2.50	0.9163	4.50	1.5040	6.50	1.8718	8.50	2.1400	17.00	2.8332
2.55	0.9361	4.55	1.5151	6.55	1.8795	8.55	2.1459	18.00	2.8903
2.60	0.9555	4.60	1.5260	6.60	1.8870	8.60	2.1518	19.00	2.9444
2.65	0.9746	4.65	1.5369	6.65	1.8946	8.65	2.1576	20.00	2.9957
2.70	0.9932	4.70	1.5475	6.70	1.9021	8.70	2.1633	21.00	3.0445
2.75	1.0116	4.75	1.5581	6.75	1.9095	8.75	2.1690	22.00	3.0910
2.80	1.0296	4.80	1.5686	6.80	1.9169	8.80	2.1747	23.00	3.0355
2.85	1.0473	4.85	1.5790	6.85	1.9242	8.85	2.1804	24.00	3.1780
2.90	1.0647	4.90	1.5892	6.90	1.9315	8.90	2.1860	25.00	3.2189
2.95	1.0818	4.95	1.5994	6.95	1.9387	8.95	2.1916	30.00	3.3782

steam saved by compression as shown by the diagram, in order to get a true measure of the economy of the engine. Having thus determined the weight of steam consumed for one stroke, multiply it by twice the number of strokes per minute and by 60, which will give the total weight consumed per hour. This divided by the horse-power will give the rate per horse-power per hour.

Cylinder Condensation and Reëvaporation. When the exhaust valve opens to permit the exit of the steam there is a perceptible cooling of the walls of the cylinder, especially in condensing engines when a high vacuum is maintained. This results in more or less condensation of the live steam admitted by the opening of the steam valve; but if the exhaust valve is caused to close at the proper time so as to retain a portion of the steam to be compressed by the piston on the return stroke, a considerable portion of the water caused by condensation will be reëvaporated into steam by the heat and consequent rise in pressure caused by compression.

Ordinates. Parallel lines drawn at equal distances apart across the face of the diagram, and perpendicular to the atmospheric line. They serve as a guide to facilitate the measurement of the average forward pressure throughout the stroke, or the pressure at any point of the stroke if desired.

Eccentric. A mechanical device used in place of a crank for converting rotary into reciprocating motion. An eccentric is in fact a form of crank in which the crank pin, corresponding to the eccentric sheave, embraces the shaft, but owing to the great leverage at which the friction between the sheave and the strap acts, compared with its short turning leverage, it ca-

only be used to advantage for the purpose named above.

Eccentric Throw is the distance from the center of the eccentric to the center of the shaft. This definition also applies to the term "radius of eccentricity."

Eccentric Position. The location of the highest point of the eccentric relative to the center of the crank pin, measured or expressed in degrees.

Angular Advance. The distance that the high point of the eccentric is set ahead of a line at right angles with the crank. In other words, the lap angle plus the lead angle. If a valve had neither lap nor lead, the position of the high point of the eccentric would be on a line at right angles with the crank; as, for instance, the crank being at 0° the eccentric would stand at 90°.

Valve Travel. The distance covered by the valve in its movement. It equals twice the throw of the eccentric.

Lap. The amount that the ends of the valve project over the edges of the ports when the valve is at mid-travel.

Outside or Steam Lap. The amount that the end of the valve overlaps or projects over the outside edge of the steam port.

Inside Lap. The lap of the inside or exhaust edge of the valve over the inside edge of the port.

Lead. The amount that the port is open when the crank is on the dead center. The object of giving a valve lead is to supply a cushion of live steam which, in conjunction with that already confined in the clearance space by compression, shall serve to bring the moving parts of the engine to rest quietly at the end

of the stroke, and also quicken the action of the piston in beginning the return stroke.

Compression. Closing of the exhaust passage before the steam is entirely exhausted from the cylinder. A certain quantity of steam is thus compressed into the clearance space.

Table 15, giving areas and circumferences of circles, is here inserted, for the reason that in the study of indicator diagrams there is very often occasion for reference to such a table.

In the following analysis of indicator diagrams all

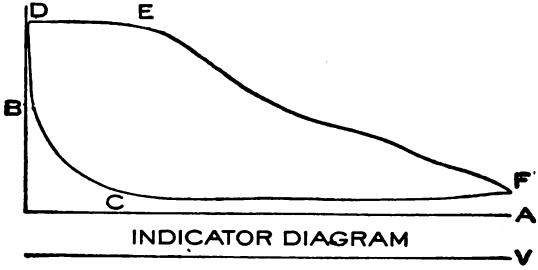

FIGURE 103

of the illustrations are reproductions of actual diagrams taken under ordinary working conditions.

Fig. 103 shows a sample diagram taken from a locomotive running at a speed of 29 miles per hour, and cutting off at 5½ inches. By reference to the letters, the different lines and points into which an indicator diagram is divided may be readily distinguished. The line V indicates the base line, or line of perfect vacuum, from which pressures are measured, especially in calculations of steam consumed per horse-power hour. This line is drawn at a point 14.7 lbs. below the atmospheric line A, as indicated by measurements

made with the scale adapted to the spring used in taking the diagram. The method of drawing the line of atmospheric pressure has already been described. It is from this line that the mean effective pressure of the steam upon the piston during the stroke is estimated in all calculations of diagrams taken from locomotives and other non-condensing engines.

Admission at the beginning of the stroke is shown at B, and from B to D is the admission line. From D to E is the steam line. E is the point of cut-off, and from E to F is the expansion curve. F is the point of release or exhaust opening, and from this point to C

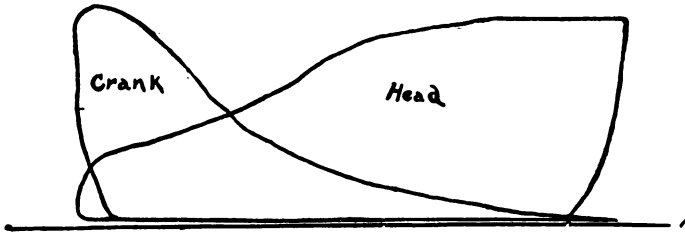

FIGURE 104

is the line of back pressure or counter pressure, and the amount of this pressure depends upon the height of this line above line A. Compression begins at C, and from this point to B is the compression curve.

Fig. 104 shows bad valve adjustment, the engine doing by far the largest portion of the work in the head end of the cylinder.

In order to illustrate the process of ascertaining the M. E. P. without dividing the diagram into ordinates, the following computation is given, together with rules, etc. In this process two important factors are necessary, viz., the absolute initial pressure and the absolute

TABLE 15

AREAS AND CIRCUMFERENCES OF CIRCLES.

Diam.	Area.	Circum.	Diam.	Area.	Circum.	Diam.	Area.	Circum.
.25	.049	.7854	15.5	188.692	48.694	31	754.769	97.389
.5	.1963	1.5708	16	201.062	50.265	31.25	766.992	98.175
1.0	.7854	3.1416	16.25	207.394	51.051	31.5	799.313	98.968
1.25	1.2271	3.9270	16.5	213.825	51.836	32	804.249	100.53
1.5	1.7671	4.7124	17	226.980	53.407	32.25	816.86	101.31
2	3.1416	6.2832	17.25	233.705	54.192	33	855.30	103.67
2.25	3.9760	7.0686	17.5	240.520	54.978	33.25	868.30	104.45
2.5	4.9087	7.8540	18	254.469	56.548	33.5	881.41	105.24
3	7.0686	9.4248	18.25	261.587	57.334	34	907.92	106.81
3.25	8.2957	10.210	18.5	268.803	58.119	34.25	921.32	107.60
3.5	9.6211	10.995	19	283.529	59.690	34.5	934.82	108.38
4	12.566	12.566	19.25	291.039	60.475	35	962.11	106.95
4.25	14.186	13.351	19.5	298.648	61.261	35.25	975.90	110.74
4.5	15.904	14.137	20	314.160	62.832	35.5	989.80	111.52
5	19.635	15.708	20.25	322.063	63.617	36	1017.8	113.09
5.25	21.647	16.493	20.5	330.064	64.402	36.25	1032.06	113.88
5.5	23.758	17.278	21	346.361	65.973	36.5	1046.35	114.66
6	28.274	18.849	21.25	354.657	66.759	37	1075.21	116.23
6.25	30.679	19.635	21.5	363.051	67.544	37.25	1089.79	117.01
6.5	33.183	20.420	22	380.133	69.115	37.5	1104.46	117.81
7	38.484	21.991	22.25	388.822	69.900	38	1134.11	119.38
7.25	41.282	22.776	22.5	397.608	70.686	38.25	1149.08	120.16
7.5	44.178	23.562	23	415.476	72.256	38.5	1164.15	120.95
8	50.265	25.132	23.25	424.557	73.042	39	1194.59	122.52
8.25	53.456	25.918	23.5	433.731	73.827	39.25	1209.95	123.30
8.5	56.745	26.703	24	452.390	75.398	39.5	1225.42	124.09
9	63.617	28.274	24.25	461.864	76.183	40	1256.64	125.66
9.25	67.200	29.059	24.5	471.436	76.969	40.25	1272.39	126.44
9.5	70.882	29.845	25	490.875	78.540	40.5	1288.25	127.23
10	78.540	31.416	25.25	500.741	79.325	41	1320.25	128.80
10.25	82.516	32.201	25.5	510.706	80.110	41.25	1336.40	129.59
10.5	86.590	32.986	26	530.930	81.681	41.5	1352.65	130.37
11	95.033	34.557	26.25	541.189	82.467	42	1385.44	131.94
11.25	99.402	35.343	26.5	551.547	83.252	42.25	1401.98	132.73
11.5	103.869	36.128	27	572.556	84.823	42.5	1418.62	133.51
12	113.097	37.699	27.25	583.208	85.608	43	1452.20	135.08
12.25	117.859	38.484	27.5	593.958	86.394	43.25	1469.13	135.87
12.5	122.718	39.270	28	615.753	87.964	43.5	1486.17	136.65
13	132.732	40.840	28.25	626.798	88.750	44	1520.53	138.23
13.25	137.886	41.626	28.5	637.941	89.535	44.25	1537.86	139.01
13.5	143.130	42.411	29	660.521	91.106	44.5	1555.28	139.80
14	153.938	43.982	29.25	671.958	91.891	45	1590.43	141.37
14.25	159.485	44.767	29.5	683.494	92.677	45.25	1608.15	142.15
14.5	165.130	45.553	30	706.860	94.248	45.5	1625.97	142.94
15	176.715	47.124	30.25	718.690	95.033	46	1661.90	144.51
15.25	182.654	47.909	30.5	730.618	95.818	46.25	1680.01	145.29

TABLE 15—*Continued*

Diam.	Area.	Circum.	Diam.	Area.	Circum.	Diam.	Area.	Circum.
46.5	1698.23	146.08	62.25	3043.47	195.56	78	4778.37	245.04
47	1734.94	147.65	62.5	3067.96	196.35	78.25	4809.05	245.83
47.25	1753.45	148.44	63	3117.25	197.92	78.5	4839.83	246.62
47.5	1772.05	149.22	63.25	3142.04	198.71	79	4901.68	248.19
48	1809.56	150.79	63.5	3166.92	199.50	79.25	4932.75	248.97
48.25	1828.46	151.58	64	3216.99	201.06	79.5	4963.92	249.76
48.5	1847.45	152.36	64.25	3242.17	201.85	80	5026.56	251.33
49	1885.74	153.93	64.5	3267.46	202.68	80.5	5089.58	252.90
49.25	1905.03	154.72	65	3318.31	204.20	81	5153.00	254.47
49.5	1924.42	155.50	65.25	3343.88	204.99	81.5	5216.82	256.04
50	1963.50	157.08	65.5	3369.56	205.77	82	5281.02	257.61
50.25	1983.18	157.86	66	3421.20	207.34	82.5	5345.62	259.18
50.5	2002.96	158.65	66.25	3447.16	208.13	83	5410.62	260.75
51	2042.82	160.22	66.5	3473.23	208.91	83.5	5476.00	262.32
51.25	2062.90	161.00	67	3525.66	210.49	84	5541.78	263.89
51.5	2083.07	161.79	67.25	3552.01	211.27	84.5	5607.95	265.46
52	2123.72	163.36	67.5	3578.47	212.06	85	5674.51	267.04
52.25	2144.19	164.14	68	3631.68	213.63	85.5	5741.47	268.60
52.5	2164.75	164.19	68.25	3658.44	214.41	86	5808.81	270.17
53	2206.18	166.50	68.5	3685.29	215.20	86.5	5876.55	271.75
53.25	2227.05	167.29	69	3739.28	216.77	87	5944.66	273.32
53.5	2248.01	168.07	69.25	3766.43	217.55	87.5	6013.21	274.89
54	2290.22	169.64	69.5	3793.67	218.34	88	6082.13	276.46
54.25	2311.48	170.43	70	3848.46	219.91	88.5	6151.44	278.03
54.5	2332.83	171.21	70.25	3875.99	220.70	89	6221.15	279.60
55	2375.83	172.78	70.5	3903.63	221.48	89.5	6291.25	281.17
55.25	2397.48	173.57	71	3959.20	223.05	90	6371.64	282.74
55.5	2419.22	174.35	71.25	3987.13	223.84	90.5	6432.62	284.31
56	2463.01	175.92	71.5	4015.16	224.62	91	6503.89	285.88
56.25	2485.05	176.71	72	4071.51	226.19	91.5	6573.56	287.46
56.5	2507.19	177.5	72.25	4099.83	226.98	92	6647.62	289.03
57	2551.76	179.07	72.5	4128.25	227.75	92.5	6720.07	290.60
57.25	2574.19	179.85	73	4185.39	229.34	93	6792.92	292.17
57.5	2596.72	180.64	73.25	4214.11	230.12	93.5	6866.16	293.74
58	2642.08	182.21	73.5	4242.92	230.91	94	6939.79	295.31
58.25	2664.91	182.99	74	4300.85	232.48	94.5	7013.81	296.88
58.5	2687.83	183.78	74.25	4329.95	233.26	95	7088.23	298.45
59	2733.97	185.35	74.5	4359.16	234.05	95.5	7163.04	300.02
59.25	2757.19	186.14	75	4417.87	235.62	96	7238.25	301.59
59.5	2780.51	186.92	75.25	4447.37	236.40	96.5	7313.80	303.16
60	2827.44	188.49	75.5	4476.97	237.19	97	7389.81	304.73
60.25	2851.05	189.28	76	4536.37	238.76	97.5	7466.22	306.30
60.5	2874.76	190.06	76.25	4566.36	239.55	98	7542.89	307.88
61	2922.47	191.64	76.5	4596.35	240.33	98.5	7620.09	309.44
61.25	2946.47	192.42	77	4656.63	241.90	99	7697.70	311.02
61.5	2970.57	193.21	77 25	4686.92	242.69	99.5	7775.63	312.58
62	3019.07	194.78	77.5	4717.30	243.47	100	7854.00	314.16

terminal pressure, and they can both be obtained from the diagram by measuring with the scale adapted to the spring used. Thus, in Fig. 105 the absolute initial pressure measured from the line of perfect vacuum V to line B is 77 lbs., and the absolute terminal pressure measured from V to line B′ is 21 lbs. The ratio, or number of expansions, is found thus:

Rule. Divide the absolute initial pressure by the absolute terminal pressure; thus, 77 ÷ 21 = 3.65 = number of expansions.

Second. Find mean forward pressure.

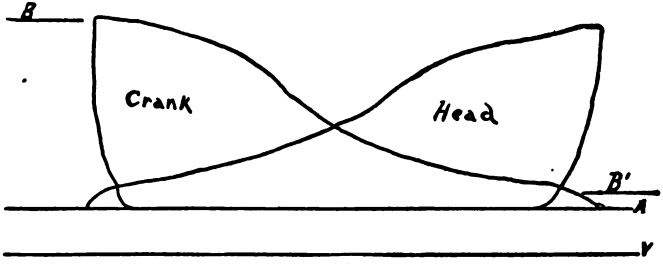

FIGURE 105

Rule. Multiply absolute initial pressure by the hyperbolic logarithm of number of expansions plus 1, and divide product by number of expansions. Thus, referring to Table 14, it will be seen that the hyperbolic logarithm of 3.65 is 1.2947, to which 1 must be added. Then $\frac{77 \times 2.2947}{3.65} = 48.4$ lbs., which is the absolute mean forward pressure. From this deduct the absolute back pressure, which is 16 lbs. or 1 lb. above atmosphere; thus, 48.4 − 16 = 32.4 lbs. M. E. P.

Third. Find I. H. P.

Area of piston minus one-half area of rod ×

M. E. P. × piston speed in feet per minute, divided by 33,000. Thus (the diameter of rod being 3 in.),

$$\frac{250.96 \times 32.4 \times 564}{33{,}000} = 138.9 \text{ I. H. P.}$$

The steam consumption per I. H. P. per hour may also be computed by means of Table 16, which was originally calculated by Mr. Thomson, and is based upon the following theory:

TABLE 16

T. P.	W.	T. P.	W.	T. P.	W.
3	117.30	13	466.57	23	798.10
3.5	135.75	13.5	483.43	23.5	814.39
4	153.88	14	500.22	24	830.64
4.5	171.94	14.5	517.07	24.5	846.96
5	186.75	15	533.85	25	863.25
5.5	207.60	15.5	550.64	25.5	879.49
6	225.24	16	567.36	26	895.70
6.5	242.97	16.5	584.10	26.5	911.86
7	260.54	17	600.78	27	927.99
7.5	278.06	17.5	617.40	27.5	944.07
8	295.44	18	633.96	28	960.12
8.5	312.80	18.5	650.46	28.5	976.27
9	330.03	19	666.90	29	992.38
9.5	347.27	19.5	683.38	29.5	1008.46
10	364.40	20	699.80	30	1024.50
10.5	381.57	20.5	716.27	30.5	1040.51
11	398.64	21	732.69	31	1056.48
11.5	415.73	21.5	749.06	31.5	1072.42
12	432.72	22	765.38	32	1088.32
12.5	449.69	22.5	781.76	32.5	1104.35

A horse-power = 33,000 ft. lbs. per minute, or 1,980,000 ft. lbs. per hour, or 1,980,000 × 12 = 23,760,000 in. lbs. per hour, meaning that the same amount of energy required to lift 33,000 lbs. one foot high in one minute of time would lift 23,760,000 lbs. one inch high in one minute of time. Now, if an engine were driven by a fluid that weighed one pound per cubic

inch, and the mean effective pressure of this fluid upon the piston was one pound per square inch, it would require 23,760,000 lbs. of the fluid per horse-power per hour. But, if in place of the heavier fluid we substitute pure distilled water, of which it requires 27.648 cu. in. to weigh one pound, the consumption per I. H. P. per hour will be considerably less; as, for instance, 23,760,000 ÷ 27.648 = 859,375 lbs., which would be the rate per hour of the water driven engine if the M. E. P. of the water was one pound per square inch and if the M. E. P. was increased to 20 lbs., then twenty times more power would be developed with the same volume of water, but the weight of water consumed per H. P. per hour would be proportionately less. Now, if the engine is driven by steam it will consume just as much less water in proportion as the water required to make the steam is less in volume than the steam used. Therefore if the above constant number, 859,375, be divided by the M. E. P. of any diagram and by the volume of the terminal pressure, the quotient will be the water (or steam) consumption per I. H. P. per hour.

Referring to Table 16, tne numbers in the W columns are the quotients obtained by dividing the constant, 859,375, by the volumes of the absolute pressures given in the columns under T. P. and which represent terminal pressures. The table is considerably abridged from the original, which was very full and complete, the pressures advancing by tenths of a pound from 3 lbs. to 60 lbs.; but it is seldom that in ordinary practice there is needed such accuracy. If at any time, however, a diagram should show a terminal pressure not given in the table, the correct factor for that pressure can be easily found by dividing the constant

859,375 by the relative volume of the pressure as found in Table 4 of the properties of saturated steam given in another chapter.

Referring again to Fig. 105, it is seen that the terminal pressure is 21 lbs. absolute, and by reference to Table 16 and glancing down column T. P. until 21 is reached, it will be seen that the number opposite in column W is 732.69. This number divided by the M. E. P. of the diagram Fig. 105, which is 32.4 lbs., gives 22.6 lbs. per I. H. P. per hour as the steam consumption. The rate thus found makes no allowance for clearance and compression, however, and these two very important items will be treated in a succeeding chapter, together with the method of correction for the above, viz., clearance and compression, as they enter largely into the steam economy of an engine.

Steam Consumption from Indicator Diagrams. In calculating the steam consumption of an engine, two very important factors must not be lost sight of, viz., clearance and compression. Especially is this the case in regard to clearance when there is little or no compression, for the reason that the steam required to fill the clearance space at each stroke of the engine is practically wasted, and all of it passes into the atmosphere or the condenser, as the case may be, without having done any useful work except to merely fill the space devoted to clearance. On the other hand, if the exhaust valve is closed before the piston completes the return stroke, the steam then remaining in the cylinder will be compressed into the clearance space and can be deducted from the total volume, which, without compression, would have been exhausted at the terminal pressure.

Figs. 106 and 107, which are reproductions of dia-

grams taken by the author while adjusting the valves on a 16 × 42 in. corliss engine, will serve to graphically illustrate this point. Fig. 106, which was the first one to be taken, shows no compression. The point of admission at A is plainly defined by the square corner at the extreme end of the stroke. The clearance of this engine is 4 per cent of the volume of the piston displacement. The engine being 16 in. bore by 42 in. stroke, the piston displacement is found by the following calculation: Area of piston, 201.06 sq. in. × stroke, 42 in. = 8444.52 cu. in. The volume of clearance space

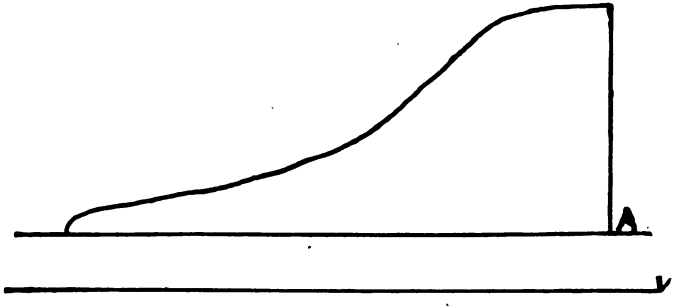

FIGURE 106

is equal to 8444.52 cu. in. × .04 = 337.78 cu. in., which divided by 1,728 = .195 cu. ft.

By reference to Fig. 107, taken after adjusting the valves for compression, it will be noticed that the steam is there compressed to 37 lbs., the compression curve beginning at C and ending at B. There is therefore compressed during each stroke a volume of steam equal to .195 cu. ft. at a pressure of 37 lbs. gauge, or 52 lbs. absolute.

One cubic foot of steam at 52 lbs. absolute pressure weighs .1243 lbs., and .195 cu. ft. will weigh .1243 × .195 = .0242 lbs.

The engine was running at 70 R. P. M., or 140 strokes per minute. Thus, according to Fig. 107, the total weight of steam compressed and doing useful work during one hour, and which without compression would have passed out through the exhaust pipe, is equal to .0242 × 140 × 60 = 203.28 lbs.

Now, in order to estimate the steam consumption of the above engine from diagram Fig. 106, it would be necessary to account for all the steam occupying not only the volume of the piston displacement at the end of the stroke, but the clearance as well, for the reason,

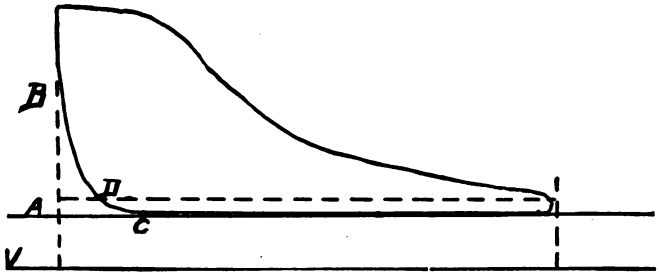

FIGURE 107

as before stated, that it would all be released before exhaust closure. This would equal 8444.52 cu. in. + 337.78 cu. in. = 8782.3 cu. in., which divided by 1,728 = 5.08 cu. ft. each stroke, or 10.16 cu. ft. each revolution.

The absolute terminal pressure of Fig. 106 is 20 lbs. One cubic foot of steam at this pressure weighs .0507 lbs., and the weight of steam consumed each revolution would therefore be 10.16 × .0507 = .515 lbs., which multiplied by 70 R. P. M. = 36.05 lbs. per minute, or 2,163 lbs. per hour. The horse-power developed by the engine at the time was 80. Therefore the steam consumption per I. H. P. per hour = 2,163 ÷ 80 = 27 lbs.

Referring again to Fig. 107, it will be remembered that the total weight of steam compressed during one hour was 203.28 lbs. The weight of steam consumed per hour, therefore, equals $2{,}163 - 203.28 = 1959.7$ lbs.

Owing to compression, the work area of Fig. 107 is somewhat smaller than that of Fig. 106, amounting in fact to the area of the irregular figure enclosed between the points A, B and C. The work represented by this figure amounts to a very small proportion of the total work indicated by Fig. 106, still, in order to arrive at correct conclusions, it should be deducted therefrom.

Assuming the negative work to be equal to .55 horsepower, we have $80 - .55 = 79.45$ I. H. P. as the work represented by Fig. 107. As the total weight of steam consumed in one hour was 1959.7 lbs., the steam consumption per I. H. P. per hour will be $1959.7 \div 79.45 = 24.67$ lbs., a saving by compression of 2.33 lbs. per H. P. per hour, besides the great advantage of having a cushion of steam in contact with the piston at the termination of the stroke, thus bringing the moving parts of the engine to rest quietly without shock or jar.

The steam consumption may also be computed from the diagram, regardless of the dimensions of the cylinder or the horse-power developed. The mean effective pressure and also the absolute terminal pressure must, however, be known. This method has been referred to, but in the computation therein made, no correction was made for clearance and compression.

Having reviewed these two factors at considerable length, it will now be in order to more fully explain the methods of treating diagrams when it is desired to make these corrections.

First, draw vertical lines C and D, Fig. 108, at each end of the diagram, and perpendicular to the atmospheric line. Draw line V, representing perfect vacuum, 14.7 lbs. below the atmospheric line, as indicated on the scale adapted to the diagram, which in this case is 50 lbs. to the inch. Continue the expansion from R, where release begins, until it intersects line D V, from which point the absolute terminal pressure can be measured.

Having ascertained the terminal pressure, which for Fig. 108 is 30 lbs., draw line D E, which may be called

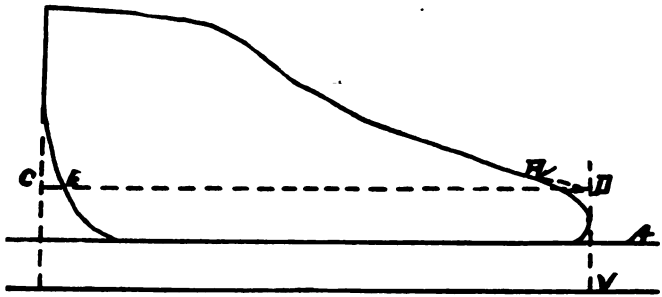

FIGURE 108

the consumption line for 30 lbs. The terminal being 30 lbs., refer to Table 16 and find in column W, opposite 30 in column T. P., the number 1,024.5. Divide this number by the M. E. P., which in Fig. 108 is 41 lbs., and the quotient, which is 24.99 lbs., is the uncorrected rate of steam consumption. This rate stands for the total consumption throughout the whole stroke represented on the diagram by the distance from D to C, which measures 3.25 in., but it is evident that there is a small portion of the return stroke, that indicated by the distance from E to C, during which the steam

compressed in the clearance space should not be charged to the consumption rate, but should be deducted therefrom. In order to do this, multiply the uncorrected rate by the distance from D to E, which is 3⅛ in., or 3.125 in., and divide the product by the distance from D to C, 3¼ in., or 3.25 in. Thus, $24.99 \times 3.125 \div 3.25 = 24.03$ lbs., which is the corrected rate and represents a saving by compression of $24.99 - 24.03 = .96$ lbs., or nearly 3.7 per cent.

In many cases the terminal pressure greatly exceeds the compression, an illustration of which is given in Fig. 109. It now becomes necessary to extend the

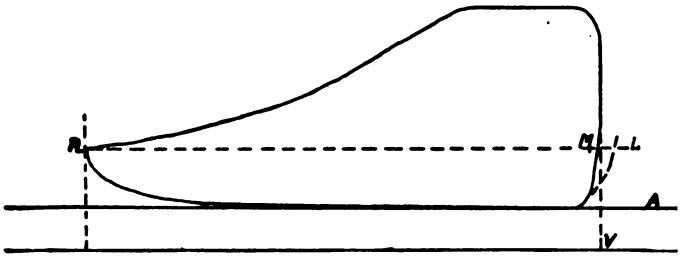

FIGURE 109

compression curve to L, a point equidistant from the vacuum line with the terminal at R. The consumption line R. L. now becomes longer than the stroke line R. M.; therefore the corrected rate will exceed the uncorrected rate by just so much; as, for instance, terminal pressure = 34 lbs. The factor, as per Table 16, = 1152.26, and the M. E. P. of the diagram is 47 lbs. Then, $1,152.26 \div 47 = 24.5$ lbs., uncorrected rate; 24.5×3.125 in. (distance R. L.) $\div 3$ in. (distance R. M.) = 25.52 lbs., corrected rate, a loss of a little more than one pound, or about 4 per cent.

There is another class of diagrams very frequently encountered, in which the terminal pressure is considerably below the compression curve, and in order to compute the consumption rate by the above method it becomes necessary to continue the compression curve downwards until it meets the terminal, as illustrated at A, Fig. 110. R is the point of release, D A represents the consumption line, and D C the stroke. The terminal is 8.5 lbs., and the factor for that pressure, according to Table 16, is 312.8. Dividing this number

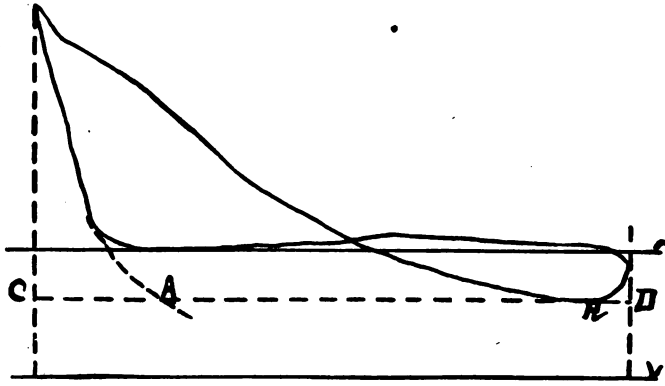

FIGURE 110

by the M. E. P., which was 7 lbs., gives 44.6 lbs. as the uncorrected rate. The distance D to A, where the compression curve intersects the consumption line, is 2.625 in., and the total length of the diagram C to D is 3.375 in. Then $44.6 \times 2.625 \div 3.375 = 35$ lbs. as the corrected rate.

Theoretical Clearance. The expansion and compression curves of a diagram are created by the expansion and compression of all the steam admitted during the stroke. This includes the steam in the clearance

space as well as in the cylinder proper. It is evident, therefore, that the volume of the clearance is one of the factors controlling the form of these curves, and when the clearance is known a correct expansion or isothermal curve may be theoretically constructed, as will be explained later on. Also, if the actual curves, either expansion or compression, of a diagram assume an approximately correct form, the clearance, if not already known, may be determined theoretically from them; although too much confidence should not be put

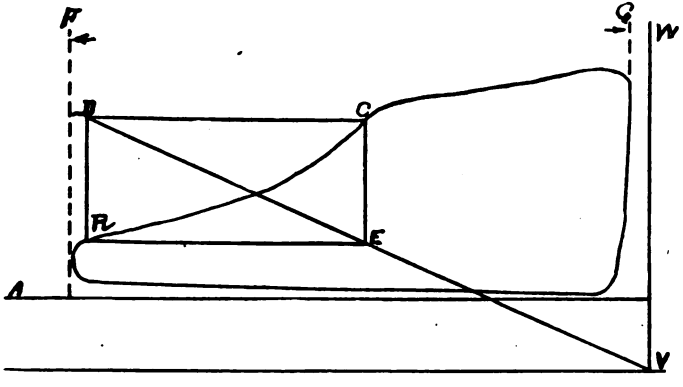

FIGURE 111

in the results, as they are liable to show either too little or too much clearance, generally the latter, especially if figured from the compression curve.

For the benefit of those who may desire to test this method of ascertaining the percentage of clearance of their engines, several illustrations will be given of its application to actual diagrams taken from engines in which the clearance was known.

Fig. 111 is from an engine in which the clearance was known to be 5 per cent. As compression cuts but

a very small figure in this diagram, the expansion curve alone will be utilized for obtaining the theoretical clearance, and the process is as follows:

Select two points, C and R, in the curve as far apart as possible, but be sure that they are each within the limits of the true curve. Thus C is located just after cut-off takes place, and R is at a point just before release begins. From C draw line C D parallel with the atmospheric line. From D draw line D R, and from C draw line C E, both perpendicular to the atmospheric line. Then from R draw line R E, forming a rectangular parallelogram, C D R E, with two opposite corners, C and R, within the curve. Now through the other two corners, D and E, draw the diagonal D E, extending it downwards until it intersects the vacuum line V. From this point erect the vertical line V W, which is the theoretical clearance line.

To prove the result, proceed as follows: Measure the length of diagram from F to G, which in this case is 3.75 in., representing piston displacement. Next measure the distance from F to the clearance line V W, which is 3.91 in., representing piston displacement with volume of clearance added. Then $3.91 - 3.75 = .16$, which represents volume of clearance; and $.16 \times 100 \div 3.75 = 4.3$ per cent, which is approximately near the actual clearance, which, as before stated, was 5 per cent.

The Theoretical Expansion Curve. According to Boyle's law the volume of all elastic gases is inversely as their pressures, and steam, being a gas, conforms substantially to this law; although the expansion curves of indicator diagrams are affected more or less by the loss of heat transmitted through the cylinder

walls, and by the change in the temperature of the steam produced by the changes in pressure during the progress of the stroke. The pressure generally falls more rapidly during the first part of the stroke, and less rapidly during the last portion than it should in order to conform strictly to the above law, and the terminal pressure usually is greater than it should be to agree with the ratio of expansion. But this fullness of the expansion curve of the diagram near the end compensates in a measure for the too rapid fall near

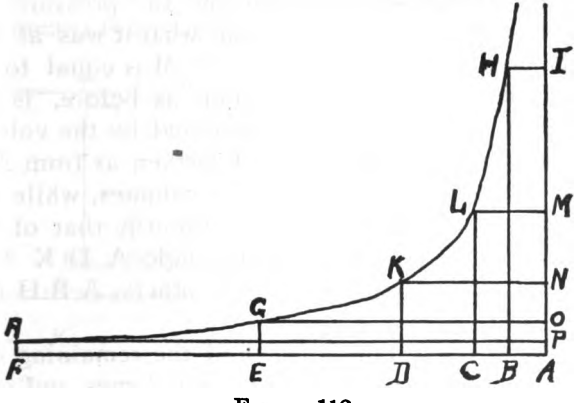

FIGURE 112

the beginning of the stroke. Therefore, if the engine is in fairly good condition, with the valves properly adjusted and not leaking, and the piston rings are steam-tight, it may be assumed that the expansion of the steam in the cylinder takes place according to Boyle's law, and it is found that the expansion curve drawn by the indicator practically coincides with a hyperbolic curve constructed according to that law.

Fig. 112 graphically illustrates the application of the hyperbolic law to the expansion of gases. The hori-

zontal lines represent volumes and the vertical lines represent pressures. The base line, A F, represents the full stroke of a piston in the cylinder of an engine, and the vertical line A I represents the pressure of the steam at the commencement of the stroke.

Suppose there is no clearance and that the steam has been admitted up to point H when it is cut off. The rectangle A B H I is the product of the pressure multiplied by the volume of the steam thus admitted. When the piston has traveled from A to C the volume of the steam has been doubled and the pressure C L has been reduced to just one-half what it was at A I, but the area of the rectangle A C L M is equal to the area of the initial rectangle, and, as before, is the product of the pressure C L multiplied by the volume A C. As the piston travels still farther, as from A to D, the steam is expanded to four volumes, while the pressure at D K will only be one-fourth that of the initial pressure; but the new rectangle A D K N is still equal in area to either of the others, A B H I or A C L M.

The same law applies to each of the remaining rectangles; A E G O representing five volumes and one-fifth of the initial pressure, and A F R P representing six times the initial volume and one-sixth of the initial pressure, but each having the same area as the initial rectangle A B H I. Now, the area of the rectangle A B H I represents the work done by the steam up to the point of cut-off, and the area of the hyperbolic figure enclosed by the lines B H R F represents the work done by the expansion of the steam after cut-off occurs. This area and the amount of work it represents may be computed by means of the known relations of hyperbolic surfaces with their base lines; as,

for instance, if the base lines A B, A C, A D, etc., extend in geometrical ratio, as 1, 2, 4, 8, 16, etc., the successive areas, B H L C, B H K D, B H G E, etc., increase in arithmetical ratio, as 1, 2, 3, 4, etc.

On the principles of common logarithms, which represent in arithmetical ratio natural numbers in geometrical ratio, tables of hyperbolic logarithms have been computed for the purpose of facilitating the calculation of areas of work due to different degrees of expansion. Such a table is given elsewhere in this book, and the method of calculating the M. E. P. by this means is described

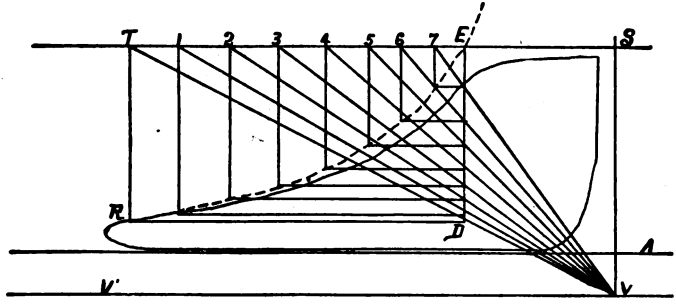

FIGURE 113

A theoretical curve may be constructed conjointly with the actual expansion curve of a diagram by first locating the clearance and vacuum lines and then pursuing the method illustrated by Fig. 113. A curve so produced is called an isothermal curve, meaning a curve of the same temperature.

Referring to Fig. 113, suppose, first, that it is desired to ascertain how near the expansion curve of the diagram coincides with the isothermal curve, at or near the point of cut-off. Select point R near where release begins, but still well within the expansion

curve. From this point draw the vertical line, R T, parallel with the clearance line, V S. Then draw the horizontal line, S T, parallel with the atmospheric line, and at such a height above it as will equal the boiler pressure as measured by the scale adapted to the diagram; such measurement to be made from the atmospheric line to correspond with the gauge pressure. From T draw the diagonal T V, and from R draw the horizontal line R D parallel with the atmospheric line. From D, where this line intersects T V, erect the perpendicular D E, thus forming the parallelogram R D E T, and as line T V passes through two of its opposite angles and meets the junction of the clearance and vacuum lines, the other two angles, R and E, will be in the theoretical curve, and R being the starting point, it is obvious that this curve must pass through E, which would be the theoretical point of cut-off on the steam line S T.

Two important points in the theoretical curve have now been located, viz., E as the cut-off, and R as the point of release. In order to obtain intermediate points, draw any desired number of lines downward from points in S T, as 1, 2, 3, 4, 5, etc., and continue them downwards far enough to be sure that they will meet the intended curve, and from the same points in S T draw diagonals 1 V, 2 V, 3 V, 4 V, 5 V, etc., all to converge accurately at V. From the intersection of these diagonals with D E draw horizontal lines parallel with V V', and the points of junction of these lines with the vertical lines will be points in the theoretical curve. It will now be an easy matter to trace the curve through these points. If, on the other hand, it be desired to compare the curves toward the exhaust end of the diagram, draw lines E D and E T, Fig. 114,

also T R, locating R near where release commences, after which draw line R D, completing the parallelogram E T R D, fixing R as a point in the theoretical curve started at E. After drawing the diagonal T V, proceed in the same manner as before to locate the intermediate points.

It will be observed that in order to ascertain the performance of the steam near the beginning of the stroke, the starting point of the isothermal curve must be near the point of release, and conversely, if the starting point of the curve is located near the point of

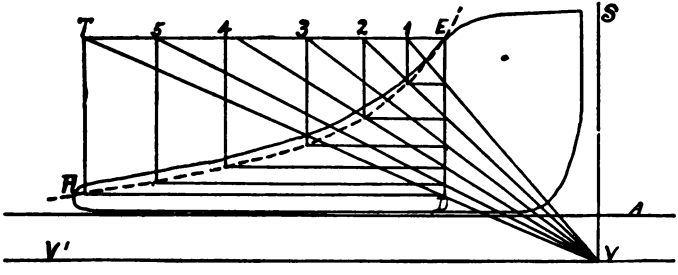

FIGURE 114

cut-off and coincident with the actual curve, the test will apply towards the end of the stroke. It is not to be expected that the expansion curve of any diagram taken in practice will conform strictly to the lines of the isothermal curve, especially towards the latter end of the stroke, owing to the reëvaporation of water resulting from the condensation of steam which was retained in the cylinder by the closing of the exhaust valve. This reëvaporation commences just as soon as the temperature of the steam owing to reduction of pressure due to expansion, falls below the temperature of the cylinder walls, and it continues at an increasing

rate until release occurs. The tendency of this reëvaporation or generation of steam within the cylinder during the latter portion of the stroke is to raise the terminal pressure considerably above what it would be if true isothermal expansion took place. The terminal pressure may also be augmented by a leaky steam valve, while, on the other hand, a leaky piston would cause a lowering of the terminal and an increase in the back pressure.

The Adiabatic Curve. If it were possible to so protect or insulate the cylinder of a steam engine that there would be absolutely no transmission of heat either to or from the steam during expansion, a true adiabatic curve or "curve of no transmission" might be obtained. The closer the actual expansion curve of a diagram conforms to such a curve, the higher will be the efficiency of the engine as a machine for converting heat into work.

Fig. 115 illustrates a method of figuring a curve which, while not strictly adiabatic, will be near enough for all practical purposes, while at the same time it will give the student an opportunity to study the laws governing the expansion of saturated steam.

To draw the curve, first locate the clearance and vacuum lines V S and V V'. Next locate point R in the expansion curve near where release begins, making this the starting point, and also the point of coincidence of the expansion curve with the adiabatic curve.

The other points in the curve are located from the volumes of steam at different pressures during expansion; the pressures being measured from the line of perfect vacuum, and the volumes from the clearance line.

The absolute pressure at R, Fig. 115, is 26 lbs.

From point R erect the perpendicular R T. Also draw horizontal line R 26 parallel with the vacuum line and at a height equal to 26 lbs. above vacuum line V V', as shown by the scale, which in this case was 40. The length of line R 26, measured from R to the clearance line, is $3\frac{1}{16}$ in., or 3.0625 in. By reference to Table 4 it will be seen that the volume of steam at 26 lbs. absolute, as compared with water at 39°, is 962. Now, if the length of line R 26 be divided by this volume, and the quotient multiplied by each of the volumes of the other pressures represented at points 30, 35, 40,

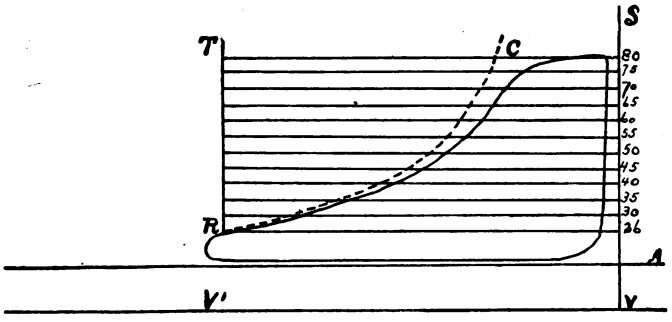

FIGURE 115

45, etc., up to the initial pressure, the products will be the respective distances from the clearance line of points in the adiabatic curve. These points can be marked on the horizontal lines drawn from the clearance line to line R T.

Starting with line R 26, it has been noted that its length is 3.0625 in., and that the volume was 962. 3.0625 ÷ 962 = .003. Then the volume of steam at 30 lbs. is 841, which being multiplied by .003 = 2.5 in., the length of line 30. Next, the volume at 35 lbs. = 728.

Multiplying this volume by .003 = 2.1 in., length of line 35, and so in like manner for each of the other points.

The process involves considerable figuring and careful and accurate measurements, which should be made with a steel rule with decimal graduations. It is not expected that the cut Fig. 115 will be found accurate enough in its measurements to serve as a standard; it being intended only to serve as an illustration of the process. The diagram from which the illustration was drawn was taken from a 600 H. P. engine situated some 200 ft. from the boilers, and there was a considerable cooling of the steam by the time it reached the engine, the effect of which is apparent. The curve produced by the measurements is shown by the broken line. The process can be applied to any diagram.

Power Calculations. The area of the piston (minus one-half the area of rod) multiplied by the M. E. P., as shown by the diagram, and this product multiplied by the number of feet traveled by the piston per minute (piston speed), will give the number of foot-pounds of work done by the engine each minute, and if this product be divided by 33,000, the quotient will be the indicated horse-power (I. H. P.) developed by the engine.

Therefore one of the first requisites in power calculations is to ascertain the M. E. P. Beginning with the most simple, though only approximately correct, method of obtaining the average pressure, as illustrated by Fig. 116, draw line A B touching at A and cutting the diagram in such manner that the space D above it will equal in area spaces C and E taken together, as nearly as can be estimated by the eye.

Then with the scale measure the pressure along the line F G at the middle of the diagram, which will be the M. E. P

The process is based upon the theory that the average width of any tapering figure is its width at the middle of its length. This method should not be relied upon as accurate, but is convenient at times when it is desired to make a rough estimate of the horse-power of an engine.

Figuring the M. E. P. by Ordinates. This is a very common method and one which can be relied upon to

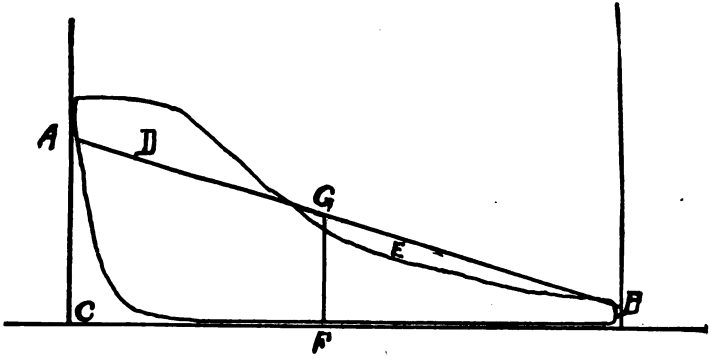

FIGURE 116

give accurate results, provided care is exercised in its use.

The process consists in drawing any convenient number of vertical lines perpendicular to the atmospheric line across the face of the diagram, spacing them equally, with the exception of the two end spaces, which should be one-half the width of the others, for the reason that the ordinates stand for the centers of equal spaces, as, for instance, line 1, Fig. 117, stands for that portion of the diagram from the end to the

middle of the space between it and line 2. Again, line 2 stands for the remaining half of the second space and the first half of the third, and so on. This is an important matter, and should be thoroughly understood, because if the spaces are all made of equal width, and measurements are taken on the ordinates, the results will be incorrect, especially in the case of high initial pressure and early cut-off, following which the steam undergoes great changes.

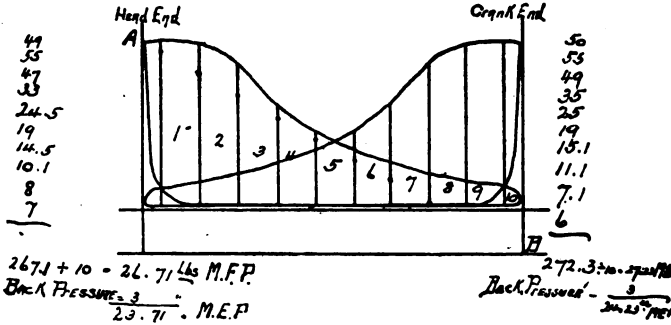

FIGURE 117

If the spaces are all made equal, the measurements will require to be taken in the middle of them, and errors are liable to occur, whereas, if spaced as before described, the measurements can be made on the ordinates, which is much more convenient and will insure correct results. Any number of ordinates can be drawn, but ten is the most convenient and is amply sufficient, except in case the diagram is excessively long. For spacing the ordinates, dividers may be used, or a parallel ruler may be procured from the makers of the indicator; but one of the most con-

venient and easily procurable instruments for this purpose is a common two-foot rule, and the method of using it is illustrated in Fig. 117.

First draw vertical lines at each end of the diagram, perpendicular to the atmospheric line and extending downwards to the vacuum line, or below it, if necessary, in order to have a point on which to lay the rule. In Fig. 117, points A and B are found to be the most convenient. Now lay the rule diagonally across the diagram, touching at A and B, and the distance will be found to be 3¾ in., or 60 sixteenths.

Suppose it be desired to draw 10 ordinates. Divide 60 by 10, which will give 6 sixteenths, or ⅜ in., as the width of the spaces, but as the two end spaces are to be one-half the width of the others, there will be 11 spaces altogether, the two outer ones having a width equal to one-half of ⅜, or $\frac{3}{16}$. Now apply the rule again in the same manner, touching at points A and B, and with a sharp pointed pencil begin at A and mark the location of the first ordinate according to the rule, at a distance of $\frac{3}{16}$ from the end. Then ⅜ from this mark make another one, which will locate the second ordinate, and proceed in like manner to locate the others. The last two or three marks generally come below the diagram, and if the diagram be taken from a condensing engine it may be necessary to tack it on to a larger sheet of paper in order to get these points. Having correctly located the ordinates, they may now be drawn perpendicular to the atmospheric line or vacuum line, either of which will answer.

It should be noted that, owing to the diagonal position of the rule with relation to the atmospheric line, the spaces are not of the actual width as described by the rule, but this is unimportant, so long as they are of

a uniform width. This method can be applied to any diagram, no matter what its length may be, and point B may be located at any distance below the atmospheric or vacuum lines, wherever it is the most convenient for the subdivisions on the rule, sixteenths, eighths, etc., so long as it is in line with the end of the diagram. Having thus drawn the ordinates, the M. E. P. may be found by measuring the pressure expressed by each one, using for this purpose the scale adapted to the spring used, adding all together and dividing by the number of ordinates which will give the average pressure.

Referring to Fig. 117, begin with ordinate No. 1 on the diagram, from the head end of the cylinder. In this case a 40 spring was used. Lay the scale on the ordinate with the zero mark where it intersects the compression curve. The pressure is seen to be 49 lbs. Set this down at that end of the card and measure the pressure along ordinate No. 2, which is 55 lbs. Proceed in this manner to measure all the ordinates, placing the resulting figures in a column, after which add them together and divide by 10. The result is 26 71 lbs., which is the mean forward pressure (M. F. P.). To obtain the mean effective pressure, deduct the back pressure, which is represented by the distance of the exhaust line of the diagram above the atmospheric line in a non-condensing engine, and in a condensing engine the back pressure is measured from the line of perfect vacuum, 14.7 lbs., according to the scale below the atmospheric line.

In Fig. 117 the back pressure is found to be 3 lbs. Therefore the M. E. P. of the head end will be 26.71 – 3 = 23.71 lbs. On the crank end the M. F. P. is 27.23 lbs., and 27.23 – 3 = 24.23 lbs. = M. E. P. The average

effective pressure on the piston, therefore, will be $23.71 + 24.23 \div 2 = 23.97$ lbs.

Unless great care is exercised in the measurements, errors are liable to occur in applying this method, especially with scales representing high pressures, as 50, 80, etc. The most convenient and reliable method is to take a narrow strip of paper of sufficient length, and starting at one end, apply its edge to each ordinate in succession and mark their lengths on it consecutively with the point of a knife blade or a sharp pencil. Having thus marked on the paper the total length of all the ordinates, ascertain the number of inches and fractions of an inch thereon, the fractions to be expressed decimally, and divide by the number of ordinates. The quotient will be the average height of the diagram, and as the scale expresses the number of pounds pressure for each inch or fraction of an inch in height, if the average height of the diagram be multiplied by the number of the scale, the product will be the M. F. P.

Referring again to Fig. 117, if the lengths of the ordinates drawn on the head end diagram be measured, their sum will be found to be $6\frac{5}{8}$ or 6.666 in. Dividing this by 10 gives .666 in. as the average height. The mean forward pressure will then be as follows: $.666 \times 40 = 26.64$ lbs., or practically the same as found by the other method.

Fig. 118 illustrates a type of diagram frequently met with, and one which requires somewhat different treatment in estimating the power developed. It will be noticed that, owing to light load and early cut-off, the expansion curve drops considerably below the atmospheric line, notwithstanding that the engine from which this diagram was taken is a non-condens-

ing engine. When release occurs at R, and the exhaust side of the piston is exposed to the atmosphere, the pressure immediately rises to a point equal to, or slightly above, that of the atmosphere.

Fig. 118 was taken during a series of experiments made by the author for the purpose of ascertaining the friction of shafting and machinery, and the engine it was obtained from is a Buckeye 24 x 48 in. The boiler pressure at the time was only 40 lbs., and a No. 20 spring was used. The ordinates are drawn accord-

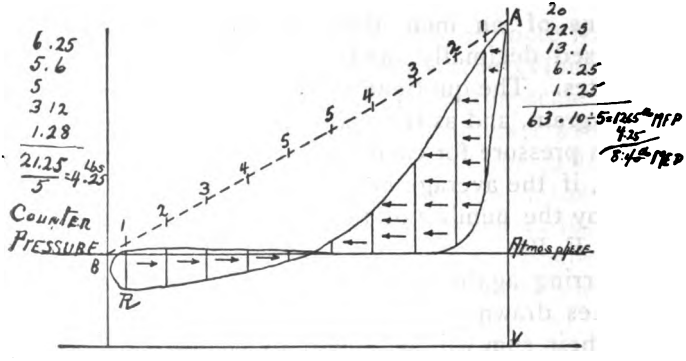

FIGURE 118

ng to the method illustrated in Fig. 117. By placing the rule on points A and B, the distance between those two points is found to be 3⅝ in., or 58 sixteenths. Dividing this by 10 gives 5.8 sixteenths, or nearly ⅜ in., as the width of the spaces; the two end spaces being one-half of this, or $\frac{3}{16}$ in. wide. The first five ordinates, counting from A, express forward pressure, represented by the arrows. The remaining five ordinates, counting from B, express counter or back

pressure, represented by the arrows pointing in the opposite direction. Measuring the pressures along the first five ordinates, and adding them together, gives 63.1 lbs., which divided by 5 gives 12.65 lbs. as the mean forward pressure (M. F. P.).

Then figuring up the counter pressure in the same manner on the other five ordinates, beginning at B, the result is 4.25 lbs. The M. E. P., therefore, will be $12.65 - 4.25 = 8.4$ lbs.

Obtaining the M. E. P. with the Planimeter. The area of the diagram represents the actual work done by the steam acting upon the piston. In a non-condensing engine the lower or exhaust line of the diagram must be either coincident with or slightly above the atmospheric line in order to express positive work. Any deviation of this line, either above or below the atmospheric line, represents counter pressure, the amount of which may be ascertained by measurements with the scale, and should be deducted from the mean forward pressure.

On the other hand, the exhaust line of a diagram from a condensing engine falls more or less below the atmospheric line, according to the degree of vacuum maintained, and the nearer this line approaches the line of perfect vacuum, as drawn by the scale, 14.7 lbs. below the atmospheric line, the less will be the counter pressure, which in this case is expressed by the distance the exhaust line is above that of perfect vacuum.

The prime requisite, therefore, in making power calculations from indicator diagrams is to obtain the average height or width of the diagram, supposing it were reduced to a plain parallelogram instead of the irregular figure which it is.

The planimeter, Fig. 119, is an instrument which will accurately measure the area of any plane surface, no matter how irregular the outline or boundary line is, and it is particularly adapted for measuring the areas of indicator diagrams, and in cases where there are many diagrams to work up, it is a very convenient instrument and saves much time and mental effort. In fact, the planimeter has of late years become an almost indispensable adjunct of the indicator. It shows at once the area of the diagram in square inches and decimal fractions of a square inch, and when the area is thus known it is an easy matter to obtain the average height by simply dividing the area in inches by the length of the diagram in inches. Having ascertained the average height of the diagram in inches or fractions of an inch, the mean or average pressure is found by multiplying the height by the scale. Or the process may be made still more simple by first multiplying the area, as shown by the planimeter in square inches and decimals of an inch, by the scale, and dividing the product by the length of the diagram in inches. The result will be the same as before, and troublesome fractions will be avoided.

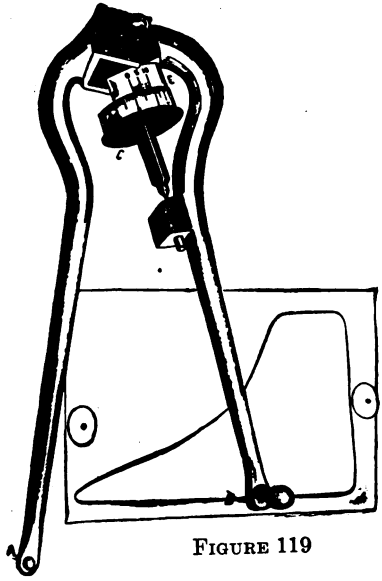

FIGURE 119

Questions

317. Who invented the indicator, and for what purpose did he apply it to his engine?

318. What are the principles governing the action of the indicator?

319. What will a truthful diagram from a steam engine cylinder show?

320. Describe in general terms the construction of an indicator.

321. Does the steam act upon both sides of the indicator piston?

322. What does the atmospheric line show?

323. Is this line important in the study of indicator diagrams?

324. Where should the line of back pressure appear in a diagram from a non-condensing engine?

325. What controls the length of stroke of the indicator piston?

326. What does the number on the spring mean?

327. Should the pencil fall below the atmospheric line in a diagram from a locomotive?

328. What is the most practical device for reducing the motion of the cross head to correspond with the motion of the indicator drum?

329. What are the main requirements in indicator connections?

330. What should be done with these pipes before attaching the indicator?

331. What regulates the height of the diagram?

332. What is a convenient rule to be observed in the selection of the spring?

333. What governs the length of the diagram?

334. Describe the best method of tracing the atmospheric line.

335. What data should be noted on the diagram as soon as taken?

336. By what means may the taking of indicator diagrams from locomotives be greatly facilitated?

337. What is absolute pressure?

338. What is gauge pressure?

339. What is initial pressure?

340. What is terminal pressure and how may it be ascertained theoretically?

341. What is back pressure?

342. What is absolute back pressure?

343. What is meant by ratio of expansion?

344. What does the term wire-drawing mean when applied to an indicator diagram?

345. What is condenser pressure?

346. What does the term vacuum imply?

347. What is absolute zero?

348. What is meant by the term piston displacement?

349. What is piston clearance?

350. What is steam clearance?

351. What is a horse-power?

352. What is meant by piston speed?

353. Define Boyle's law of expanding gases.

354. What is an adiabatic curve?

355. What is an isothermal curve?

356. What is the first law of thermodynamics?

357. What is the unit of work?

358. Define the first law of motion?

359. What is momentum?

360. What is the maximum theoretical duty of steam?

361. What is meant by the term steam efficiency?

362. How may the term engine efficiency be defined?

363. What are common logarithms?

364. What are hyperbolic logarithms, and how are they found?

365. What are ordinates as applied to an indicator diagram?

366. What is an eccentric?

367. What is meant by the throw of an eccentric?

368. What is meant by position of the eccentric?

369. What is angular advance?

370. What is meant by the expression, steam consumption of an engine?

371. What effect has back pressure upon the work of an engine?

372. What relation should the steam line of a diagram bear to the atmospheric line?

373. In calculations for steam consumption what two important factors must be considered?

374. How is the piston displacement of an engine ascertained?

375. What do the expansion and compression curves of a diagram show?

376. Is steam a gas?

377. What effect does reëvaporation have upon the expansion curve?

378. How is the horse-power of an engine calculated?

379. What is meant by the expression M. E. P.?

380. What is a planimeter?

CHAPTER VIII

COMPOUND LOCOMOTIVES

The principal object in compounding locomotives is to effect economy in fuel, and this economy is due to the fact that with the compound engine the steam may be expanded to a much lower pressure than is possible with the simple engine, before it is allowed to exhaust into the atmosphere. Another source of economy in compounding the cylinders of any steam engine, stationary or locomotive, is the prevention of that excessive condensation which is sure to result when steam at a high pressure is admitted to a cylinder, the walls of which are at a comparatively low temperature at the moment of admission, and this takes place at each stroke of the simple engine; as, for instance, assume the initial pressure to be 195 lbs., and the pressure at release to be 8 lbs. The temperature of steam at 195 lbs. is 385°, and at 8 lbs. pressure the temperature is 235°. This drop of 150° in the temperature during each stroke of the engine, tends to cool the walls of the cylinder, which will be warmed again by the next admission of steam. A large amount of heat is thus being continually absorbed by the cylinder walls, and there is also a constant loss caused by condensation.

In the compound locomotive the expansion of the steam is divided between two cylinders, proportioned in such a way that the amount of work done in each will be the same.

Various types of compound locomotives have been designed and built by eminent engineers in this coun-

try and in Europe, and while, as before stated, the main object in compounding is to utilize as much of the tremendous energy stored in the coal as it is possible to utilize, still there are other important problems to be solved in the design and operation of compound locomotives, not the least of which is to so proportion the cylinders, especially of a cross compound, that there will be an equal distribution of power on each side of the engine, or, in other words, that the engine will be balanced. Another problem that has been constantly before the purchaser and the builder of compound locomotives, is that of keeping the number of parts down to as low a figure as possible, and thus to produce a machine that will use steam on the compound principle, and yet at the same time eliminate as far as possible the liability of additional expense for repairs that has always been connected with the compound as compared with the simple engine.

The progress along these lines has been slow, but there has been a marked development in the right direction, and there is no doubt that the compound locomotive has come to stay, and that eventually it will become the standard type. It therefore behooves engine men (engineers and firemen) to study them, and endeavor to familiarize themselves with their construction and operation.

There are in use at the present time, in this country, four separate and distinct types of compound locomotives, each having its peculiar features. First, there is the Vauclain compound. This is a four cylinder engine, having two cylinders on each side of the engine. One of these cylinders is a high-pressure and the other a low-pressure cylinder, one being located directly above the other.

Second, the balanced compound, a four cylinder engine, the two high-pressure cylinders being located under the center of the smoke arch, between the frames, and the two low-pressure cylinders on the outside.

Third, the tandem compound, a four cylinder engine, having one high and one low-pressure cylinder on each side, these cylinders being in line with each other, and served by one piston rod, thus bringing all the strains in direct line also.

Fourth, the cross compound, a two cylinder engine, having the high-pressure cylinder on one side, and the low-pressure cylinder on the opposite side, the diameter or bore of the cylinders being proportioned in such manner that an equal amount of power will be developed on both sides. This ratio is generally one to three, that is, the area of the low-pressure piston is about three times that of the high, for the reason that the initial pressure of the steam admitted to the low-pressure cylinder is greatly reduced below the point at which it entered the high-pressure cylinder, and requires a larger area of piston to act upon in order to produce the same amount of power that it did in the high-pressure cylinder. These four forms of compound locomotives will be taken up, and each discussed in its regular order. The same valve gear is used upon compound locomotives as upon simple engines or those in which there is but single expansion.

The Vauclain compound locomotive is the invention of Mr. Samuel M. Vauclain of the Baldwin Locomotive Works, and the following description of this system of compounding has been mainly furnished by the Baldwin Locomotive Works of Philadelphia, Pa.

In designing the Vauclain system of compound loco-

motives, the aim has been:

1. To produce a compound locomotive of the greatest efficiency, with the utmost simplicity of parts and the least possible deviation from existing practice. To realize the maximum economy of fuel and water.

2. To develop the same amount of power on each side of the locomotive, and avoid the racking of machinery resulting from unequal distribution of power.

3. To insure at least as great efficiency in every respect as in a single-expansion locomotive of similar weight and type.

4. To insure the least possible difference in cost of repairs.

5. To insure the least possible departure from the method of handling single-expansion locomotives; to apply equally to passenger or freight locomotives for all gauges of track, and to withstand the rough usage incidental to ordinary railroad service.

The principal features of construction are as follows:

Cylinders. The cylinders consist of one high-pressure and one low-pressure for each side, the ratio of the volumes being as nearly three to one as the employment of convenient measurements will allow. They are cast in one piece with the valve-chamber and saddle, the cylinders being in the same vertical plane, and as close together as they can be with adequate walls between them.

Where the front rails of the frames are single bars, the high-pressure cylinder is usually put on top, as shown in Fig 120, but when the front rails of frames are double, the low-pressure cylinder is usually on top, as shown in Fig. 121.

The former (Fig. 120) is used in "eight-wheel" or

American type passenger locomotives, and in "ten-wheeled" locomotives, while the latter (Fig. 121) is used in Mogul, Consolidation and Decapod locomotives; for the various other classes of locomotives the most suitable arrangement is determined by the style of frames.

Fig. 122 shows the arrangement of the cylinders in relation to the valve.

The valve employed to distribute the steam to the

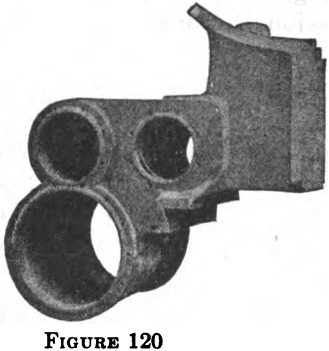

FIGURE 120

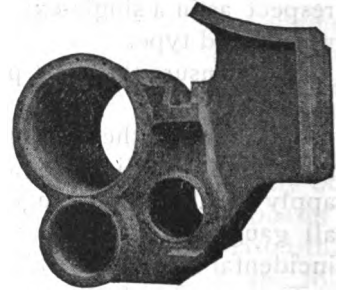

FIGURE 121

cylinders is of the piston type, working in a cylindrical steam-chest located in the saddle of the cylinder casting between the cylinders and the smoke-box, and as close to the cylinders as convenience will permit.

As the steam-chest must have the necessary steam passages cast in it and dressed accurately to the required sizes, the main passages in the cylinder casting leading thereto are cast wider than the finished ports. The steam-chest is bored out enough larger than the diameter of the valve to permit the use of a hard cast iron bushing (Fig. 123). This bushing is forced into the steam-chest under such pressure as to prevent the escape of steam from one steam passage

to another except by the action of the valve. Thus an opportunity is given to machine accurately all the various ports, so that the admission of steam is uniform under all conditions of service.

The valve, which is of the piston type, double and hollow, as shown in Fig. 124, controls the steam admission and exhaust of both cylinders. The exhaust steam from the high-pressure cylinder becomes the supply steam for the low-pressure cylinder. As the supply steam for the high-pressure cylinder

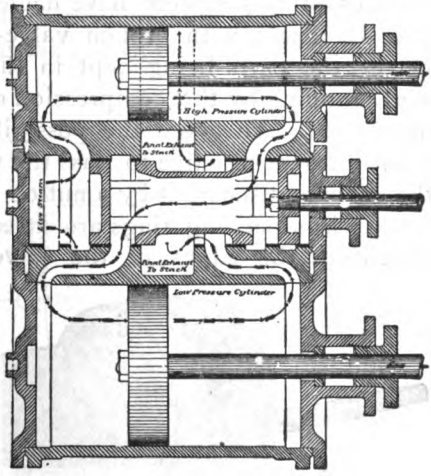

FIGURE 122

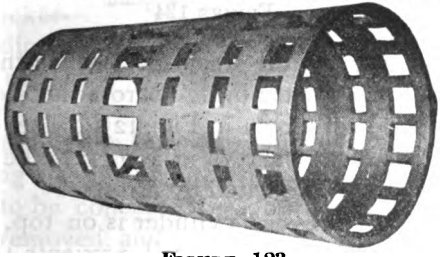

FIGURE 123

enters the steam chest at both ends, the only variation from balance being area of steam at back end, an advantage in case valve or connection to

the valve-rod should be broken, as it holds them together. Cases are reported where compound locomotives of this system have hauled passenger trains long distances with broken valve-stems and broken valves, the parts being kept in their proper relation while running by the compression due to the variation mentioned. To avoid the possibility of breaking, it is the present practice to pass the valve-stem through the valve and secure it by a nut on the front end.

Cast iron packing rings are fitted to the valve and constitute the edges of the valve. They are pre-

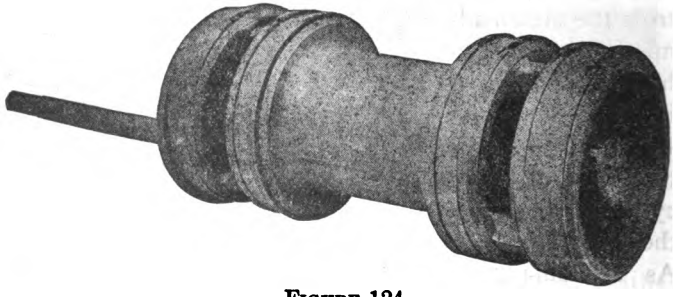

FIGURE 124

vented from entering the steam-ports when the valve is in motion by the narrow bridge across the steam-ports of the bushing, as shown in Fig. 123. The operation of the valve is clearly shown in Fig. 122, the direction of the steam being indicated by arrows.

When the low-pressure cylinder is on top, as shown in. Fig. 121, the double front rail prevents the use of the ordinary rock-shaft and box, and the valve motion is then what is called "direct acting," changing the location of the eccentrics on the axle in relation to the crank-pin. When the low-pressure cylinder is underneath, the rock-shaft is employed, and the

eccentrics are placed in the usual position; the valve motion is termed "indirect acting." Fig. 125 shows the relation of the eccentrics with and without the rocker-shaft. Great care should be taken by mechanics, when setting the valves on these locomotives, to observe this difference and not get the eccentrics improperly located on the axle. If the crank-pin is placed on the forward center, the eccentric-rods will not be crossed when the rocker-arm or indirect motion is used, but will be crossed when no rocker-arm or direct motion is used. Serious complications have arisen from this being disregarded.

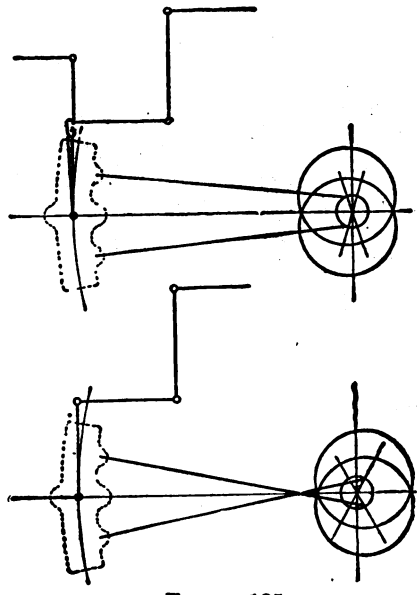

FIGURE 125

In setting the piston valves, only the high-pressure ports are to be considered. Both heads of the steam chest are removed, and with a tram, from some point on the body of the cylinder to the valve stem, the line and line positions of the valve in both front and back motion, are laid off and indicated by a prick punch mark on the valve stem. Using the same tram, the position of the valve at different parts of the stroke

can be ascertained, and the opening of the ports noted by the distance from the point of the tram to the prick punch mark. The relation of the low pressure ports to the valve must be ascertained by measurement, the same as the exhaust ports in ordinary slide valves.

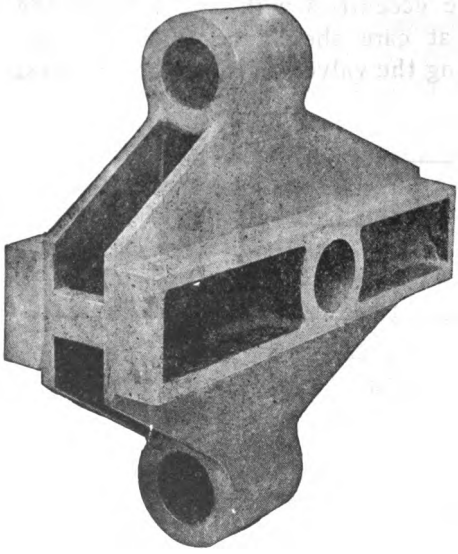

FIGURE 126

Various methods have been employed to transfer the motion from the links to the valve-rod. That which has proved most satisfactory is to attach the ends of the link and valve-rods to the arms of an intermediate oscillating shaft. This arrangement allows for the free vertical movement of the end of the rod attached to the link, and gives a parallel movement to the valve-rod. It also makes it convenient to obtain any required lateral variation in the line of the two rods. These parts are thoroughly case-hardened, and with reasonable care should wear indefinitely. It

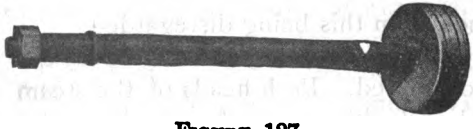

FIGURE 127

is preferable, however, to use a rock-shaft when possible, as there is then less departure from ordinary locomotive practice.

The cross-head is shown in Fig. 126. It is made of open-hearth cast steel and is machined accurately to

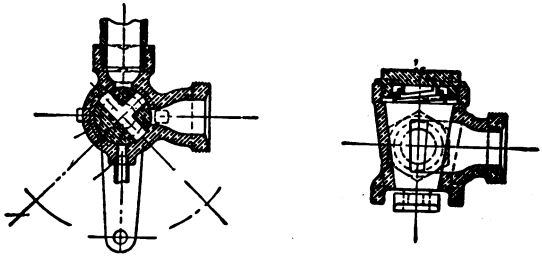

FIGURE 128

size. The bearings for the guide-bars are covered with a thin coating of block tin, about one-sixteenth inch thick, which wears well and prevents heating. The holes for the piston-rods are bored so that the piston-rods will be perfectly parallel, and are tapered to insure a perfect fit.

The piston shown in Fig. 127 is made with either cast iron or cast steel heads, and is as light as possible. The rods, which are of triple-refined iron, are ground perfectly true to insure good service in connection with metallic packing for the stuffing boxes. The diameter

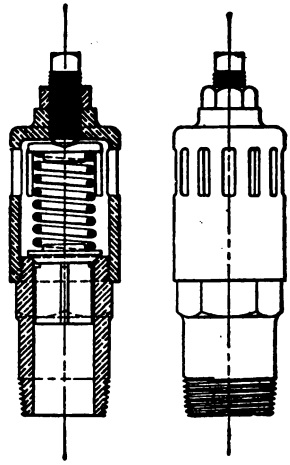

FIGURE 129

of both piston-rods is the same, both having equal work to perform. They are made large enough to resist strains due to any unequal pressure that may come upon them in starting the locomotive from a state of rest. The cross-head end has a shoulder which prevents the piston-rod being forced into the cross-head, and at the same time permits the cross-head end and the body of the piston-rod to be of one diameter, thus permitting vibratory strains to act throughout the entire length of the rod instead of concentrating them at the shoulder next to the cross-head. The piston-rods are secured to the cross-head by large nuts, and these in turn are prevented from coming loose by taper keys driven tightly against them.

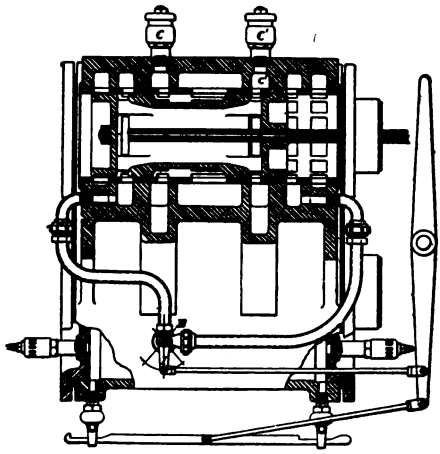

FIGURE 130

It is obvious that in starting these locomotives with full trains from a state of rest, it is necessary to admit steam to the low-pressure cylinder as well as to the high-pressure cylinder, which is accomplished by the use of a starting valve (Fig. 128). This is merely a pass-by valve which is opened to admit steam to pass from one end of the high-pressure cylinder to the other end and thence through the exhaust to the low-pres-

sure cylinder. This is more clearly shown at E in Figs. 130 and 131. The same cock acts as a cylinder cock for the high-pressure cylinder and is operated by the same lever that operates the ordinary cylinder cocks, thus making a simple and efficient device and one that need not become disarranged. This valve should be kept shut as much as possible, as its indiscriminate use reduces the economy and makes the locomotive "logy."

As is usual in all engines, air valves are placed in the main steam passage of the high-pressure cylinder. Additional air valves, marked C and C^1 in Fig. 130, are placed in the steam passages of the low-pressure cylinders to supply them with sufficient air to prevent the formation of a vacuum which would draw cinders into the steam-chest and cylinders.

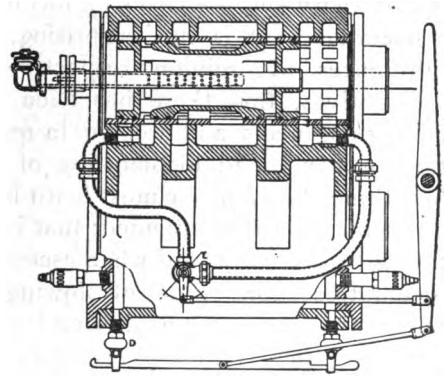

FIGURE 131

The hollow valve stem shown in Fig. 131 accomplishes the same result, but with a more direct action, and is preferable for fast service. The check valve at the end of the hollow stem outside the steam chest is closed by the pressure of the steam, but stands open when the pressure is relieved and air is allowed to pass into the valve through the perforation in the hollow stem. A vacuum is thus prevented from forming in the valve or low-pressure passages.

This arrangement will also prevent the accidental starting of the locomotive occasioned by a leaky throttle. The steam as it slowly escapes will pass through the hollow stem to the open air without creating pressure in the cylinders.

Water relief valves (Fig. 129) are applied to the low-pressure cylinders and attached to the front and back cylinder heads to prevent the rupture of the cylinder in case a careless engineer should permit the cylinders to be charged with water, or to relieve excessive pressure of any kind.

In all other respects the locomotive is the same as the ordinary single-expansion locomotive.

Operation. It is not surprising, in view of their differences of opinion respecting single-expansion locomotives, that there has been much controversy among engineers and firemen in regard to the operation of compound locomotives of this system. The first thing the engineer must learn is to use the reverse lever for what it is intended; that is, he must not hesitate to move it forward when ascending a grade if the locomotive shows signs of slowing up. The reverse quadrant is always so made that it is impossible to cut off steam in the high-pressure cylinder at less than half stroke, which avoids the damage that might ensue from excessive compression. It is perfectly practicable to operate the engine at any position of the reverse lever between half stroke and full stroke, without serious injury to the fire. When starting the locomotive from a state of rest, the engineer should always open the cylinder cocks to relieve the cylinders of condensation, and as the starting valve is attached to the cylinder cocks, this movement also admits steam to the low-pressure cylinder and enables the locomotive

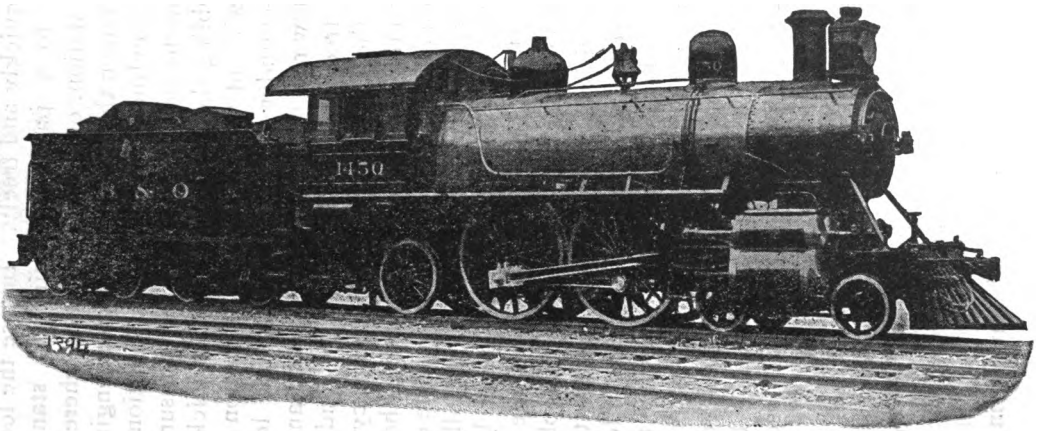

ATLANTIC TYPE LOCOMOTIVE, BALTIMORE & OHIO RAILROAD

to start quickly and freely. In case the locomotive is attached to a passenger train and standing in a crowded station, or in some position where it is undesirable to open the cylinder cocks, the engineer should move the cylinder cock lever in position to permit live steam to pass by into the low-pressure cylinder, thus enabling the locomotive to start quickly and uniformly, without any of the jerking motion so common in two-cylinder or cross-compound locomotives. After a few revolutions have been made and the cylinders are free from water caused by condensation or priming, the engineer should move the cylinder cock lever into the central position, causing the engine to work compound entirely. This should be done before the reverse lever is disturbed from its full gear position. The reverse lever should never be "hooked up," thereby shortening the travel of the valve, until after the cylinder cock lever has been placed in the central position. It is often necessary to open the cylinder cocks when at full speed, to allow water to escape from the cylinders, especially when the engineer is what is commonly called a "high-water" man, and in such case no disadvantage is experienced and the reverse lever need not be disturbed. The starting device should not be used for any purpose other than the "starting" of the train. After the train is in motion it should not be used. Cases have been observed where the engineers use it all the time and have the reverse lever "hooked up" in the top notch (half stroke), in consequence of which the locomotive will slow down to a low speed whilst burning an excessive amount of coal. Such running must result in general dissatisfaction.

The starting device is useful in emergencies, as, for

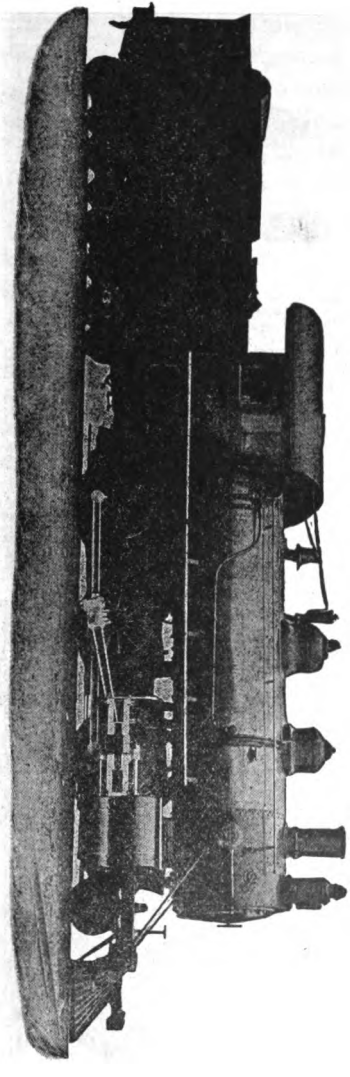

MOGUL FREIGHT LOCOMOTIVE, CHICAGO & ALTON RAILWAY

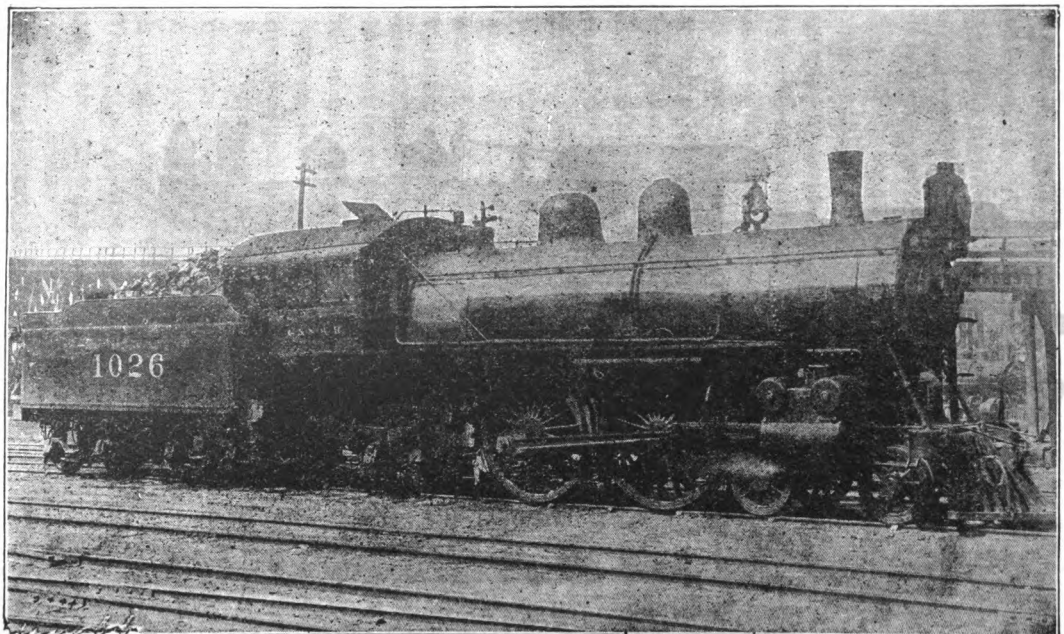

LOCOMOTIVE EQUIPPED WITH THE YOUNG ROTATIVE VALVE

instance, when stalling with a heavy train on a grade, if live steam is admitted to the low-pressure cylinder sufficient additional power is obtained to start the train and take it over the grade. This should be resorted to only in emergencies, and allowance should be made for the extra repairs caused by frequent cases of this kind.

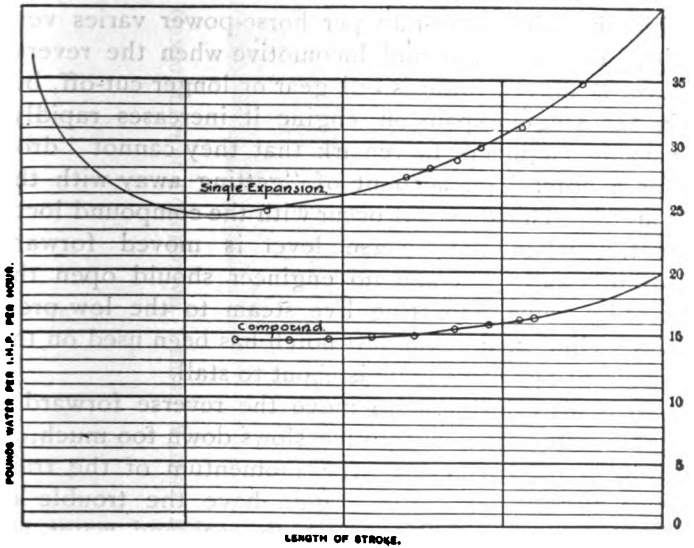

FIGURE 132

On account of the very mild exhaust, the fireman should carry the fire as light as possible. A little practice will enable him to judge how to get along with the least amount of fuel.

The diagram (Fig. 132) shows the difference in the amount of water required to do the work at various points of cut-off in compound and single-expansion locomotives. The upper line shows the rate of water

consumption per horse-power developed for several points of cut-off in single-expansion locomotives, whilst the lower line shows the same for compound locomotives. It will be observed that the most economical point of cut-off is about one-quarter stroke on the single-expansion locomotive, and about five-eighths stroke on the compound locomotive. It is also noticeable that the water-rate per horse-power varies very little on the compound locomotive when the reverse lever is moved towards full gear or longer cut-off, but in the single-expansion engine it increases rapidly, causing engineers to remark that they cannot "drop her a notch" on account of "getting away with the water." This does not occur with the compound locomotive when the reverse lever is moved forward towards full gear, and no engineer should open the pass-by valve, admitting live steam to the low-pressure cylinder, until the last notch has been used on the quadrant and the engine is about to stall.

It is also desirable to move the reverse forward a notch before the locomotive slows down too much, as it is better to preserve the momentum of the train than to slow down and again have the trouble of accelerating. In this way both coal and water are wasted. If these instructions are observed the locomotive will work satisfactorily.

Repairs. On account of the great similarity to single-expansion locomotives, mechanics familiar with the latter have no difficulty in understanding these compound locomotives. There is no new element of repairs introduced, no complicated starting or reducing valves, such as are common to other systems of compound locomotives.

The cross-heads, when badly worn, may, in a short

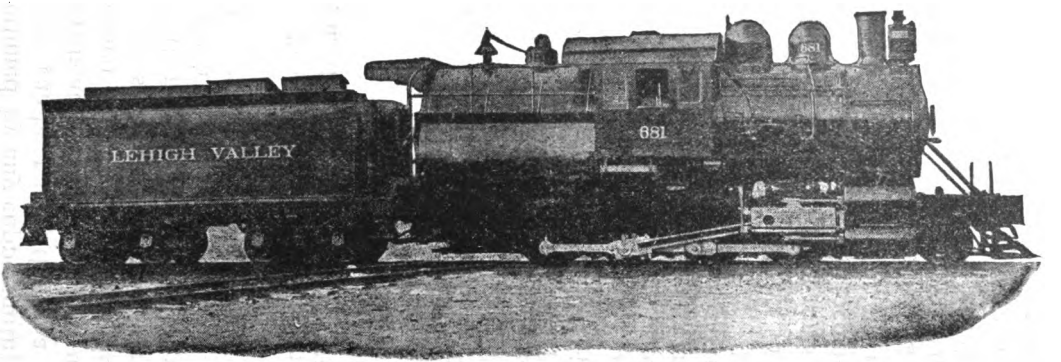

CONSOLIDATION LOCOMOTIVE, LEHIGH VALLEY RAILROAD

time, be retinned by any coppersmith; in fact, an ordinary laborer can be taught this in a few days. The cross-head is heated warm enough to melt solder, and is then cleaned and wiped with solder, using dilute muriatic acid, such as tinsmiths use in soldering. Block tin is then poured against the surfaces so prepared, to which it adheres. A piece of iron placed alongside the cross-head can be used to regulate the thickness

The cross-head is then put on a planer to true it up, care being used not to let the tool "dig in" and tear off the tin.

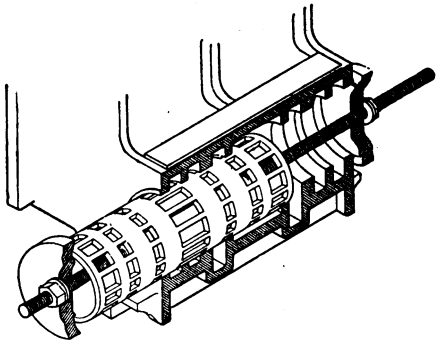

FIGURE 133

The pistons are treated the same as in ordinary single-expansion engines. The packing-rings in the low-pressure cylinder require renewal more frequently than those in high-pressure cylinders. It is also more difficult in compound cylinders to detect faulty packing rings, and they are sometimes noticed only by the locomotive failing in steam and in not making time on the road.

The piston-valves should last a long time if properly lubricated, but when the bushing (Fig. 123) and valve (Fig. 124) are worn enough to require attention, the bushing should be bored out and new rings put in the valve; very often it is not necessary to bore the bushings, merely to put new packing-rings in the valve.

After the bushings (Fig. 123) have been bored several times, larger valves may be fitted to them, so as to have as little play as possible. A very convenient type of boring bar for boring out the bushings has been designed, by which the work can be done without taking down the back head of the steam-chest. It is possible with this tool to bore out the bushings in less time than required to face a valve seat on a single-expansion locomotive.

When putting new bushings in the steam-chests, the device shown in Fig. 133 may be used, which gives the required power and is slow enough to permit the bushing to accommodate itself to the cylinder casting.

When extracting old bushings, it is best to split them with a narrow cape chisel—they are only fit for scrap when removed, and can be much more quickly removed this way than to attempt to draw them out with draw screws.

Enough attention should be given the starting valves to insure their moving in harmony with each other. Engineers sometimes strain the cylinder cock shaft, which causes one starting valve to open and the other to remain shut; this causes the exhaust to beat unevenly, and the engineer is apt to complain that the valves are out of square. Before altering the valve motion on these engines, make sure that the starting valves open and close simultaneously, and examine low-pressure pistons and piston-valve for broken packing-rings. In one case an engineer ran his locomotive two days without any piston-head on one of the low-pressure pistons, and even then could not tell what was the matter, only that the locomotive sounded "lame" and did not make good time with the train.

Men were put to work to locate the trouble, and found it, to the great surprise of the engineer.

Suggestions for Running a Vauclain Four-Cylinder Compound Locomotive. In starting the locomotive with a train, place the reverse lever in full forward position, throw the cylinder-cock lever forward, which operation opens the starting-valve and allows live steam to pass to the low-pressure cylinder. The throttle is then opened, and as soon as possible when the cylinders are free of water and the train is under good headway, the cylinder cocks and starting-valve should be closed. As the economy of a compound locomotive depends largely on its greater range of expansion, the engineer should bear in mind that in order to get the best results he must use his reverse lever. After the starting-valve is closed and as the speed of the train increases, the reverse lever should be hooked back a few notches at a time until the full power of the locomotive is developed. If after moving the reverse lever to the last notch, which cuts off the steam at about half stroke in the high-pressure cylinder, it is found that the locomotive develops more power than is required, the throttle must be partially closed and the flow of steam to the cylinder reduced. On slightly descending grades the steam may be throttled very close, allowing just enough in the cylinders to keep the air-valves closed. If the descent is such as to prevent the use of steam, close the throttle and move the reverse lever gradually to the forward notch and move the starting-valve lever to its full backward position. This allows the air to circulate either way through the starting-valve from one side of the piston to the other, relieves the vacuum, and prevents the oil from being blown out of the cylinder. On ascending grades with

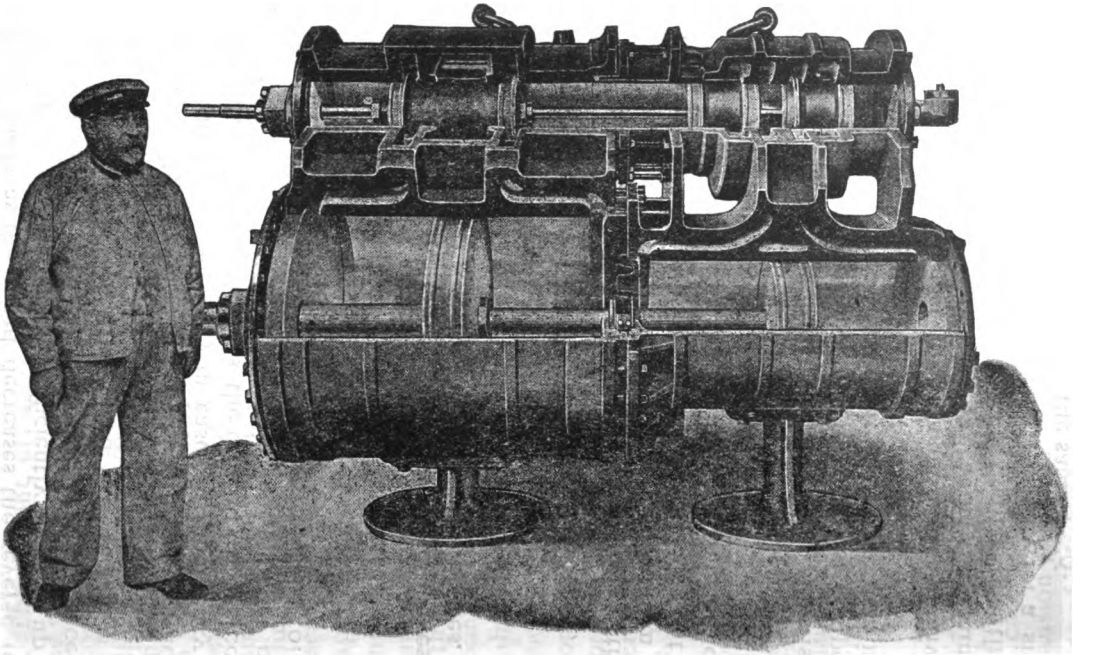

MODEL OF ACTUAL SIZE, SHOWING TWO LOCOMOTIVE CYLINDERS AND VALVES OF THE VAUCLAIN TANDEM COMPOUND SYSTEM

heavy loads as the speed decreases the reverse lever should be moved forward sufficiently to keep up the equired speed. If, after the reverse lever is placed in the full forward notch, the speed still decreases and there is danger of stalling, the starting-valve may be used, admitting steam to the low-pressure cylinders. This should be done only in cases of emergency and the valve closed as soon as the difficulty is overcome.

The tractive power of Vauclain four-cylinder compound locomotives may be ascertained by the following formula:

$$\frac{C^2 \times S \times \frac{2}{3} P}{D} + \frac{c^2 \times S \times \frac{1}{4} P}{D} = T, \text{ in which}$$

C = Diameter of high-pressure cylinder in inches.
c = Diameter of low-pressure cylinder in inches.
S = Stroke of piston in inches.
P = Boiler pressure in pounds.
D = Diameter of driving wheels in inches.
T = Tractive power.

It is not claimed for compound locomotives that a heavier train can be hauled at a given speed than with a single-expansion locomotive of similar weight and class. No locomotive can haul more than its adhesion will allow; but the compound will, at very slow speed on heavy grades, keep a train moving where a single-expansion locomotive will slip and stall. This is due to the pressure on the crank-pins of the compound being more uniform throughout the stroke than is the case with the single-expansion locomotive.

The principal object in compounding locomotives is to effect fuel economy, and this economy is obtained—

1. By the consumption of a smaller quantity of steam in the cylinders than is necessary for a single-expansion locomotive doing the same work.

2. The amount of water evaporated in doing the same work being less in the compound, a slower rate of combustion combined with a mild exhaust produces a higher efficiency from the coal burned.

In a stationary engine, which does not produce its own steam supply, it is of course proper to measure its efficiency solely by its economical consumption of steam. In an engine of this description the boilers are fired independently, and the draft is formed from causes entirely separate and beyond the control of the escape of steam from the cylinders; hence, any economy shown by the boilers must of necessity be separate and distinct from that which may be effected by the engine itself. In a locomotive, however, the amount of work depends entirely upon the weight on the driving-wheels, the cylinder dimensions being proportioned to this weight; and whether the locomotive is compound or single-expansion, no larger boiler can be provided, after allowing for the wheels, frames, and other mechanism, than this weight permits. Therefore, the heating surfaces and grate area are practically the same in both types, and the evaporative efficiency of both locomotives is determined by the action of the exhaust, which must be of sufficient intensity in both cases to generate the amount of steam necessary for utilizing, to the best advantage, the weight on the driving-wheels. This is a feature that does not appear in a stationary engine, so that the compound locomotive cannot be judged by stationary standards, and the only true comparison to be made is between locomotives of similar construction and weight, equipped in one case with compound and in the other with single-expansion cylinders.

One of the legitimate advantages of the compound

system is that, owing to the better utilization of the steam, less demand is made upon the boiler, which enables sufficient steam-pressure to be maintained with the mild exhaust, due to the low tension of the steam when exhausted from the cylinders. This milder exhaust does not tear the fire, nor carry unconsumed fuel through the flues into the smoke-box and thence out of the smoke-stack, but is sufficient to maintain the necessary rate of combustion in the fire-box with a decreased velocity of the products of combustion through the flues.

The heating surfaces of a boiler absorb heat units from the fire and deliver them to the water at a certain rate. If the rate at which the products of combustion are carried away exceeds the capacity of the heating surfaces to absorb and deliver the heat to the water in the boiler, there is a continual waste that can be overcome only by reducing the velocity of the products of combustion passing through the tubes. This is effected by the compound principle. It gives, therefore, not only the economy due to a smaller consumption of water for the same work, but the additional economy due to slower combustion. It is obvious that these two sources of economy are interdependent.

The improved action of the boiler can be obtained only by the use of the compound principle, while the use of the compound principle enables the locomotive to develop its full efficiency under conditions which in a single-expansion locomotive would require a boiler of capacity so large as to be out of the question under the circumstances usually governing locomotive construction. It is therefore evident that where both locomotives are exact duplicates in all their parts, excepting the cylinders, the improved action of the

boiler is due entirely to the compound principle, and the percentage of economy should be based upon the total saving in fuel consumption, and not upon the water consumption, as in stationary practice.

For the benefit of those who may test these locomotives, the following method is presented of determining the water rate per horse-power from an indicator diagram:

S = Stroke in inches.
C = Per cent of stroke completed at cut-off.
P = Pressure of steam at cut-off, taken from zero.
Wp = Weight per cubic foot of steam at P pressure.
H = Per cent of stroke uncompleted at compression.
Q = Pressure of steam at compression, taken from zero.
Wq = Weight per cubic foot of steam at Q pressure.
E = Per cent of clearance in H.-P. cylinders.
A = Area of H.-P. cylinders.
P = M.E.P. of H.-P. cylinders.
a = Area of L.-P. cylinders.
K = M.E.P. of L.-P. cylinders.
N = Number of revolutions per minute.
r = Ratio $\frac{a}{A}$; hence, $a = A \times r$.

All calculations are made on the basis of the high-pressure cylinder doing the work of both cylinders.

The volume of the piston displacement is AS, and the volume at cut-off is $A\,S\,C$, since C is the proportion of stroke completed at cut-off. The volume of N revolutions would be $A\,N\,S\,C$. As there are two strokes of the piston for each revolution, and there is an engine on each side of the locomotive, assuming that both engines are doing exactly the same work, there would be four strokes per revolution; hence $4\,A\,N\,S\,C$ is the

volume of piston displacement at cut-off for one revolution. Since the clearance-space is expressed in percentage of the piston displacement of one stroke, and this space is filled at each stroke, the volume of the clearance-space for one revolution would be $4\,ANSE$. The sum of these two quantities divided by 1728 will give the volume in cubic feet. The indicator-card gives the pressure at cut-off, and a reference to Table 4 will give the weight of steam at that pressure; hence, the amount of steam used per revolution becomes $\left(\frac{4\,ANSC+4\,ANSE}{1728}\right) Wp$. But there is a certain amount of steam saved at compression, and the volume at this point would be $\left(\frac{4\,ANSH+4\,ANSE}{1728}\right) Wq$, the volume of the clearance space being again taken into consideration. Since this steam is saved by compression, it should be deducted from the amount used, and the formula becomes:

$$\left(\frac{4\,ANSC+4\,ANSE}{1728}\right) Wp-\left(\frac{4\,ANSH+4\,ANSE}{1728}\right) Wq;$$

or $$\frac{4\,ANS}{1728}\left((C+E)\,Wp-(H+E)\,Wq\right).$$

The H.-P. equals $\frac{4\,ANS(P+rK)}{12\times 33{,}000}$.

Then the water rate per minute would be

$$\frac{\frac{4\,ANS}{1728}\left((C+E)\,Wp-(H+E)\,Wq\right)}{\frac{4\,ANS(P+rK)}{12\times 33{,}000}},$$

or $$\frac{229.16}{P+rK}\left((C+E)\,Wp-(H+E)\,Wq\right);$$

and the rate per hour would be $\frac{60\times 229.16}{P+rK}$,

or $\frac{13750}{P+rK}\left((C+E)\,Wp-(H+E)\,Wq\right)$, which formula is to be used.

If *it* is desired to get the steam at release H.-P., substitute the value of the point R and pressure t, also $S \times R$, respectively, for C, p, and $C \times S$. See Figs. 134 and 134½.

M.E.P. H.-P. cylinder....87 pounds Clearance.. .08
M.E.P. L.-P. cylinder....32 pounds Ratio..2.87 to 1
M.E.P. referred to H.-P. cylinder.....178.84
M.E.P. referred to L.-P. cylinder.....62.31

$$178.84 = P + rK$$

$$62.31 = K + \frac{P}{r}$$

135.3
14.7
150.0 = .3376 pound per cubic foot of steam at cut-off H.-P. cylinder.

60.3
14.7
75.0 = .1756 pound per cubic foot of steam at compression H.-P. cylinder.

30.
14.7
44.7 = .1079 pound per cubic foot of steam at point on L.-P. expansion line.

16.
14.7
30.7 = .0758 pound per cubic foot of steam at compression L.-P. cylinder.

$$\frac{13750}{178.84} = 76.88 \qquad \frac{13750}{62.31} = 220.67$$

$(.677 + .08) \times .3376 = .2556$ $(.238 + .08) \times .1756 = .0558$

.2556
.0558
.1998

$.1998 \times 76.88 = 15.36$ pounds steam at cut-off H.P. cylinder.

$(.744 + .08) \times .1079 = .0889$ $(.083 + .08) \times .0758 = .0124$

.0889
.0124
.0765

$.0765 \times 220.67 = 16.89$ pounds steam at point on expansion line L.-P. cylinder.

Balanced Compounds. The ideal reciprocating steam engine, stationary or locomotive, simple or compound, is an engine in which the reciprocating parts are perfectly balanced against each other, and that balancing should be accomplished without the aid of rotative counter weights. This can be done only by a correct distribution of the steam to the two or more cylinders, and then transmitting the energy developed in each cylinder, directly through the medium of its own piston rod and connecting rod to the engine shaft. The proper balancing of the reciprocating parts of locomotives has always been an especially serious problem, and has grown more serious with the gradual increase in the size and speed of engines. But American locomotive builders have not been timid in meeting and solving this problem, and to-day the four-cylinder balanced compound locomotive stands forth as a splendid specimen of mechanical ingenuity and skill in designing, and will in time, if given a square deal, prove to be the ideal locomotive.

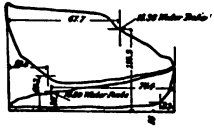

FIGURE 134

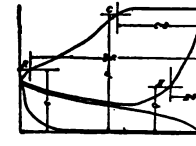

FIGURE 134 a

The Baldwin Locomotive Works kindly supply the following brief description of the four-cylinder balanced compound built by them.

The cylinders are a development of the original Vauclain four-cylinder compound type, with one piston slide valve common to each pair.

Instead of being superimposed and located outside of the frames, the cylinders are placed horizontally in

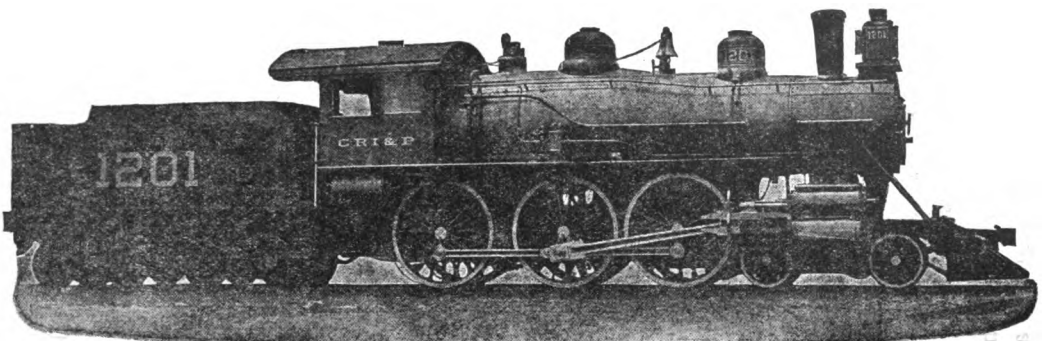

TEN WHEEL PASSENGER ENGINE, C. R. I. AND P.

line with each other, the low-pressure outside, and the high-pressure inside the frames.

The slide valves are of the piston type, placed above

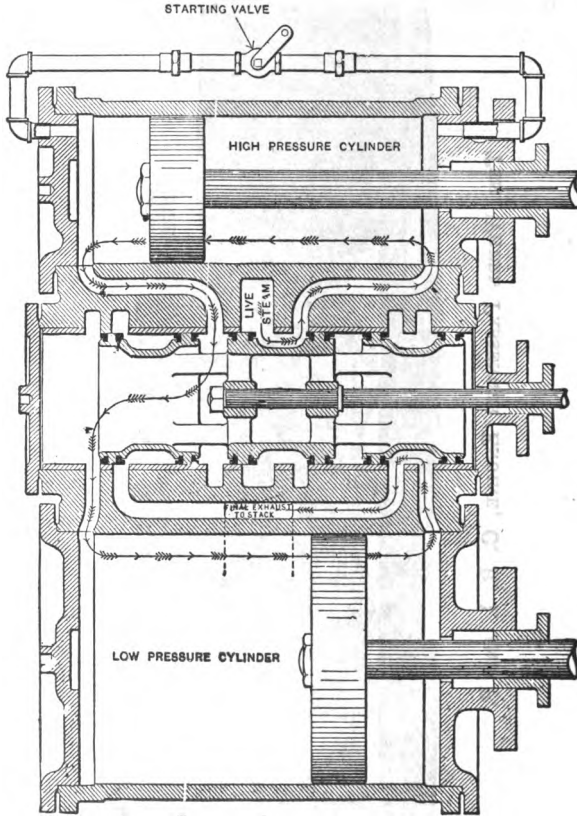

STEAM DISTRIBUTION IN BALANCED COMPOUND CYLINDERS.

FIGURE 135

and between the two cylinders which they are arranged to control. A separate set of guides and connections is required for each cylinder.

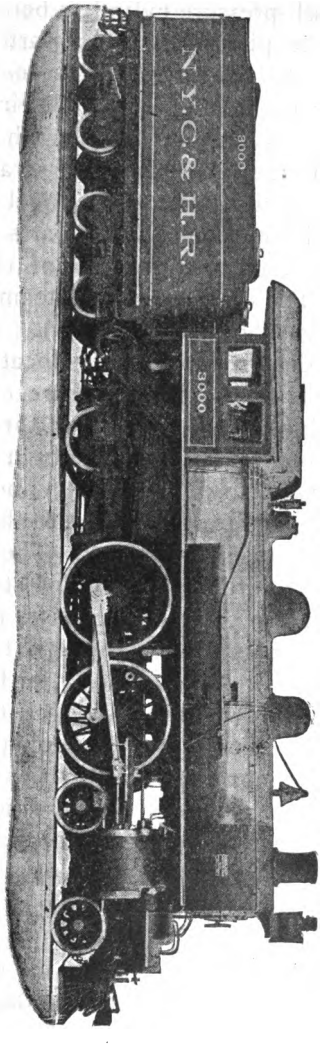

4 CYLINDER BALANCED COMPOUND,
BUILT FOR N. Y. C. AND H. R. R.

The two high-pressure cylinders being placed **inside** the frames, the pistons are necessarily coupled to a crank axle. The low-pressure pistons are coupled to crank-pins on the outside of the driving wheels. The cranks on the axle are set at 90° with each other, and at 180° with the corresponding crank-pins in the wheels. The pistons therefore travel in the opposite direction, and the reciprocating parts act against, and balance each other to the extent of their corresponding weight. The distribution of steam is shown in the accompanying diagram (Fig. 135). The live steam port in this design is centrally located between the induction ports of the high-pressure cylinder. Steam enters the high-pressure cylinder through the steam port and the central external cavity in the valve. The exhaust from the high-pressure cylinders takes place through the opposite steam port to the interior of the valve, which acts as a receiver. The outer edges of the valve control the admission of steam to the low-pressure cylinder. The steam passes from the front of the high-pressure cylinder through the valve to the front of the low-pressure cylinder, or from the back of the high-pressure to the back of the low-pressure cylinder. The exhaust from the low-pressure cylinder takes place through external cavities under the front and back portion of the valve, which communicate with the final exhaust port. The starting valve connects the two live steam ports of the high-pressure cylinder to allow the steam to pass over the piston.

The American Locomotive Company build a four-cylinder balanced engine, having the cylinders located in practically the same manner as the Baldwin engine just described.

The use of four cylinders, two high-pressure and two

low-pressure, gives an opportunity for compounding under the most favorable conditions, and with each high-pressure piston working 180° from its low-pressure piston, and the other pair working 90° from the first pair, the successive impulses from the four cylinders produce a remarkably uniform turning moment. This results in a much more rapid rate of acceleration when starting up than has been possible with two-cylinder engines or with many previous types of four-cylinder engines.

The following advantages are claimed for the balanced type of locomotives, by their builders, and the claim appears to be well founded.

1. The elimination of counterbalance weights from the driving wheels, the engine nevertheless being in perfect balance both horizontally and vertically. This results in the complete absence of slip at high speed.

2. The more perfect compounding which results from this arrangement of cylinders, whereby it becomes possible to secure more favorable cylinder volume ratios than with the two-cylinder compound.

3. The consequent approximately uniform turning moment throughout each revolution.

4. The power of quick acceleration, resulting partly from the uniform turning moment and partly from admitting to the low-pressure cylinders, at the time of starting and through a special starting valve, live steam at reduced pressure.

5. The reduction of stresses in the driving axles, crank-pins and other parts of machinery due to the system of distributing power from the cylinders, approximately one-half being transmitted to the forward driving axle and one-half to the rear axle.

6. Increased hauling capacity and endurance at high

speed, due principally to the perfection of the compounding and the consequent economical use of steam, but partly also on account of the perfect balance of the reciprocating and revolving parts.

Tandem Compounds. Theoretically the tandem compound with its four cylinders would appear at first glance to be the ideal design, especially for locomotives, as it places the cylinder in line, and as a result of this the strains are all brought to bear along the same axis. One connecting rod, one set of guides, and one piston rod, serve to reduce the number of parts and, although there are two valves, one for the high-pressure cylinder and one for the low, yet one valve rod operates both valves. Notwithstanding that the tandem compound has all of these and numerous other points in its favor, it does not appear to have grown in popularity in the same degree as have the other types of compound locomotives.

One of the main objections to the tandem, and no doubt a well-founded one, is based upon the difficulties that are encountered in the examination and repair of the pistons and valves.

In many of the designs the methods that must of necessity be employed to do this work are very complicated, and consume too much time to meet with the approval of the "Boss"; and when it comes to running the engine out on the road, there are many engineers who are not studious enough, by nature, to make a success of running a compound, especially of the tandem type. A compound engine, whether marine, stationary, or locomotive, requires careful handling, more so in fact than does a simple engine, and if the engineer in charge of one expects to get good results from her, it is absolutely necessary that

he should have at least an elementary knowledge of the principles upon which it is constructed, the routes of the steam passages, the construction of the valves, pistons, etc. This knowledge is easily within the grasp of every engineer, and every fireman who expects to become an engineer, and the opportunities for obtaining it are many.

The tandem compound built by the American Locomotive Company has been quite largely used in freight service during the last five years, and has met with a fair degree of success.

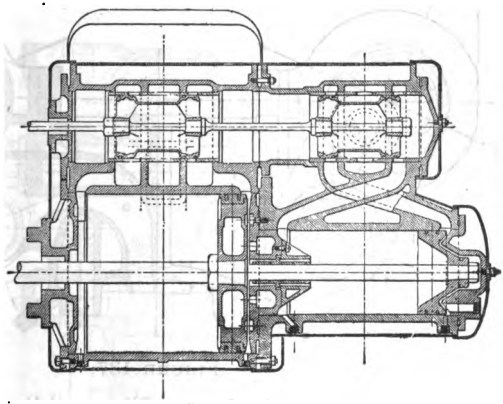

FIGURE 136

Cylinders. The general arrangement of cylinders and of pistons and valves is shown in Fig. 136, in which the high-pressure cylinder is forward of the low-pressure cylinder, with both pistons on the same rod. The steam chest is common to both high and low-pressure cylinders, being open from end to end and serving the purpose of a receiver.

The valves are hollow and permit an unrestricted flow of steam through the steam chest. There being no receiver pipe on these engines, the smoke-box is fitted up with steam pipes and exhaust pipe exactly the same as in simple engines.

Piston Valves. On the high-pressure cylinders the valves are arranged for internal admission, and on the low-pressure cylinders for external admission. An examination of Fig. 136 will show that this design of valves allows steam to be admitted to the same side of each piston by means of the crossed ports on the high-pressure cylinder, the valves being shown as admitting steam.

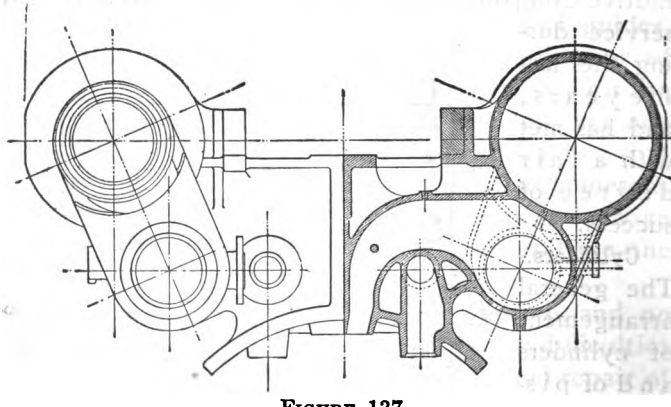

FIGURE 137

Low-Pressure Cylinders. The saddle and cylinders are shown in Fig. 137 in front view and vertical section, in which the coring is shown for steam and exhaust passages. The saddle has an opening cored into the steam-pipe passage, extending from front to back on each side, where there is a circular flange for connection to the short length of steam pipe which extends from front of saddle to the high-pressure cylinder. Coring this passage through from end to end of saddle makes the cylinders interchangeable for use on either side.

Starting Valve. To work the engine, simple or com-

pound, at will, the starting valve shown in Fig. 138 is used, this valve being secured to the side of steam chest over the high-pressure cylinder, and having direct communication with the steam passages into that cylinder. The by-pass valves for the high-pressure cylinders are also contained in the casing of this starting valve and are worked in connection with the latter.

By-Pass Valves. For the purpose of relieving the low-pressure cylinder of excessive pressure when

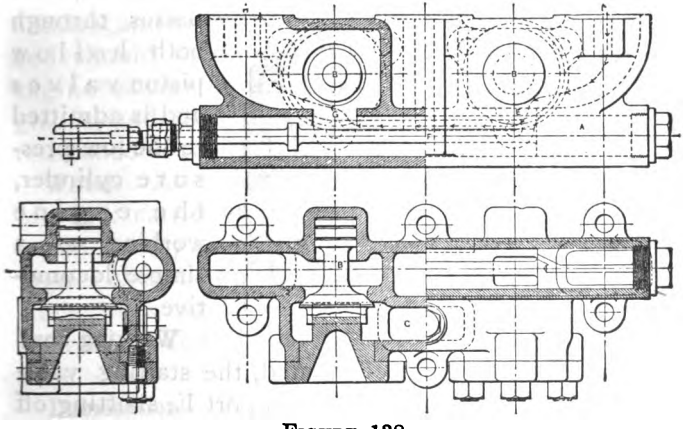

FIGURE 138

working steam, or freeing the same cylinder from back pressure when drifting, the by-pass valves shown in Fig. 139 are used. These by-pass valves are bolted to the side of the steam chest near each end of low-pressure cylinder, and furnish communication between the steam chest and steam ports in cylinder.

Operation, Working Simple. To start the locomotive simple—that is, to admit live steam directly to the low-pressure cylinders—the starting valve A is placed

in position shown in Fig. 138 by means of a lever in the cab. Steam is admitted to high-pressure steam chest through the short steam pipe connecting saddle and chest, and passes through ports D and H, which register with the high-pressure steam ports in steam chest. From D the steam is admitted to ports E and G, and passes around the by-pass valves B, B, into port H, the valves B, B, being held up to their seats by pressure from below through port C, which opens directly into the steam chamber of chest. Steam, having access to both high-pressure steam ports, passes through both hollow piston valves and is admitted to the low-pressure cylinder, the engine working as a simple locomotive.

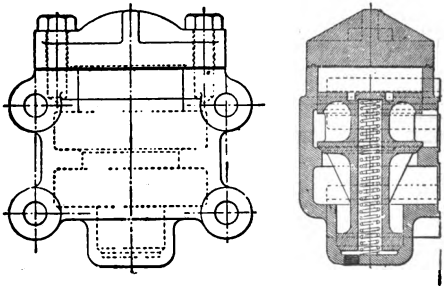

FIGURE 139

Working Compound. When working compound, the starting valve A in Fig. 138 is brought to lap on port E, shutting off high-pressure steam from its passage into the low-pressure end of steam chest. Under these conditions no steam can reach the low-pressure cylinder, except from the exhaust of the high-pressure cylinder.

Drifting. When drifting or not working steam, the by-pass valves B, B, in Fig. 138, being in a vertical position, fall away from their seats by gravity and give a clear opening between the two ends of the high-pressure cylinder. The by-pass valves in Fig. 139 for the low-pressure cylinders are also in a vertical posi-

tion, and are held to their seats by the steam chest pressure when working steam. When running with closed throttle, the by-pass valves (Fig. 139) are raised from their seats by any pressure on the lower side, assisted by the spring under valve. With the valves raised from their seats there is a continuous opening between the two ends of low-pressure cylinder through cylinder steam ports into steam chest, providing relief from back pressure when drifting, by equalizing the pressure in the cylinders.

Starting. Any compound engine will do more economical and satisfactory work operated as a compound, and should therefore never be worked as a simple engine except in starting, or when likely to stall on grades, and then only long enough to overcome the resistance of the train.

Water. Attention should be given to the quantity of water carried in the boiler, with the view of using steam as dry as possible. Water should not be any higher over crown sheet than is necessary for safety, since high water is not conducive to economy in operation, and is also a menace to proper lubrication.

Lubrication. When running under steam the high-pressure cylinder should receive the greater amount of oil. When drifting the reverse should be the rule, the low-pressure cylinder having the more oil.

Breakdowns. When necessary to disconnect the engine on the road, the same methods may be used as with a simple engine, as to removal of parts, blocking of crosshead, etc.

Testing Tandem Compound. The illustrations show sections through steam chests, valves and cylinders, with valves in various positions for testing. (Rules

were formulated by E. P. Roesch, master mechanic, Chicago & Alton Railroad.)

It will be noticed that high-pressure valve A is central or internal admission, while low-pressure valve B is external or end admission. Also notice that ports C and D, leading from high-pressure steam chest E to cylinder F, are crossed. Both valves A and B, and cylinder packings and piston-packing sleeve G, can be tested on each side of engine by simply moving reverse lever. To make tests, place the engine on quarter on side to be tested and proceed in manner designated on following pages.

Testing High-Pressure Valve. Engine on top quarter. Reverse lever in center of quadrant. Starting valve S closed as in Fig. 146. This places both valves A and B in central position, covering all ports on side to be tested.

By opening throttle, steam is admitted to the high-pressure steam chest E, as shown in shade. If steam now flows from either cylinder cock, H or I, the high-pressure valve A is blowing.

Testing Low-Pressure Valve. Engine on top quarter. Reverse lever on center, as in Fig. 140. Starting valve S open, as in Fig. 145.

Remove by-pass valve M in Fig. 145, but replace valve-cap, which is not shown, as it is bolted to under side of starting valve. This allows steam to flow through by-pass from high-pressure steam chest E, through starting valve ports N and O, and past exhaust edges X and Y of high-pressure valve A, into low-pressure steam chest P.

If steam now blows from both low-pressure cylinder cocks K and L, the low-pressure valve B is leaking.

Testing High-Pressure Cylinder Packing. Engine on

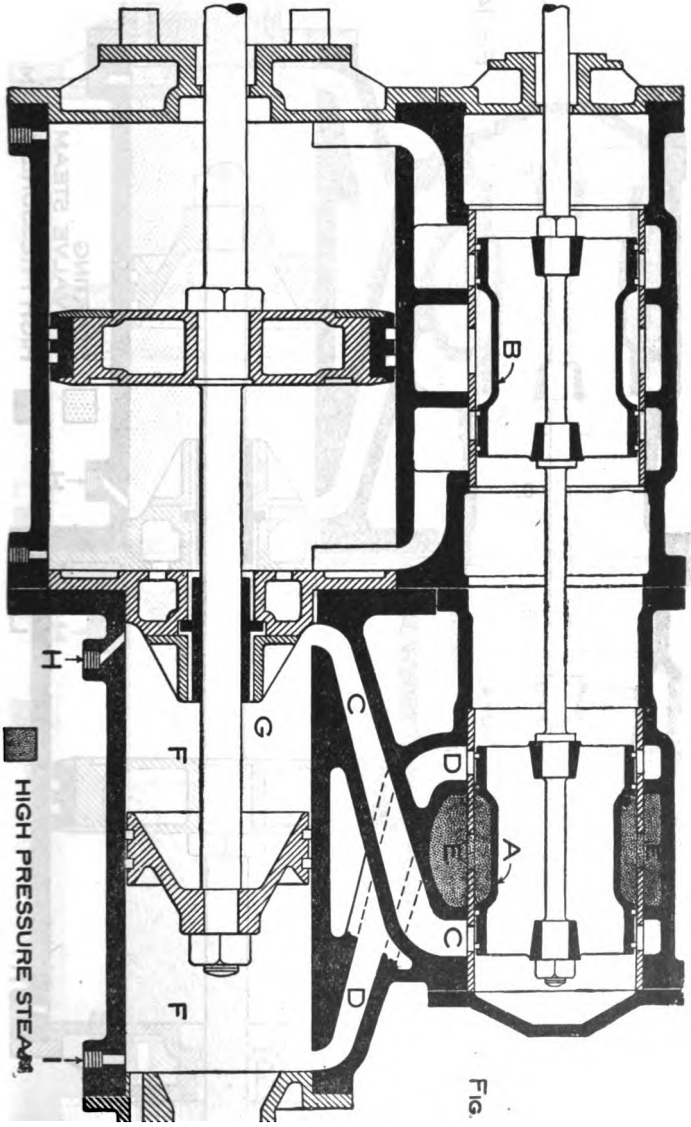

FIG.

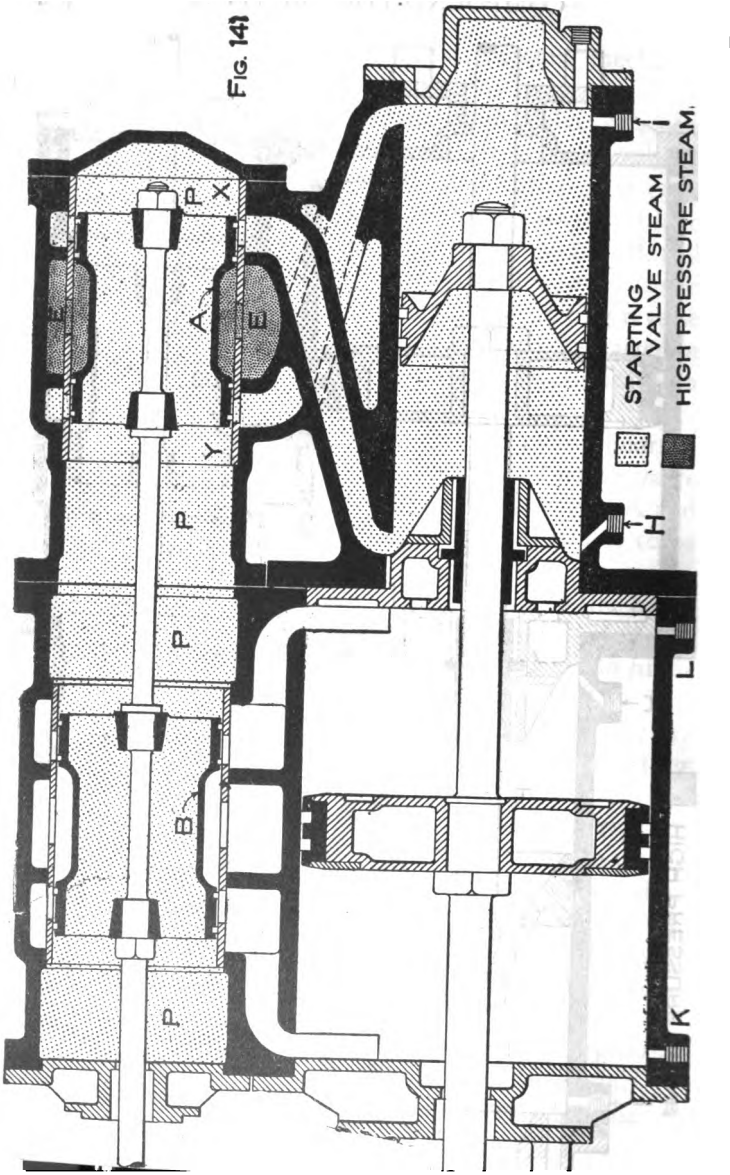

FIG. 141

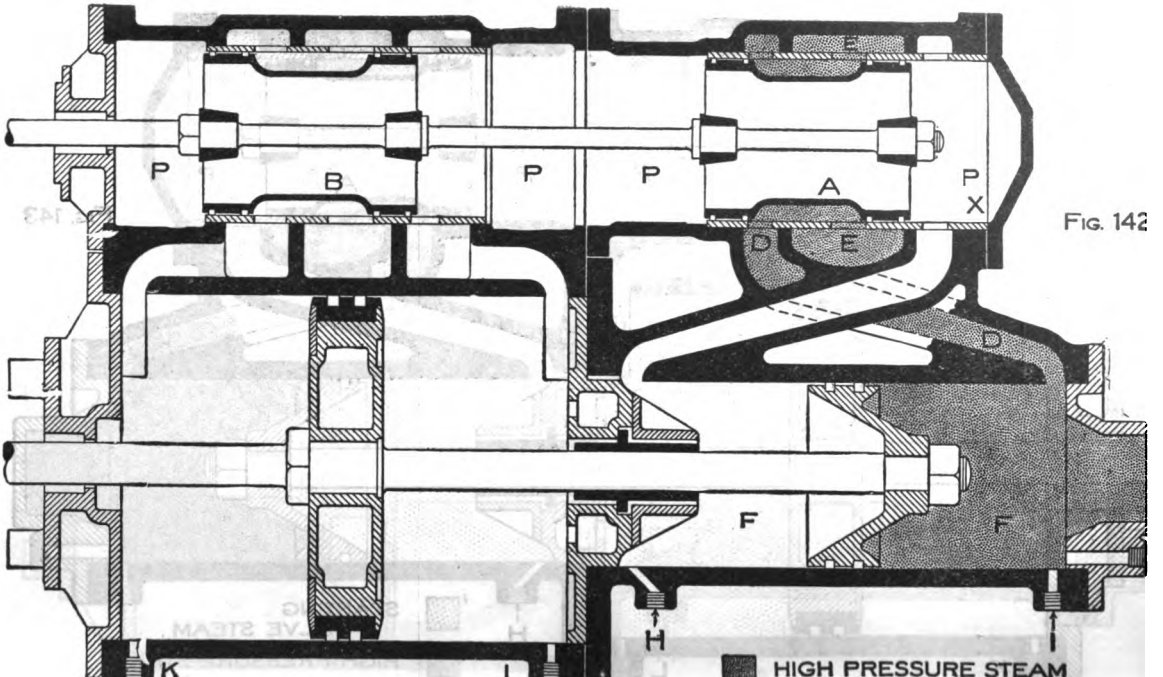

FIG. 142

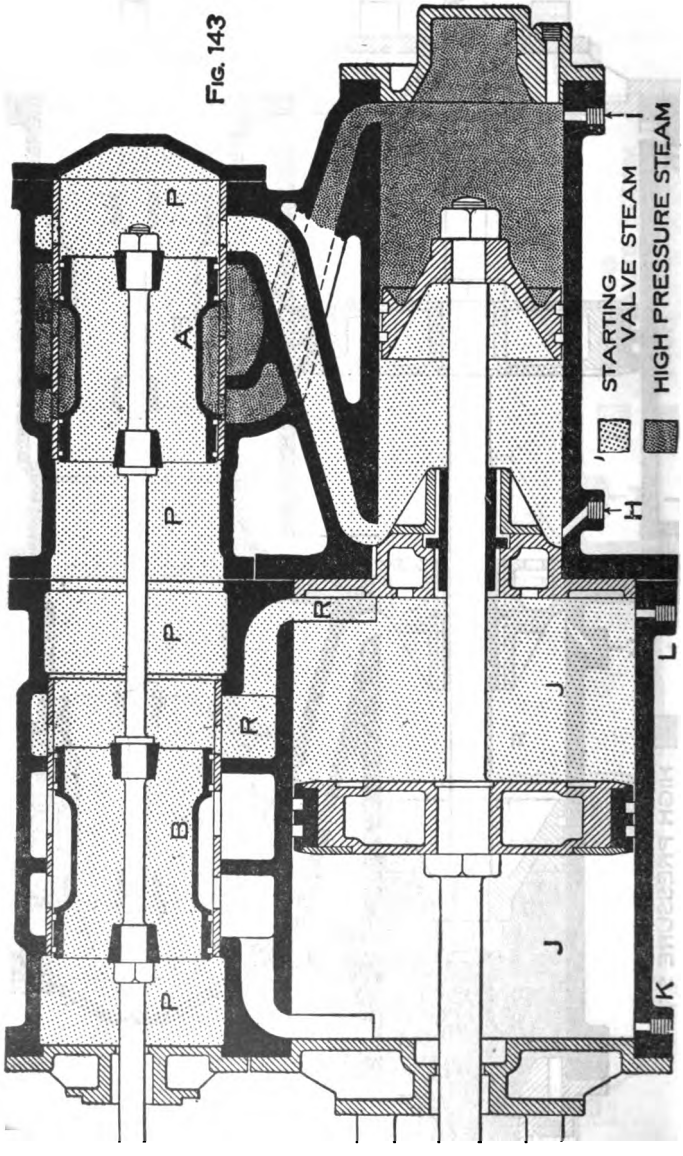

FIG. 143

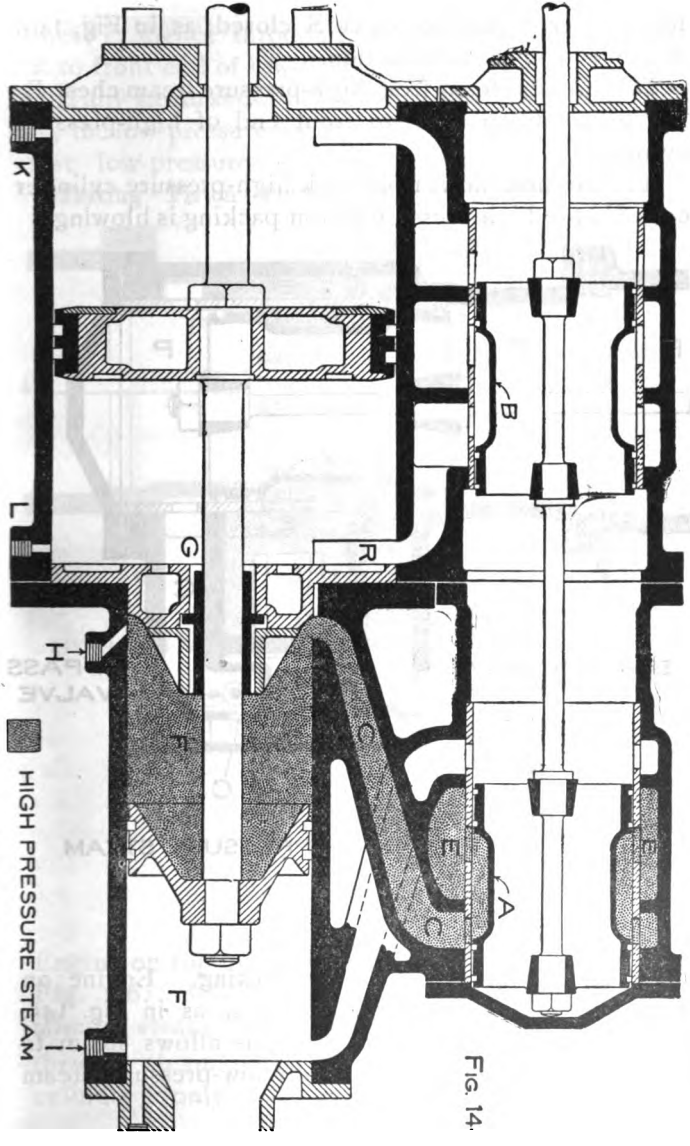

FIG. 14

top quarter. Starting valve S closed, as in Fig. 146. Reverse lever in back motion.

This admits steam from high-pressure steam chest E, through steam port D, to front end of high-pressure cylinder F.

If steam now blows from back high-pressure cylinder cock H, the high-pressure piston packing is blowing.

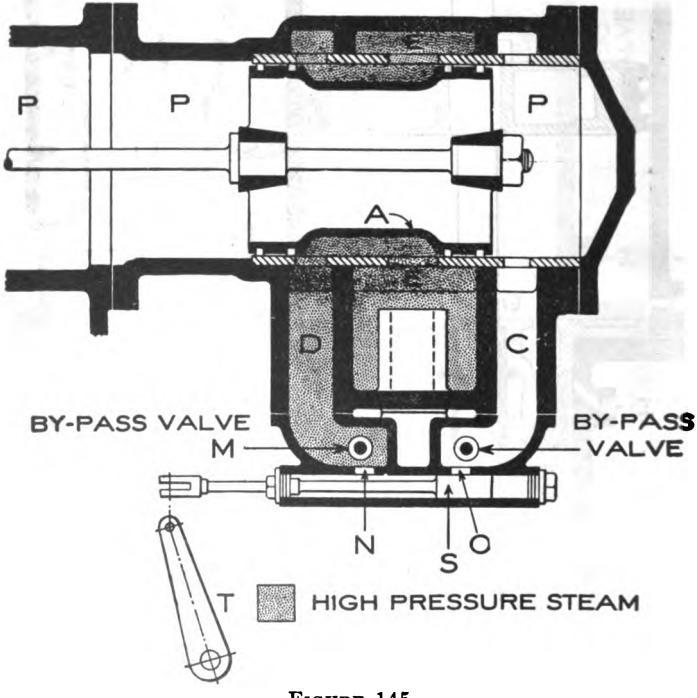

FIGURE 145

Testing Low-Pressure Cylinder Packing. Engine on top quarter. Starting valve S open, as in Fig. 145. Reverse lever in back motion. This allows steam to flow through starting valve into low-pressure steam

chest P, thence through front low-pressure steam port R to front end of low-pressure cylinder J.

If any steam shows at back low-pressure cylinder cock K, the low-pressure piston packing is blowing. Always test low-pressure piston packing in this position.

Testing Piston Packing Sleeve, Between Cylinders.

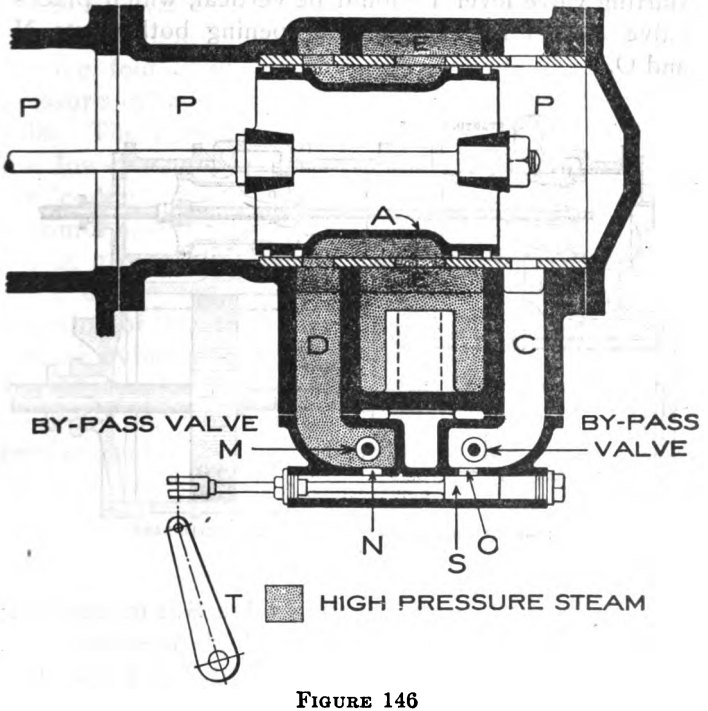

FIGURE 146

Engine on top quarter. Starting valve S closed, as in Fig. 146. Reverse lever in forward motion. This admits steam from high-pressure steam chest E, through steam port C, to back end of high-pressure cylinder F only.

If steam now flows from front low-pressure cylinder cock L, the piston sleeve G is worn and leaking.

Starting Valve in Position for Working Simple. Fig. 145 shows section through high-pressure valve, steam chest and starting valve. By-pass valve M removed, but having valve-cap replaced. For working simple, starting valve lever T should be vertical, which places valve S in forward position, opening both ports N and O.

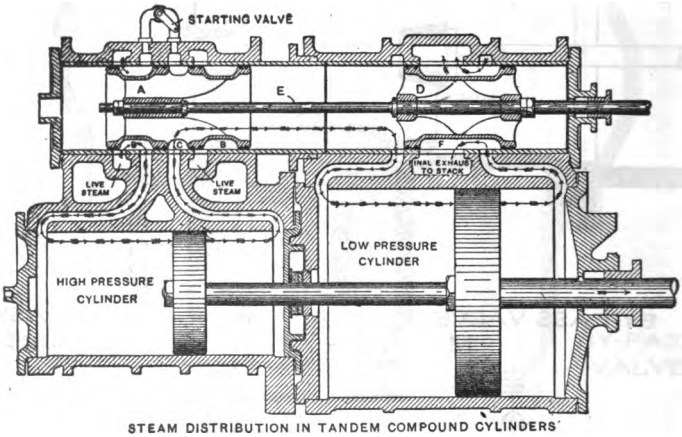

STEAM DISTRIBUTION IN TANDEM COMPOUND CYLINDERS

FIGURE 147

For Fig. 141 test, the starting valve S is in position as shown in Fig. 145, but having high-pressure valve A on center, by-pass valve M removed. For Fig. 143 test, valves A and S are in position as shown in Fig. 145, but having by-pass valve M replaced.

Starting Valve in Position for Working Compound. Fig. 146, same section as Fig. 145. Both by-pass valves in place. Lever T in back position, so starting valve S covers port O.

For Fig. 140 test, starting valve S as in Fig. 146. The high-pressure valve A on center.

For Fig. 143 test, valves A and S in position as shown in Fig. 146.

For Fig. 144 test, starting valve S as in Fig. 146. High-pressure valve A in forward motion.

The Baldwin Tandem Compound. In this type of locomotive, designed in 1902, principally for heavy freight service, four cylinders are used, with a high and low-pressure cylinder and cylindrical valve chest on each side. The high-pressure cylinder is placed in front of the low-pressure, both having the same axis; that is, the center of the low-pressure cylinder extended becomes also the center of the high-pressure.

Fig. 147 is a sectional elevation of the cylinders, valve chests and valves. The arrows show the distribution of the steam.

Each cylinder with its valve chest is cast separately and is separate from the saddle. The steam connections are made by a pipe from the saddle to the high-pressure valve chest, and the final exhaust takes place through an adjustable connection between the low-pressure cylinder and the saddle casting. The valve, which is double and hollow, admits steam to the high-pressure cylinder, and at the same time distributes the high-pressure exhaust from the front end of the high-pressure cylinder to the back end of the low-pressure cylinder or vice versa, as the case may be, without the necessity of crossed ports. As shown in the accompanying diagram, Fig. 147, A is the high-pressure valve by which steam is conducted from the live-steam openings through external cavities B and B to the high-pressure cylinder. The exhaust from the high-pressure cylinder passes through the opening C

to the steam chest, which acts as a receiver; D is the low-pressure valve connected to the high-pressure valve by valve rod E. This valve in its operation is similar to the ordinary slide valve. The outside edges control the admission, and the exhaust takes place through the external cavity F. The starting valve connects the live-steam ports of the high-pressure cylinder

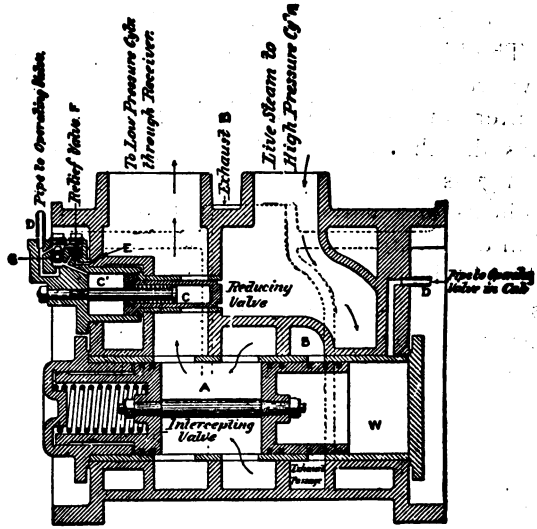

FIGURE 148

The Cross Compound. The cross compound locomotive has two cylinders, one on each side, with an intercepting valve, so arranged that the engineer can work the engine either simple or compound. When the engine is worked as a simple engine, the pressure of the steam that is admitted to the low-pressure cylinder is controlled by an automatic reducing valve in

such a manner that it shall bear the same ratio to the pressure of steam admitted to the high-pressure cylinder as the volume of the high-pressure cylinder bears to the volume of the low-pressure cylinder. Unequal strains are thus avoided. As previously stated, a compound locomotive should never be worked as a simple engine, except in starting a heavy train, or when there is danger of getting "stuck" on a heavy up grade.

The Baldwin Two-Cylinder Compound. The essential features of this design, brought out in 1898, are the intercepting and the reducing mechanisms. These, when in normal position, permit the locomotive to operate by single expansion, and so continue until changed to compound. The engine is therefore readily started at any position of the crank.

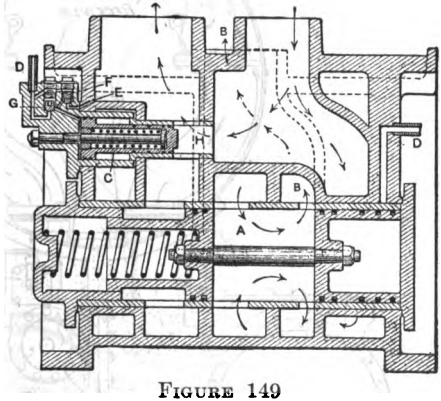

FIGURE 149

In the diagrams, Figs. 148 and 149, A is a double piston intercepting valve, located in the saddle casting of the high-pressure cylinder. In one direction the movement is controlled by a spiral spring, in the other by steam pressure. The function of the intercepting valve is to cause the exhaust from the high-pressure cylinder to be diverted, at the option of the engineer, either to the open air when working single expansion,

or to the receiver when working compound. C is a reducing valve, also placed in the saddle casting of the high-pressure cylinder, and like the intercepting valve is moved in one direction by a spiral spring, and in the opposite direction by steam pressure. The function of this valve is, in its normal position, to

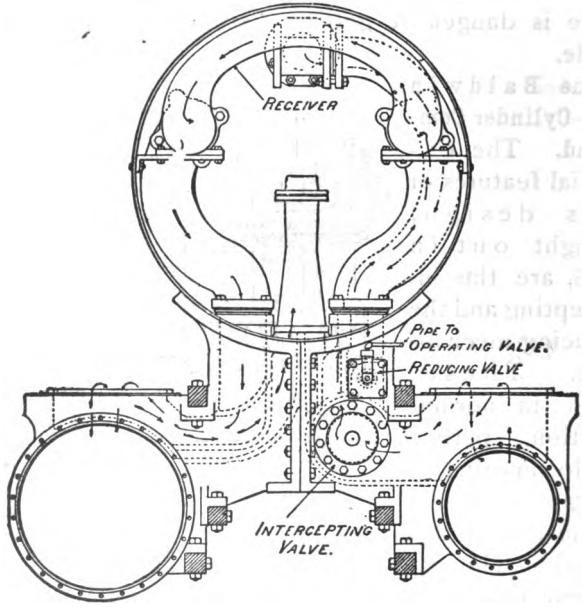

TWO-CYLINDER COMPOUND. CROSS-SECTION
FIGURE 150

admit live steam into the receiver at reduced pressure while the locomotive is working single expansion. When the engine is working compound, this valve automatically closes, as it is evident that there is no further need of live steam in the receiver.

A further function of the reducing valve is to regu-

late the pressure in the receiver so that the total pressure on the pistons of the high and low-pressure cylinders may be equalized.

The steam for controlling the operation of both intercepting and reducing valves is supplied through pipes D from the operating valves in the cab. When not permanently closed by pressure in the pipes D, the

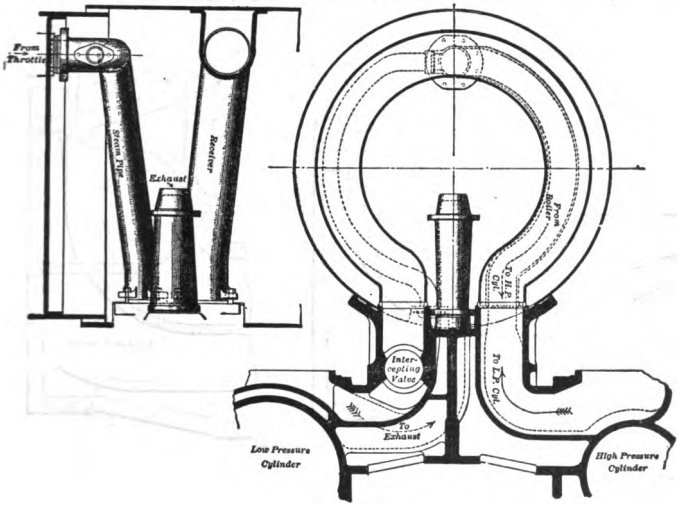

FIGURE 151

reducing valve C is operated automatically by the pressure in the receiver. To this end the port E is provided, communicating with the receiver, and the space in front of the reducing valve; as the pressure rises the steam acts on the large end of the reducing valve, causing it to move backward and close the passage H, through which steam enters the receiver, and thus prevent an excess pressure of steam in the low-pressure cylinder.

Poppet valves F and G are placed in connection with port E, one to prevent the escape of steam from the receiver to pipe D when the locomotive is working single expansion, and the other to close the passage from pipe D to the receiver when working compound. Normally the lever of the operating valve in the cab is in the position marked "simple." In this position no steam is allowed to enter the pipes D, and no pressure

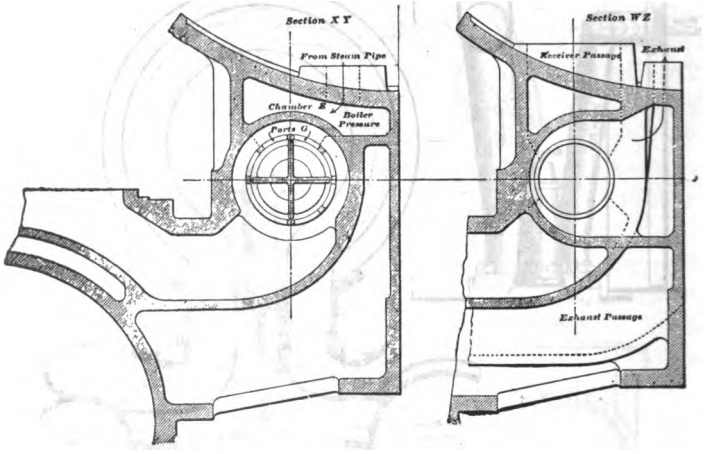

FIGURE 152

will be exerted on the intercepting and reducing valves in opposition to the springs, and they will assume the positions shown in Fig. 148.

The ports of the intercepting valve A stand open to receive the exhaust steam from the high pressure cylinder, and deliver it through the exhaust passage B to the atmosphere.

The reducing valve is open, admitting live steam through passage H to the receiver, and from thence to the low-pressure cylinder.

The receiver pressure is governed by the automatic action of the reducing valve, as previously explained. In this way the engine can be used single expansion in making up and starting trains, for switching and slow running.

At the will of the engineer the operating valve in the cab is moved to the position marked "compound." This admits steam to the pipes D, and through them to the valve chambers W and C^1, changing the intercepting and reducing valves instantly and noiselessly to the positions shown in Fig. 149. The exhaust from the high-pressure cylinder is diverted to the receiver, the admission of live steam to the receiver is stopped by the closing of the passage H, and the locomotive is in position to work compound.

Both valves are of the piston type, with packing rings to prevent leakage. This insures an easy movement of the valves, and prevents the hammering action common to valves of the poppet type when automatically operated.

Schenectady Cross Compound. The American Locomotive Company kindly furnish the following description of the two-cylinder cross compound engine as built at their Schenectady works.

Figure 151. A sectional view through the smoke arch and cylinder saddles, showing the steam passages, receiver, and the location of the intercepting valve in the low-pressure cylinder saddle.

Fig. 152. A transverse section through the low-pressure cylinder saddle XY and WZ. Section XY shows the passages for admitting live steam into the low-pressure cylinder, and section WZ the outlet passage from separate exhaust valve to the exhaust pipe.

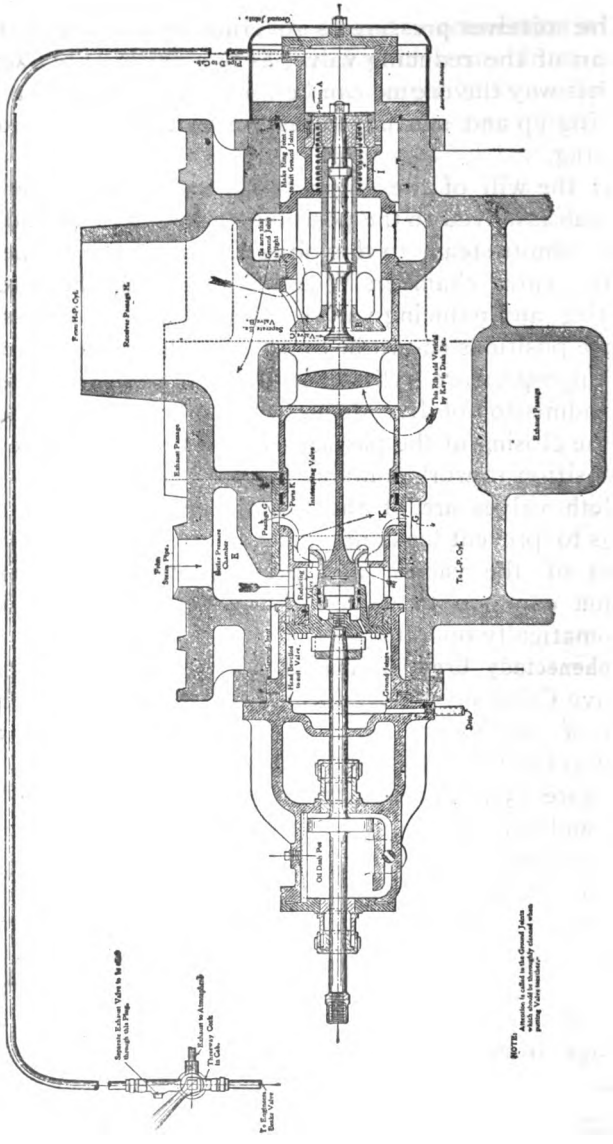
Exhaust Passage
Exhaust Passage
Oil Drain Pot
Ground Joint
Ground Joint
Ground Joint

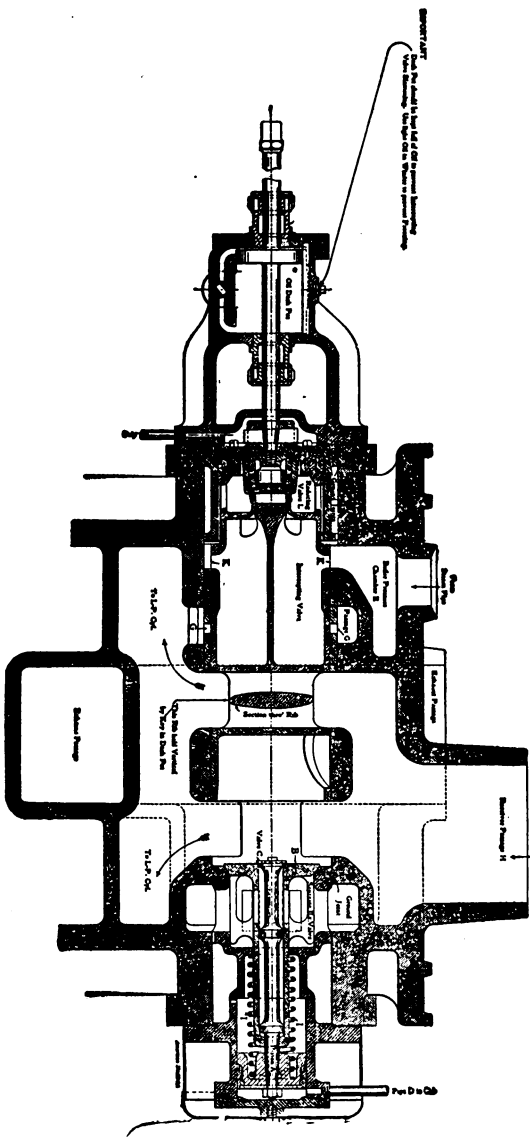

FIGURE 154

Fig. 153. A vertical section through the low-pressure cylinder saddle and intercepting valve, showing the intercepting and separate exhaust valves in the position taken when engine is working simple.

Fig. 154. The same section as Fig. 153, but shows the position of the intercepting and separate exhaust valves, when the engine is working compound. With the arrangement of valves shown in these figures the engine can be started and run either compound or simple, and can be changed from compound to simple, or from simple to compound, at the will of the engineer.

General Description. As the throttle is opened, steam from the boiler, through the dry pipe, is admitted directly to the high-pressure steam chest, and at the same time to chamber E, surrounding the reducing valve L, Figs. 153 and 154.

The exhaust from the high-pressure cylinder, by means of the receiver pipe, passes to chamber surrounding the intercepting valve, and thence to the low-pressure steam chest when working compound, intercepting valve in position shown in Fig. 154, or to the atmosphere, through separate exhaust valve and stack, when working simple, valve in position shown in Fig. 153.

The low-pressure exhaust passes directly to the stack at all times.

The intercepting valve opens and closes the connection between the two cylinders.

The separate exhaust valve opens and closes the connection between the high-pressure cylinder and the atmosphere.

The function of the reducing valve, which operates only when the engine is working simple, or starting

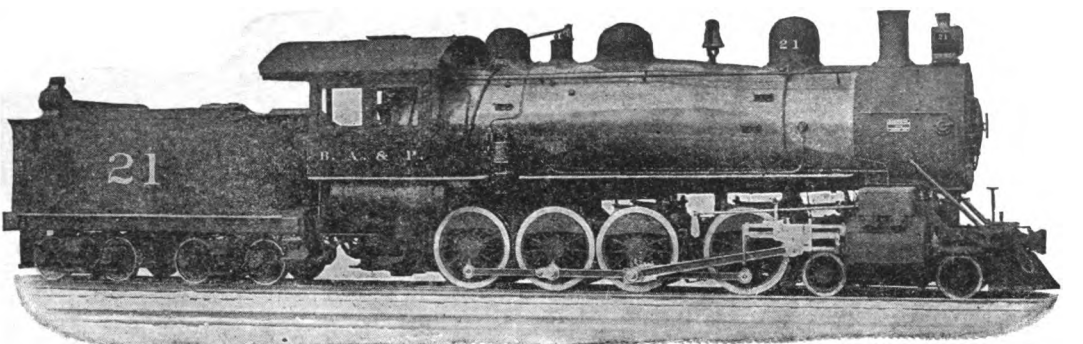

SCHENECTADY 2-CYL. COMPOUND, BUILT FOR THE BUTTE, ANACONDA AND PACIFIC RAILWAY

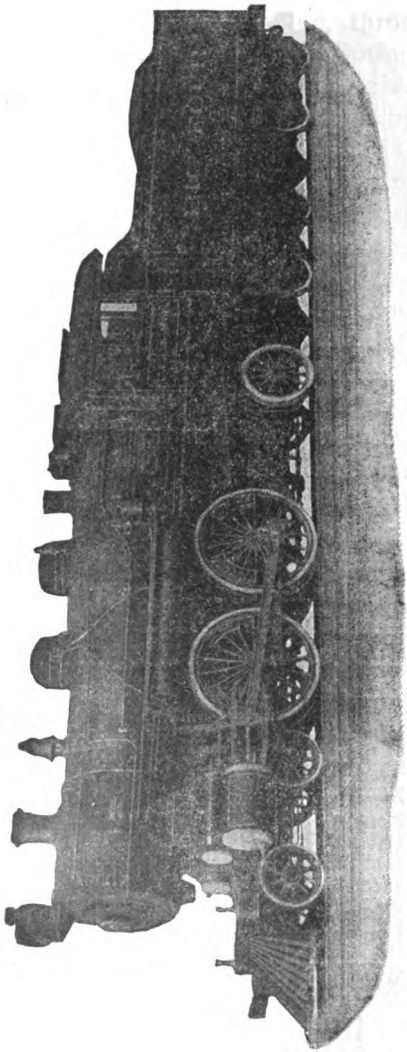

PASSENGER LOCOMOTIVE, BUILT FOR CLEVELAND, CINCINNATI, CHICAGO AND ST. LOUIS RAILWAY

is to control the admission of steam from the boiler to the low-pressure cylinder, in order that the pressure of steam admitted to the low-pressure cylinder shall have the same ratio to the steam in the high-pressure cylinder as the volume of the high-pressure cylinder is to the volume of the low-pressure cylinder.

The oil dash pot insures a steady movement of the intercepting valve.

The intercepting and reducing valves operate automatically by means of the steam pressure acting on the difference of areas of the ends of the valves. The movement of the reducing valve is cushioned by the small air dash pots shown. The separate exhaust valve is operated by the engineer, by means of a three-way cock in the cab. To open the separate exhaust valve, the handle of the three-way cock is moved to the position provided for admitting pressure against the piston A, Fig. 153. Moving the handle in the opposite direction relieves the pressure against A, and the spring, which is shown in the figure, shuts the valve. The separate exhaust valve can be so connected as to operate either by air or steam.

Operation, Starting Simple. The handle of the three-way cock in the cab is moved by the engineer so as to admit pressure through the pipe D against the piston A, forcing it and the valves B and C to the position shown in Fig. 153. As the throttle is opened, steam is admitted directly from the boiler into the passage E, forcing the intercepting valve into the position shown (Fig. 153), thence the steam passes through the intercepting valve by the ports K K, and the passage G G, through the reducing valve to the low-pressure steam chest; at the same time steam from the boiler is admitted directly, by means of the steam pipe, to the

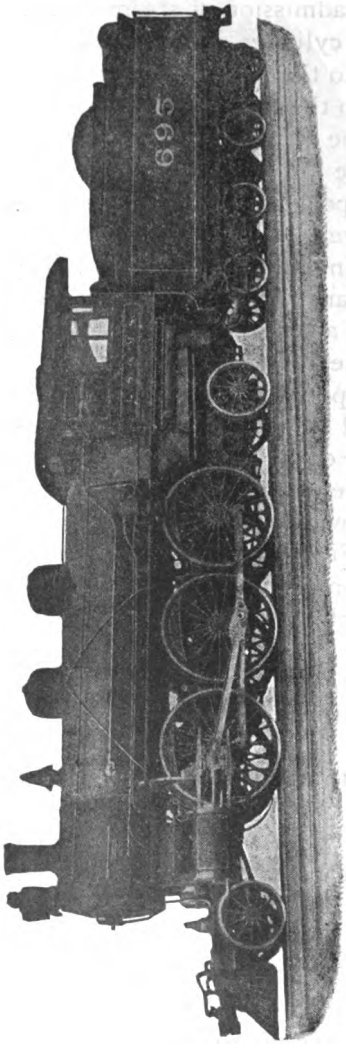

PASSENGER LOCOMOTIVE, BUILT FOR LAKE SHORE AND MICHIGAN SOUTHERN RAILWAY

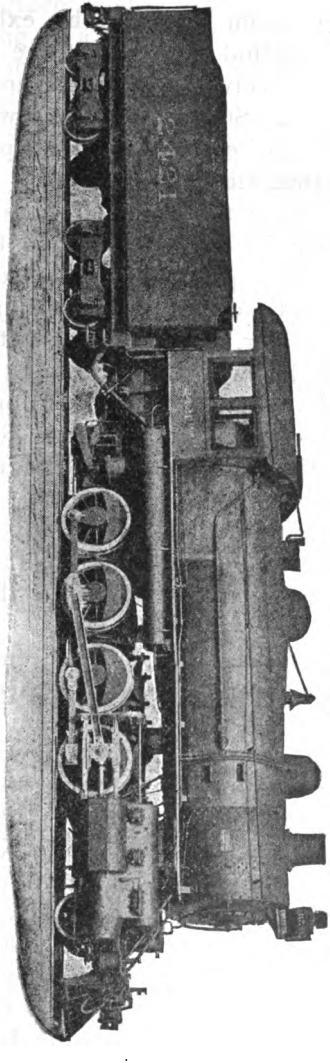

TANDEM COMPOUND, BUILT FOR N. Y. C. AND H. R. R. R.

high-pressure steam chest. The exhaust from the high-pressure cylinder passes to the atmosphere by means of the receiver passage H and the separate exhaust valve B. Steam from the low-pressure cylinder is exhausted directly to the atmosphere.

To Change from Simple to Compound. Having started simple, to change to compound, the handle of the three-way cock in cab is turned so that pressure is released from the piston A. The separate exhaust valve will then be closed by the spring I. The pressure in the receiver, due to the exhaust from the high-pressure cylinder, will rise and force the intercepting valve to the left, that is, to the position shown in Fig. 154, thereby opening the passage for the exhaust steam, from the high-pressure cylinder, through the receiver, to low-pressure steam chest. The movement of the intercepting valve to the left also closes the passage G G, thereby shutting off the admission of steam directly from the boiler to the low-pressure steam chest.

Starting Compound. To start the engine compound the separate exhaust valve is left closed as in Fig. 154. As the throttle is opened the steam pressure in the passage E will force the intercepting valve to the right or to the closed position; at the same time steam directly from the boiler will be admitted to low-pressure steam chest through ports K K and passage G G. The high-pressure cylinder will exhaust into the receiver until the pressure is sufficient to force the intercepting valve to the left, as shown in Fig. 154, when the engine will work compound. The change to compound working takes place at from one-half to three-quarters of a revolution of the driving wheels.

Compound to Simple. With the engine working com-

pound, if the engineer wishes to run the engine simple to prevent stalling on a heavy grade, the handle of the three-way cock should be placed in same position as for starting simple. This opens first the small bleeding valve C, Figs. 153 and 154, and then the separate exhaust valve. The bleeding valve relieves the pressure and thus permits the main valve B to be operated more easily. As soon as the separate exhaust valve is open, the pressure in the receiver drops and the intercepting valve is forced against the seat to the right, by means of the pressure in chamber E, and the engine works simple as before. Engines should be worked simple no longer than absolutely necessary.

Lubrication. A pipe from the sight feed lubricator located in the cab leading directly to chamber E is provided, by means of which both the intercepting and reducing valves are lubricated. One drop per minute is sufficient for these parts. A small oil cock in three-way cock, located in cab, provides for lubricating the separate exhaust valve and attendant parts, and oiling once a day with a small quantity of cylinder oil provides sufficient lubrication.

When using steam it is good practice to feed about two-thirds of allowance of cylinder lubrication to H.-P. cylinder. When drifting down long grades this should be reversed, on account of the larger surface to be lubricated on L.-P. side. Always run with lubricator steam valve wide open.

By-Pass Valves. Some of the compound locomotives recently built are equipped with by-pass valves, provided to admit of engines drifting more freely. These valves, more particularly on the low-pressure side, should be examined occasionally, by removing the cap, to insure that they are in good working order.

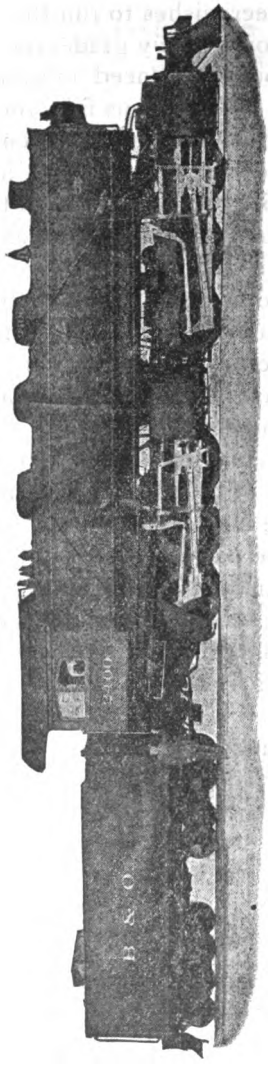

FOUR CYLINDER ARTICULATED COMPOUND, BUILT FOR BALTIMORE AND OHIO R. R.
HEAVIEST AND MOST POWERFUL LOCOMOTIVE EVER BUILT

On new engines the by-pass valves should be cleaned frequently, as their free movement is liable to be hindered by gumming or the presence of core sand.

Should a by-pass valve become broken or in any way defective, take off the valve body and insert a blind gasket between it and the cylinder.

Carrying Water. Most of the later compound locomotives are equipped with piston valves, and it is very necessary that the cylinders should be kept free from water. Great care should be taken to open cylinder cocks when starting and before opening throttle after drifting down grade. Careful attention should also be given to avoid carrying water too high in boiler. Carrying water high in the boiler, and thus causing wet steam in cylinders, is injurious to compound locomotives, no matter whether slide valves or piston valves are used.

Oil Dash Pot. This should be kept full of oil, to prevent intercepting valve from slamming. Breakages of intercepting valves are nearly always due to neglect of this rule.

Dash pots should be filled with common car or engine oil, thinned with kerosene when necessary, in winter.

The dash pot stuffing boxes should be kept packed, to avoid leakage of oil.

Drifting. In drifting, the three-way cock should be in simple position whenever it can be done without too much loss of air by leakage of separate exhaust valve or piping. Most of the recent compound locomotives are provided with a small drifting valve, in main throttle valve, so arranged that it can be opened with a slight movement of the throttle lever. It is considered good practice to admit a little steam to cylinders when drifting, through this valve, or, if not provided

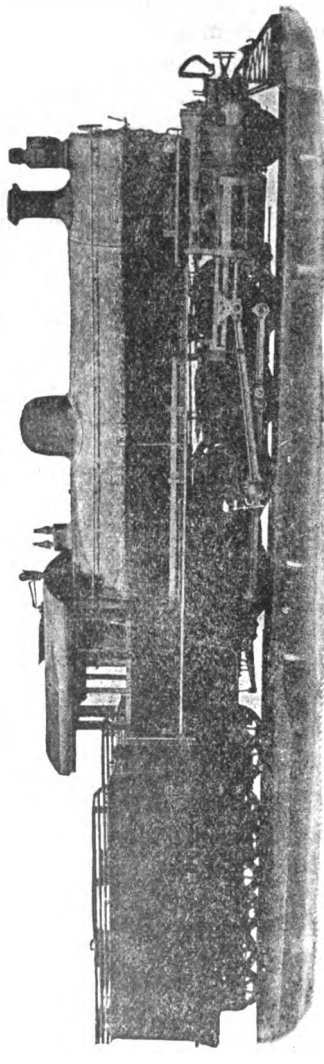

TANDEM COMPOUND, BUILT FOR CAPE GOVERNMENT RAILWAYS, SOUTH AFRICA

with a small drifting valve, by a slight opening of main throttle.

Examination. Enginemen should ascertain if separate exhaust valve is in good working condition before starting out with train, by trying the engine simple and compound before coupling to the train. The separate exhaust valve should be examined at intervals, so that the spring and other parts are kept in proper condition. Should the engine refuse to move after the throttle is opened, it will usually be found that it stands on center on high-pressure side (in position to take steam on low pressure side), and it will be due to either the intercepting or reducing valve sticking, which is always the result of lack of lubrication for intercepting valve, or carrying too much water in the boiler. Which of these valves are sticking can be ascertained from the position of the intercepting valve stem. In starting the engine, if the intercepting valve stem extends clear out about 7 in., it would be the intercepting valve, and unless some of the ports are broken a slight tap on the end of the stem, with throttle open, would send it ahead. If it was found that the stem had already moved ahead so that it extended out about 3 in., it would be the reducing valve. Usually one or two sharp blows on the intercepting valve back head, with throttle open, will loosen it. In either case live steam would then be admitted to low-pressure cylinder for starting.

Should the engine refuse to work compound after the three-way cock had been placed in compound position, and continue to work as a simple engine, it would indicate that the separate exhaust had not closed. This trouble can usually be traced to enginemen using engine oil for lubricating separate exhaust

valve chamber, and can sometimes be overcome by a dose of kerosene, which should in all cases be followed up with valve oil.

Relief Valves. Combined pressure and vacuum relief valves on low-pressure steam chest and single-pressure relief valves on low-pressure cylinder heads should be set at 45 per cent of the boiler pressure, and the high-pressure cylinder head relief valves set at 20 lbs. above boiler pressure.

Dampers. Dampers should be closed when drifting down long grades.

QUESTIONS

381. What is the principal object in the compounding of locomotives?

382. Name two sources of economy in compound engines.

383. Why is there a constant loss of heat in the single cylinder engine?

384. How is the expansion of the steam divided in the compound locomotive?

385. How should the cylinders of a compound engine be proportioned regarding size?

386. What other problems are before the designers of compound locomotives?

387. How many types of compound locomotives are in use in this country?

388. Describe briefly the Vauclain compound.

389. What kind of an engine is the balanced compound?

390. How are the cylinders of the tandem compound located?

391. How many cylinders has the cross compound?

392. What kind of valve gear is used on compound locomotives?

393. What were some of the objects aimed at in designing the Vauclain compound?

394. How many and what type of valves are used on the Vauclain compound?

395. What kind of packing rings are used on this valve?

396. When is the Vauclain valve motion direct acting?

397. When is it indirect?

398. In setting these valves, what ports are to be considered?

399. Of what material are the pistons made?

400. In starting these engines with full trains, what is necessary?

401. How is this accomplished?

402. What is the starting valve, and what is its function?

403. How is it operated?

404. What rule should be observed regarding this valve?

405. What provision is made for taking care of water that finds its way into the cylinders?

406. What is the first thing an engineer should learn, in the operation of a compound locomotive?

407. How is the quadrant of the Vauclain compound made, with reference to point of cut-off?

408. What rules should be observed when starting the Vauclain compound?

409. When should the reverse lever not be hooked up?

410. Should the starting device be used when the train is in motion?

411. When is it allowable to use the starting device while the train is in motion?

412. How should the fire be carried in the Vauclain compound?

413. Where is the most economical point of cut-off for a single expansion engine?

414. Where is the most economical point of cut-off for a compound locomotive?

415. What should be done when starting the Vauclain compound?

416. What should be done with the reverse lever as the speed of the engine increases?

417. What should be done on a slightly descending grade?

418. What should be the position of the starting valve lever, when throttle is closed?

419. If there is danger of stalling on a heavy upgrade what should be done?

420. What is one of the legitimate advantages of the compound locomotive?

421. What advantage has the boiler of a compound locomotive over the boiler of a simple engine?

422. What is the ideal type of engine, whether stationary or locomotive?

423. How may this ideal be reached?

424. What has always been a serious problem for locomotive builders?

425. How are the cylinders of the Baldwin balanced compound located?

426. What type of valve is used on these engines?

427. Where are the valves located?

428. Where are the high-pressure cylinders located?

429. At what angle are the cranks set?

430. Describe briefly the action of the steam in this engine.

431. How are the cylinders of the American Locomotive Company's balanced compound located?

432. How is a uniform turning moment attained in this engine?

433. Mention the advantages that the balanced compound possesses over other types of compound locomotives.

434. Why does the tandem compound appear to be the ideal locomotive?

435. What is one of the main objections to this type of compound locomotive?

436. What kind of handling does a compound engine require?

437. What knowledge is necessary for the engineer in order that he may successfully operate a compound engine?

438. What can be said regarding the tandem compound built by the American Locomotive Co.?

439. How are the valves arranged on this engine?

440. What is the function of the starting valve?

441. How should a compound locomotive be lubricated?

442. How are the cylinders placed in the Baldwin tandem compound?

443. What about the cylinders and valve chests of this engine?

444. What kind of a valve has this engine?

445. How many cylinders has a cross compound, and how are they located?

446. What is the purpose of the intercepting valve?

447. What is the function of the automatic reducing valve?

448. How is the steam for operating these valves supplied?

449. How is the receiver pressure governed?

450. What are the by-pass valves for?

451. What precautions should be observed regarding water on these engines?

452. What about the oil dash pot?

453. What should be done when drifting?

454. What should be done with the separate exhaust valve?

455. Should the engine refuse to move when the throttle is opened, what would be the probable cause?

456. How may it be ascertained which one of these valves is stuck?

457. How may the stuck valve be loosened?

458. In what position should the dampers be when drifting?

CHAPTER IX

INJECTORS, STEAM GAUGES, POP VALVES AND OTHER FITTINGS

Injectors. The proper method of feeding water to a boiler while in operation under a high pressure, is a problem that demands the constant and earnest attention of the engineer, not only as a matter of personal safety, but the efficiency of the boiler depends in a large measure upon the manner in which the feed water enters the boiler. Theoretically the supply should just equal the demand at all times; that is to say, there should be a constant ingoing of water into the boiler during all the time that the fire is active, and the volume of water entering the boiler should exactly equal the volume of water that is being evaporated within the boiler. But these conditions are hardly possible in practice. Especially is this so in locomotive practice, where the service differs so greatly from marine or stationary service. The judicious use of the injector on a locomotive is a subject that engineers and firemen should study to familiarize themselves with.

The importance of this matter is shown in the following extract from the report of a committee of the Traveling Engineers' Association: "It would hardly cut any figure how careful an engineer might be in the handling of his train, with the skill he uses in regulating speed or in the adjustment of the throttle and the reverse lever, if the water was not put into the boiler at the right time and the right place. In our

experience we have known almost remarkable results to be brought about in an engine's fuel performance by explaining this matter to engineers who perhaps had not given it the thought that the subject deserves." It will be noticed that the committee emphasizes the importance of "putting the water into the boiler at the right time and the right place," if economy in fuel is to be attained, and this certainly is a worthy object for every locomotive engineer to have in view at all times.

Now as to the "right time" for putting water into a

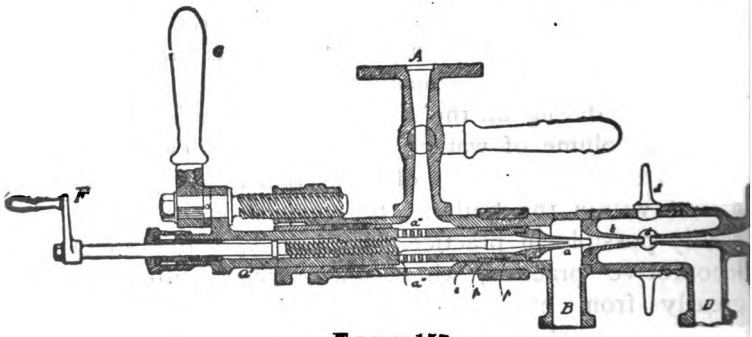

FIGURE 155

ORIGINAL FORM OF THE GIFFARD INJECTOR

locomotive boiler: A good time to use the injector to advantage is while standing at a station. To this end, it is the practice of some engineers when approaching a stopping point, to allow the water level to drop below the normal point, thus utilizing the heat already stored in the water that is in the boiler to enable them to get into the station. When the throttle is closed for making the stop the injector may be started, and much of the heat that would otherwise be wasted at

the pop valve will be utilized in forcing a new supply of water into the boiler. Another "right" time and place to use the injector is just after passing the summit of a long hill, when the throttle can be eased off. This will prevent the pop from rising so freely on the down grade, and thus another source of economy will be taken advantage of. There are many other "right" times and places for using the injector, that an observant and careful engineer will, by a little thinking, be enabled to figure out for himself. Much, of course, depends upon the kind of an injector a man has on his engine. If it has a wide range of capacities, and can be throttled so as to feed a very small jet without breaking, it may be used almost continuously, especially if the track is straight, and there are not very many heavy grades. The modern injector, as it is furnished at the present time by the leading manufacturers, approaches very nearly to being a perfect boiler feeder for locomotives Ever since the time of the invention of the injector in 1858 by that eminent French engineer Henri Giffard, and its introduction into this country in 1860 by Wm. Sellers & Co., of Philadelphia, it has been constantly improved upon, and developed by various inventors and manufacturers, and it is to-day, without doubt, the most simple, the most economical, and the best device for feeding water into locomotive boilers. As a short study of the philosophy of the action of the injector is not only useful, but should be interesting to engineers and firemen, a space will be devoted to this subject. The leading types of injectors and inspirators will also be described and illustrated.

How an Injector Works.* How can an injector lift

*Stricland L. Kneass, C. E., from Sellers' Hand-Book of Injectors.

and force large volumes of water into the boiler, against the same or even higher pressure than that of the steam?"

"An injector works because the steam imparts sufficient velocity to the water to overcome the pressure of the boiler."

This is a statement of fact; to explain the action, we will take up the important parts of the question separately.

Why should an injector work? Let us assume that the boiler pressure is 180 pounds—that is to say, every square inch of the sheets, top and bottom, receives an

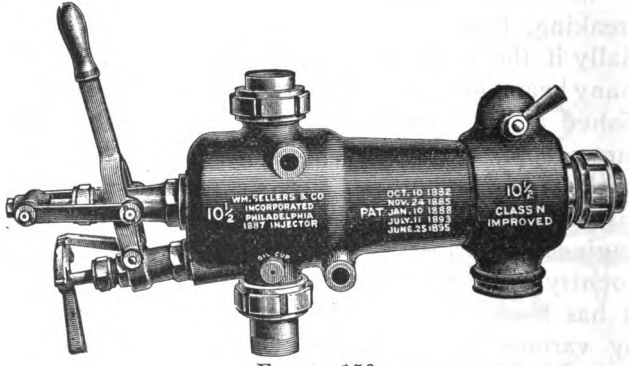

FIGURE 156

THE SELF-ACTING INJECTOR, CLASS N IMPROVED P. R. R. STANDARD

internal pressure of 180 pounds. If the thermometer is placed inside, it is found that both the water and the steam are at the same temperature, 379 deg. But the steam contains more heat than the water, because after water is heated, more coal must be burned to break up the drops of water to change them into steam; this heat is stored in the steam and represents work done by the burning of the coal. Steam not only exerts a pressure of 180 pounds per square inch, but

also can expand eight to twenty-six times its original volume, depending upon whether it exhausts into the air or into a partial vacuum; water under the same pressure would be discharged in a solid jet and without expansion. Either steam or water can be used in the cylinder of an engine or to drive the vanes of a steam or water turbine, but one pound of steam is capable of much more work than one pound-weight of water, on account of the heat which has been used to change it into steam. This is easily seen by comparing the velocities of discharge from a steam nozzle and a water nozzle under 180 pounds pressure; steam would expand while issuing, reaching at the end of the nozzle a velocity of about 3600 feet per second, while the water, having no expansion, would have a velocity of only 164 feet per second, about $\frac{1}{22}$ of that of the steam. The same weight of steam discharging per second would therefore have vastly more power for doing work than the water jet.

If a steam or water jet comes in contact with a body in front of it, the tendency is to drive the body forward. The force which tends to move the body is called "momentum," and is equal to the weight of water or steam discharged by the jet in one second, multiplied by its velocity per second. If 1 pound of both the water and the steam are discharged per second, the "momentum" of the steam jet is 3600; because 1 multiplied by 3600 = 3600; the momentum of the water jet is 164. If the water jet discharged about twenty-two pounds per second, its momentum would be the same as that of the steam, because 22 multiplied by 164 is nearly 3600. The two jets are discharged under the same pressure, but the steam has twenty-two times as much "momentum" or force as

the water jet; it could, therefore, easily enter a boiler at 180 pounds pressure if we could reduce it to the size of the hole of the water nozzle.

How ought an injector to work? Here a practical difficulty is reached. A steam jet 6 in. from the nozzle is much larger than at the opening, and it would appear almost impossible to make it enter a smaller tube. Even at the narrowest part of the nozzle it is more than sixteen times larger in diameter than a

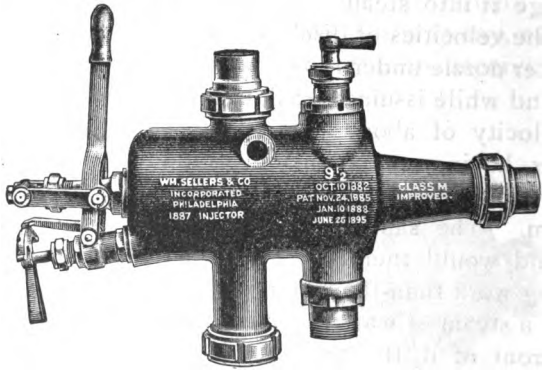

FIGURE 157

THE SELF-ACTING INJECTOR, CLASS M IMPROVED

water jet discharging the same weight per second; therefore, if the steam is changed to water without reducing its velocity, it would pass through a hole one-sixteenth the diameter of the "steam nozzle" at a velocity of 3600 feet per second. The simplest and best way to reduce its size is to condense it, and to use water for this purpose, especially as water is needed in the boiler. To condense the steam and utilize its velocity, the water must be brought into close contact with it, without interfering with the

direct line of discharge; a funnel or "combining tube" suitably placed will compel water to enter evenly all around the steam jet. The mouth of this funnel must not be too large, or too much water will enter and swamp the jet; if too small, insufficient water will enter to condense the steam. The effect of condensing the steam is to reduce the diameter of the jet; therefore the funnel or combining tube must be a smooth, converging taper, to lead the combined jet of water and condensed steam into the smaller hole of the delivery tube. The effect of the impact of the steam is to give the water its momentum, so that a solid stream shall issue from the lower end of the tube. Each little drop of entering water is driven ahead faster and faster by the vast number of little atoms of steam moving hundreds of times as rapidly, until the steam and water thoroughly combine into one swiftly-moving jet of water and condensed steam, which contracts sufficiently in diameter to enter the smaller delivery tube.

Why does the jet enter the boiler? The combined jet now passes from the end of the combining tube into the delivery tube; why does it enter the boiler?

If a pipe shaped like a fire-hose nozzle or a "delivery tube" is connected to a tank or boiler carrying 180 pounds, the water will issue in a solid jet with a velocity of about 164 feet per second; or, if we could force water into the tube at a speed of 164 feet per second at the same part of the tube, this water would enter and fill up the boiler or tank against 180 pounds pressure. Therefore to enter the boiler the combined jet of water and steam issuing from the combining tube must have a velocity of at least 164 feet per second.

Now, what is the velocity of the combined jet at the lower end of the combining tube? If the steam nozzle

discharges one pound per second at 3600 feet velocity, the momentum of the steam is 1 multiplied by 3600, or 3600. If the vacuum caused by the condensation of the steam lifts and draws into the combining tube ten pounds of water per second at a velocity of forty feet, its momentum is 400; and that of the combined jet is 3600 added to 400, or 4000. The weight of the combined jet is eleven pounds, and at the time of entering the delivery tube its velocity ought to be equal to 4000 divided by 11, or 366 feet per second; but as the water and the steam do not meet in precisely the line of discharge there is a loss of momentum, and the velocity in the delivery tube is only 198 feet per second. But the jet only needs a velocity of 164 feet to enter the boiler or tank carrying 180 pounds pressure, therefore the actual jet in the delivery tube is able to overcome a pressure of 206 pounds per square inch, or twenty-six pounds above that of the steam, because the velocity of a jet of water under a head or pressure of 206 pounds would be 198 feet per second. This excess is more than sufficient to overcome the friction of the delivery piping and the resistance of the main check valve. Therefore:

"The action of the injector is due to the high velocity with which a jet of steam strikes the water entering the combining tube, imparting to it its momentum and forming with it during condensation a continuous jet of smaller diameter, having sufficient velocity to overcome the pressure of the boiler."

The Sellers Improved Self-acting Injector. *Description.* This injector is simply constructed and contains few operating parts. The lever is used in starting only, and the water valve for regulation of the delivery. It is self-adjusting, with fixed nozzle, and restarts auto-

matically. All the valve seats that may need refacing can be removed; the body is not subject to wear and will last a lifetime.

The action is as follows: Steam from the boiler is admitted to the lifting nozzle by drawing the starting lever (33) about one inch, without withdrawing the plug on the end of the spindle (7) from the central part of the steam nozzle (3). Steam then passes through the small diagonal-drilled holes and discharges by the outside nozzle, through the upper part of the

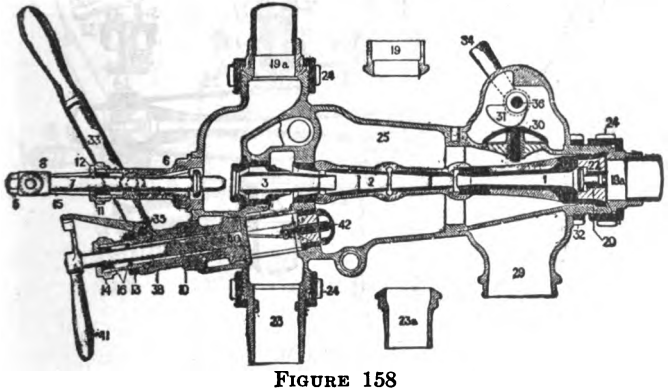

FIGURE 158

THE SELF-ACTING INJECTOR, CLASS N IMPROVED

P. R. R. STANDARD SELLERS STANDARD FORM

combining tube (2) and into the overflow chamber, lifts the overflow valve (30), and issues from the waste pipe (29). When water is lifted the starting lever (33) is drawn back, opening the forcing steam nozzle (3), and the full supply of steam discharges into the combining tube, forcing the water through the delivery tube into the boiler pipe.

At high steam pressure there is a tendency in all injectors having an overflow to produce a vacuum in

the chamber (25). In the Improved Self-Acting Injector this is utilized to draw an additional supply of water into the combining tube by opening the inlet valve (42); the water is forced by the jet into the boiler, increasing the capacity about 20 per cent.

The water-regulating valve (40) is used only to adjust the capacity to suit the needs of the boiler. The range is unusually large.

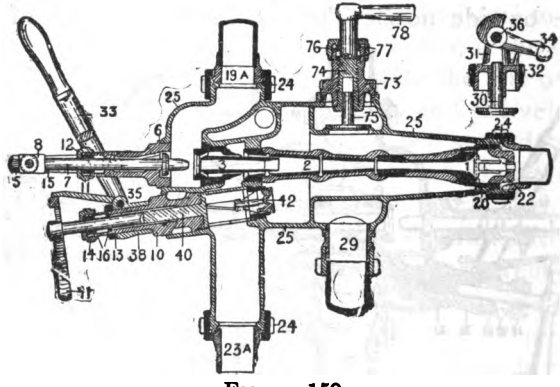

FIGURE 159

SELF-ACTING INJECTOR, CLASS M IMPROVED

SPECIAL FORM, INTERCHANGEABLE WITH MONITOR, OHIO, ETC.

The cam lever (34) is turned toward the steam pipe to prevent the opening of the overflow valve when it is desired to use the injector as a heater or to clean the strainer. The joint between the body (25) and the waste-pipe (29) is not subject to other pressure than that due to the discharging steam and water during starting; the metal faces should be kept clean and the retaining nut (32) screwed up tight.

To tighten up the gland of the steam spindle, push in the starting lever (33) to end of stroke, remove the

little nut (5) and draw back the lever (33). This frees the crosshead (8) and links (15), which can be swung out of the way, and the follower (12) tightened on the packing to make the gland steam-tight.

The Improved Self-Acting Injector is specially adapted to railroad service, as its efficient, positive action and wide range of capacities at 200 pounds steam render its application to high-pressure locomotive boilers very advantageous. It will work from the

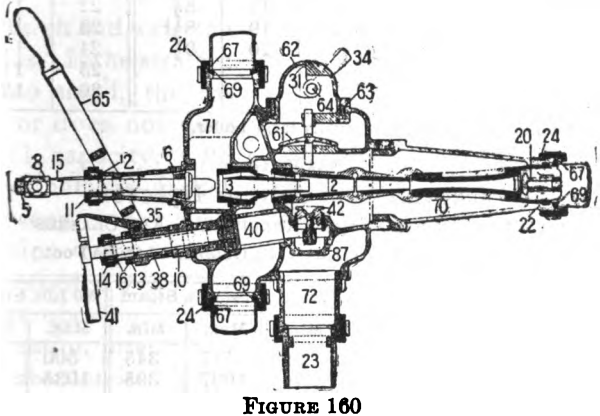

FIGURE 160

SELF-ACTING INJECTOR, CLASS P, SPECIAL 10½ AND 11½ ONLY

highest steam pressures used on locomotives down to 35 pounds steam without adjustment and without wasting at the overflow, and by regulating the water-supply valve on the injector it can be operated at 15 pounds. As it restarts instantly under all conditions of service, it can always be depended upon to force all the water into the boiler, so that the engineer can give his whole attention to his other duties.

Sizes of Injectors for Locomotives.* In determining the size of injector required for locomotives, the size

*From "Practice and Theory of the Injector." Wiley & Sons, New York.

of the cylinder is usually taken as the standard, although the diameter of the boiler and the kind of service for which the locomotive is intended has a modifying influence.

TABLE 17

Diam. of Cyl., inches	Size of Injector	Diam. of Cyl., inches	Size of Injector	Diam. of Cyl., inches	Size of Injector	Diam. of Cyl., inches	Size of Injector
9	4 3/10	13	5 4/10	17	7½	21	9½†
10	4 3/10	14	6½	18	8½	22	10½
11	5 4/10	15	6½	19	8½†	23	10½
12	5 4/10	16	7½	20	9½	24	11½
						25	11½
						26	12 3/10

† Use next size larger with specially large boiler.

TABLE 18

IMPROVED SELF-ACTING INJECTOR

MAXIMUM AND MINIMUM CAPACITIES, ALL CLASSES

Gallons per Hour—5 Feet Lift. (7½ Gallons = 1 Cubic Foot.)

Size	60 Lbs. Steam		120 Lbs. Steam		180 Lbs. Steam		200 Lbs. Steam	
	Max.	Min.	Max.	Min.	Max.	Min.	Max.	Min.
‡4 3/10	427	158	562	208	517	345	500	350
5 4/10	667	247	907	340	1027	395	1035	455
6½	967	358	1320	489	1492	568	1516	667
7½	1290	477	1755	650	1987	757	2010	885
8½	1657	613	2257	835	2550	970	2587	1138
9½	2070	766	2820	1044	3150	1197	3187	1402
10½	2535	938	3450	1280	3900	1482	3952	1740
11½	3037	1124	4132	1530	4672	1775	4725	2079
12 3/10	3650	1351	4968	1847	5616	2134	5700	2450

‡ Class N. Imp. not made 4 3/10 size; only supplied in Classes L, M, and N.

Things to be Remembered. With Locomotives Carrying High Steam Pressure (180 to 225 Pounds). Set the injector just above the top water level of the tank. At 8 feet lift, 200 pounds, the capacity is about 10 per cent less than the list.

Cold water is best for the injector. Hot water reduces the life and efficiency. At 120 deg. the capac-

ity is about one-third below list given in the table. The range of capacities is reduced and no injector lifts as promptly.

Use large suction pipe and tank valve connections. If the diameter is increased one size, the gain in capacity is from 5 to 10 per cent.

Use large strainer with small holes. Small strainers require frequent cleaning. If the holes are large, cinders and coal pas through and wear the tubes. If the strainer is too small, the injector does not give full capacity. Be sure that the gasket between hose and suction pipe is not squeezed so as to close opening.

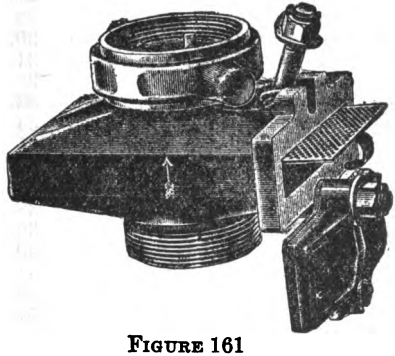

FIGURE 161

LOCOMOTIVE FEED-WATER STRAINER FOR RIGHT- OR LEFT-HAND SIDE OF ENGINE

Suction pipe must be absolutely tight. Any leak of air reduces the capacity and makes the overflow valve jump.

Delivery pipe and main check valve must be of ample area. If an injector gives high back pressure, it is using too much steam. If the delivery opening is too small, the power of the injector is wasted in increased friction in the pipes.

Take good care of the injector. Keep all glands steam-tight, and watch carefully for leaks in the suction pipe. Do not force the steam valve hard against its seat; close the valve gently. Start the injector in

the same way; at very high pressure the delivery pipe is liable to burst if the lever starting valve is jerked open. Keep the injector clean and report at once if not working properly. Do not run with the water-regulating valve wide open all the time.

List of Parts, Self-Acting Injector, Class N Improved

1. Delivery Tube.
2. Combining Tube.
3. Steam Nozzles.
5. Spindle Nut.
6. Steam Stuffing Box.
7. Spindle.
8. Cross-Head.
10. Water Stuffing Box.
11. Follower.
12. Packing Ring.
13. Lock Nut.
14. Follower for No. 10.
15. Links.
16. Packing Ring.
19. Plain } Rings for
19a. Reduc. } Copper Pipe.
20. Check Valve.
22. Guide for No. 20.
23. Plain } Unions for
23a. Reduc. } Iron Pipes.
24. Coupling Nuts.
25. Injector Body.
27. Wrench.
29. Waste Pipe.
30. Waste Valve.
31. Waste Valve Cam.
32. Jam Nut for No. 29.
33. Starting Lever.
34. Cam Lever.
35. Pin, Nos. 38 and 33.
36. Cam Shaft.
37. Washer on 36.
38. Collar and Index.
39. Funnel.
40. Plug Water Valve.
41. Regulating Handle.
42. Inlet Valve.
57. Closed Overflow Connection.

List of Parts, Self-Acting Injector, Class M Improved

1. Delivery Tube.
2. Combining Tube.
3. Steam Nozzles.
5. Spindle Nut.
6. Steam Stuffing Box.
7. Spindle.
8. Cross-Head.
10. Water Stuffing Box.
11. Follower.
12. Packing Ring.
13. Lock Nut.
14. Follower for No. 10.
15. Links.
16. Packing Ring.
19. Plain } Rings for
19a. Reduc. } Copper Pipe.
20. Check Valve.
22. Guide for No. 20.
23. Plain } Unions for
23a. Reduc. } Iron Pipes.
24. Coupling Nut.
25. Injector Body.
27. Wrench.
29. Waste Pipe.
30. Waste Valve.
31. Guide for No. 30.
32. Jam Nut for 31.

33. Starting Lever.
34. Cam Lever.
35. Pin, Nos. 38 and 33.
36. Pin through 31 and 34.
38. Collar and Index.
39. Funnel.
40. Plug Water Valve.
41. Regulating Handle.
42. Inlet Valve.
57. Closed Overflow Connection.
73. Guide for Overflow Valve 75.
74. Heater Stem.
75. Overflow Valve.
76. Follower.
77. Pack Ring in 73.
78. Heater Lever.

The Sellers' Self-Acting Injector. Class P—Sizes 10½ and 11½. This is a special form of body, designed to be applied to the back-head of the locomotive boiler, with the starting lever and water regulating valve placed directly over the brake valve and within convenient reach when the engineer is seated. The coupling nuts and sizes of the pipe are Pennsylvania Railroad (Sellers') Standard, but the branches are located so as to avoid the fire-door and boiler attachments.

Hints to be Read Before Connecting the Injector.

1. Blow out all pipes carefully with steam before attaching the injector, tapping the pipe with a hammer in order to loosen all the scale.

2. When drip pipe is attached close to overflow of injector, it must be same size as given in table.

3. Always use a dry pipe attachment to insure perfectly dry steam.

4. The diameter of the strainer should be large enough to give an ample supply of water even when some of the holes are choked.

5. Keep all valves steam-tight; all leaks tend to increase rapidly, owing to the velocity with which steam passes through the smallest opening.

6. Keep the steam pipe and chamber free from dirt and chips from the threads on the pipes, and the steam nozzles perfectly clean. The steam nozzle is the life

of an injector, and should be maintained in best condition. If the injector is new and the lifting nozzle should fill up, remove from body as described.

7. When grinding the steam valve, place a rubber washer over the holes leading to the lifting nozzle to prevent the sand from working into the lifting jet; this washer should, of course, be provided with a hole large enough to admit the plug on the end of the spindle; then screw the steam stuffing box rather tightly against its shoulder to insure its proper alignment. Keep the steam valve perfectly tight.

8. To remove lime and scale, immerse the tubes or the whole injector in a bath composed of ten parts of water to one part muriatic acid. Remove as soon as scale is dissolved.

Emergency Methods of handling the improved self-acting injector (Locomotive Firemen's Magazine) The improved self-acting injector in good working order is the most satisfactory boiler feeder that can be used, and fully deserves the confidence placed in it by careful enginemen. But there are times when even the best injector refuses to work. It may not be the fault of the injector itself; in fact, it seldom is to blame. Sometimes the trouble is due to careless handling, to the leaky condition of the steam valves, joints of the suction pipe and hose coupling; to cinders and dirt in the tank; and under such conditions many an injector is struggling, which not only reduces the efficiency and length of service, but finally prevents it from delivering water to the boiler.

It is of course difficult to do much in the way of repair to an injector when out on the road; even the pipe-coupling wrench is apt to be missing, and few tool boxes have wrenches for the removal of the tubes.

A special feature of the self-acting injector is that the combining and delivery tubes can be removed with ordinary tools, but when it is necessary to take an injector apart the leakage from the steam and main check valves makes the work very disagreeable; but when an injector does not work it is something more than aggravating, it is often serious, especially if the left-hand injector has not been used for some time and also refuses to start. Then is the time for quick thinking and quick acting.

Suppose that an injector suddenly stops working. Probably the tubes, hose, suction pipe or strainer are stopped up. The last two can probably be cleared out by closing the cam over the overflow valve and drawing the starting lever quickly; if the hose lining has become loose it will let the steam flow back and close up again as soon as the injector is started, disabling this injector until a short nipple or coiled wire can be forced up the hose or a new hose obtained. If the next station cannot be reached before water is needed the left-hand injector must be made to work, unless the train is stopped and the injector and pipes thoroughly examined. Treat the left-hand injector exactly as the right. Open the tank valve and draw the injector starting lever; if the water is lifted, but will not enter the boiler, set the lazy cock at half capacity and tap the main check valve on cap with hammer to loosen it in its guide; at half capacity, because at that point the injector gives a higher back pressure than with the lazy cock wide open. This will probably be effective.

To Remove Tubes. The sectional views show very clearly how the tubes are held in the body. Uncouple the feed pipe from the injector and swing it out of the

way; place a monkey wrench on the guide (22) for the line check (20) and unscrew; in some of the older patterns of injector it may be necessary to insert an old file or flat piece of iron, or perhaps two pieces in opposite openings; at any rate, it can be removed quite easily unless the seats are heavily lined up. This draws out the combining (2) and delivery (3) tubes, which can be separated and carefully examined inside; here is where the trouble will usually be found, and

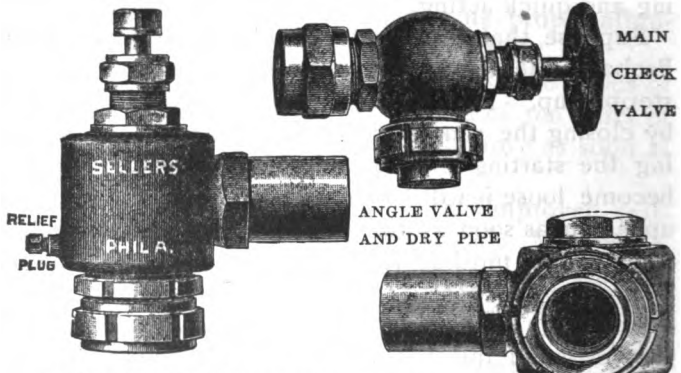

COMBINED STOP AND MAIN CHECK VALVE; BY CLOSING THE STOP VALVE, THE CHECK VALVE AND SEAT CAN BE REMOVED WITHOUT BLOWING OFF BOILER. SCREW OR FLANGED.

FIGURE 162

the impediment must be taken out without bruising the surface or bending the tubes. When the parts are replaced, test before recoupling the feed pipe. No steam should issue from suction branch.

Frequently the cause of stoppage is the absence of a strainer in the tank or suction pipe, or due to the fact that the holes in the straining plate are too large. An admirable arrangement of fixed strainer is shown in Fig. 161 placed between the hose and the suction pipe

Suppose that steam nozzles (piece 3) require cleaning. Stoppage of the lifting tube is usually gradual and is shown by a slow falling off in the working of the injector. These tubes are more difficult to remove unless a wrench to fit the hexagon is at hand. Sometimes a large iron chip or heavy piece of scale is carried into the nozzle (piece 3) by the steam, due to carelessness when cleaning the boiler, but this is of infrequent occurrence. If this happens it is better to make running repairs to the other injector and leave it for the men in special charge of injector repairs.

At times the main check valve does not seat and all efforts to close it prove unavailing; if the line check valve has been omitted during repair, the water from the boiler rushes back into the injector. With injectors having no lazy cock, the only method of preventing the burning of the crown sheet is to draw the fires; but with the self-acting close the overflow valve by means of the cam, then quickly shut the lazy cock. The check pipe and injector body will then carry full boiler pressure until the roundhouse is reached, when the fire can be drawn and the pressure blown off.

Leakage of air into the suction pipe is usually the cause for unsatisfactory working of the injector. Enginemen should be especially careful about this and always tighten the joints so that no air can enter; even a slight drip from any of the joints under the pressure of the water in the tank indicates a large enough opening to admit sufficient air to affect the working of the injector, especially when the water level in the tank is low. Another point is the tightness with which the cover of the manhole of the tank fits on its seat; if air does not enter freely upon the top of the water the capacity of the injector will be

reduced, the effect being more marked at high steam pressures and long lift than under ordinary conditions.

Lime and salts contained in the supply water coat the surfaces of the tubes; the accumulation occurs slowly, destroying the restarting feature, the promptness of lifting, and reduces the capacity; this should be at once reported to the proper authorities.

Inlet Valve (42). When the improved injector is feeding, the overflow chamber—the part of the body between the water branch and the waste pipe—is filled with cold water; if it does not feel cold to the hand the inlet valve (42) is not open and working properly. This method of surrounding the tubes with cold water tends to prevent the formation of scale, and this pattern of injector gives longer service in districts where the supply water contains lime than those that do not contain this feature. Crude oil introduced into the steam or water pipe softens the scale and is often helpful. Bosses on both the water and steam branches may be tapped for self-feeding oil cups, but all the joints should be tight.

Maintain the injector in good working order.

The Metropolitan "1898" Locomotive Injector, Figs. 163 and 164, is a double-tube injector, composed of a lifting set of tubes which lifts the water and delivers it to the forcing set of tubes under pressure, which in turn forces the water into the boiler.

The lifting set of tubes act as a governor to the forcing tubes, delivering the proper amount of water required for the condensation of the steam, thus enabling the injector to work without any adjustment under a great range of steam pressure, handle very hot water and admit of the capacity being regulated for light or heavy service under all conditions.

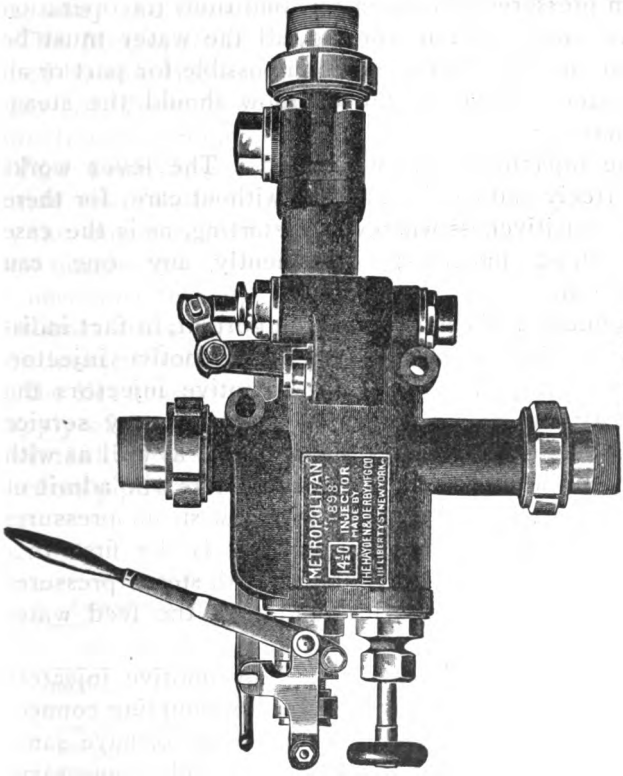

FIGURE 163

METROPOLITAN "1898" LOCOMOTIVE INJECTOR

This injector will start with 30 to 35 lbs. steam pressure, and without any adjustment of any kind will work at all steam pressures up to 300 lbs. In fact, at all steam pressures and under all conditions its operation is the same. When working, all the water must be forced into the boiler. It is impossible for part or all the water to waste at the overflow should the steam pressure vary.

The injector is easily handled. The lever works very freely and can be handled without care, for there is no sensitiveness whatever in starting, as is the case with most injectors; consequently any one can operate it.

Regulation of capacity is an important, in fact indispensable feature of the perfect locomotive injector. With Metropolitan "1898" locomotive injectors the capacity can be regulated for light or heavy service under all steam pressures and with hot as well as with cold feed water. While most injectors will admit of the capacity being regulated with low steam pressures and cold feed water, this injector is the first that admits of a successful regulation with steam pressures up to and above 250 lbs. and with the feed water heated.

Model H Metropolitan "1898" locomotive injectors will interchange and fit the Monitor coupling connections. Model H injectors, sizes 5 and 6, have same size body and interchange. Sizes 8 and 9 have same size body and interchange. Sizes 11 and 12 have same size body and interchange.

The Model H and Model I types of these injectors differ solely in the pipe connections and the form of the main casing or shell. All the parts for each are the same for corresponding sizes.

Model I Metropolitan "1898" locomotive injectors will interchange and fit the Sellers coupling connections. Model I injectors, sizes 6 and 7, have the same size body and interchange.

The Metropolitan locomotive injector is manufactured by the Hayden and Derby Manufacturing Company of New York, who furnish the following directions for connecting and operating it

Pipe Connections. The injector should be located inside the cab, so that it can be conveniently handled by the engineer. It should be located with the overflow nozzle about 4 in. above the top of the tank. It is necessary that the steam pipe and the openings in the main steam valve should be as large or larger than the inside diameter of the sizes of copper pipe given in the list below, so that the injector will receive a full supply of dry steam. The openings in the goose neck and tank valve should not be smaller than the size of suction pipe called for in the list below.

TABLE 19

Size	Capacity per Hour		Pipe Connections							
	Steam Pressures		Steam		Suction		Delivery		Overflow	
	160 Pounds	210 Pounds	Iron	Copper	Iron	Copper	Iron	Copper	Iron	Copper
5	1180 gals.	1210 gals.	1½	1¾	1½	1¾	1½	1¾	1¼	1½
6	1605 gals.	1047 gals.	1½	1¾	1½	1¾	1½	1¾	1¼	1½
7	2095 gals.	2151 gals.	1½	1¾	1½	1¾	1½	1	1¼	1½
8	2651 gals.	2723 gals.	2	2	2	2¼	2	2	1½	1¾
9	2954 gals.	3034 gals.	2	2	2	2¼	2	2	1½	1¾
10	3961 gals.	4068 gals.	2	2¼	2½	2¾	2	2¼	2	2¼
11	4700 gals.	4810 gals.	2½	2¾	3	3¼	2½	2¾	2	2¼
12	5700 gals.	5950 gals.	2½	2¾	3	3¼	2½	2¾	2	2¼

Operation. To start the Metropolitan "1898" locomotive injector, the lever, part 292, Fig. 164, is drawn

back, lifting the auxiliary steam valve, part 213, from its seat. This allows steam to flow through the lifting steam jet, part 224, into the lifting combining tube, part 225, thereby creating a vacuum in the suction chamber, causing the water to flow through the lifting combining tube, part 225, condensing the steam, then out through the overflow valve, part 215, and through the final overflow valve, part 234, through the overflow pipe to the atmosphere. A further movement of

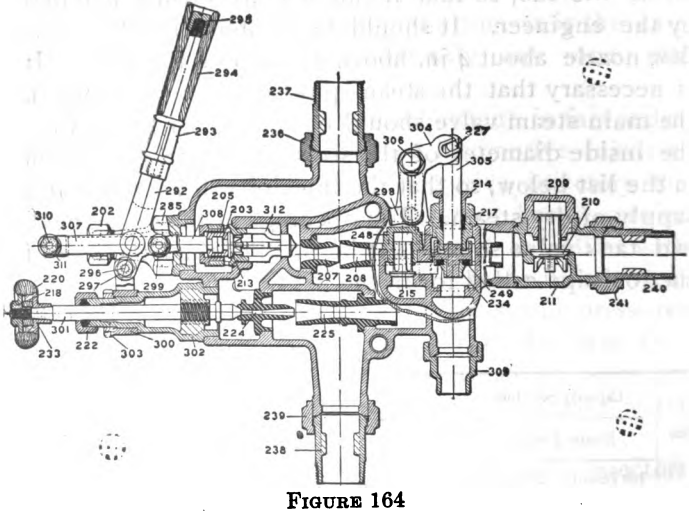

FIGURE 164

METROPOLITAN "1898" INJECTOR, SECTIONAL VIEW

the lever, part 292, opens the steam valve, part 206, which admits steam to the forcing steam jet, part 207, which is condensed by the water which is in the intermediate chamber and in the forcing combining tube, part 208, creating a pressure in the delivery chamber of the injector, which is sufficient to close the overflow valve, part 215; and a further movement of the

lever, part 292, closes the final overthrow valve thereby turning the water from the overflow into the boiler, thus opening the check valve, part 210. When the injector is working, the overflow valve is closed and held to its seat by pressure equal to the boiler pressure.

The capacity of the Metropolitan "1898" locomotive injector is regulated by increasing or decreasing the amount of steam to the lifting steam jet, part 224, by

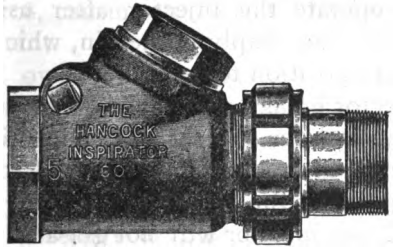

FIGURE 165

SWING INTERMEDIATE CHECK VALVES,

EXTERIOR VIEW

means of the regulating valve, part 301. When this valve is wide open, the lifting steam jet, part 224, receives a full amount of steam, which enables the lifting apparatus of the injector to lift the greatest quantity of water and deliver it to the forcing apparatus. When this regulating valve, part 301, is partially closed, it will partially close the opening into the lifting steam jet, part 224, decreasing the flow of steam, which will decrease the amount of water lifted by the lifting apparatus. This arrangement has been found

to be far better than the old method of throttling the water supply. It enables the injector to run steadier when working at its minimum capacity and also enables the capacity to be reduced more.

To use the injector as a heater, lift the side links, part 286, by means of the small handle on same, and pull the links back until the pin, part 287, drops into the notch. This operation causes the final overflow to be closed and a small amount of steam can be admitted, enough to heat the injector. When it is desired to operate the injector after using it as a heater, the lever is simply pushed in, which will place the injector in position to be operated.

If the injector breaks or will not start promptly, see if there is a leak in the suction connection. If the openings into the tank are too small, or the hose strainer clogged, or the hose kinked, or the hose lining is collapsed, the injector will not get a sufficient supply of water. If the injector will lift the water but will not deliver it into the boiler, see that the intermediate or line check valve, or the main boiler check valve are in proper working order, also examine the suction pipe for leaks. A leak in the suction pipe, while it may not prevent the injector from lifting, will prevent the water being forced into the boiler. If the main steam pipe or the main steam valve are not of sufficient size, or if there is a leak in the dry pipe, the injector will not receive a supply of steam sufficient to force the water into the boiler. If the overflow pipe is smaller than the overflow nozzle, there will be a back pressure, which will prevent the injector from lifting the water promptly. The overflow nozzle and overflow pipe should be kept free from lime or scale. This is very important.

Repairing. When the tubes become worn they should be renewed. The forcing tubes are removed by removing the check valve casing, part 211, by breaking the flanged joint. The lifting tubes are removed by removing the regulating center piece, part 302. Should the steam valves leak they should be re-ground. Overflow valve, part 215, must seat tightly. If this valve leaks, it will cause the hot water from the delivery chamber of the injector to be forced into the intermediate chamber and drawn into the combining tube, part 208, causing the injector to break. This is very important.

The final overflow valve has a soft disk, part 249. This disk is made soft so that in case the valve should close on to any hard substance, it will not injure the valve seat. These disks can be removed very easily and are very inexpensive.

Swing Intermediate or Line Check Valves (Hancock Pattern, Fig. 165). These check valves can be applied to any locomotive injector.

There are no wings or guides to become incrusted with scale or deposit while the valve is open, which would prevent its closing, and the liability therefore of damage or delay caused by the valve failing to close is obviated.

The Monitor Injector. (Figs. 166-167, made by the Nathan Manufacturing Co., New York.) The proper position of this injector is in the cab above the level of the water in tender, convenient to engineer. Should the Monitor have to be placed outside, it must be provided with connecting rods extending into the cab. Steam should be taken from dome or highest part of boiler to insure best effects.

Its Range. It does not waste water at overflow by

ordinary variation of working steam pressure, but steadily performs its duty, whether the water-valve is wide open or throttled down until almost shut.

Steadiness. It works steadily, whether the engine is running fast or slow; while reversing, applying brakes, and during ordinary stoppages. It is also capable of

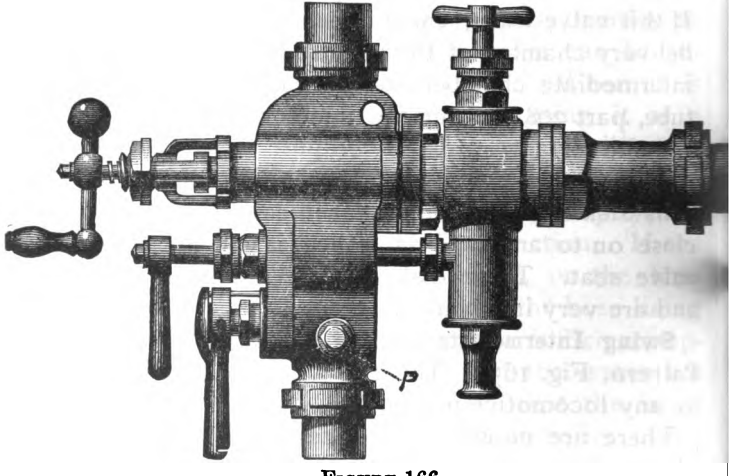

FIGURE 166
THE "MONITOR," EXTERIOR VIEW

running heavy as well as light trains, the quantity of water needed being easily regulated by the water-valve attached.

Reliability. It is provided with an independent lifting jet, which enables the injector to start promptly at all times. This is a peculiar feature and very important, because it allows the injector to start as promptly after doing its duty as a heater cock, as at first.

Flanged Monitors. Since 1885 the body of the Monitor has been divided into two parts, which are firmly

held together by a double flange securely bolted. This very convenient arrangement enables the interior parts to be taken out readily, for cleaning or renewal, when necessary, without injury to the injector.

Recent Improvements. The steam valve spindle is provided with an improved patent yoke stuffing box, which makes it possible to place the threaded part of

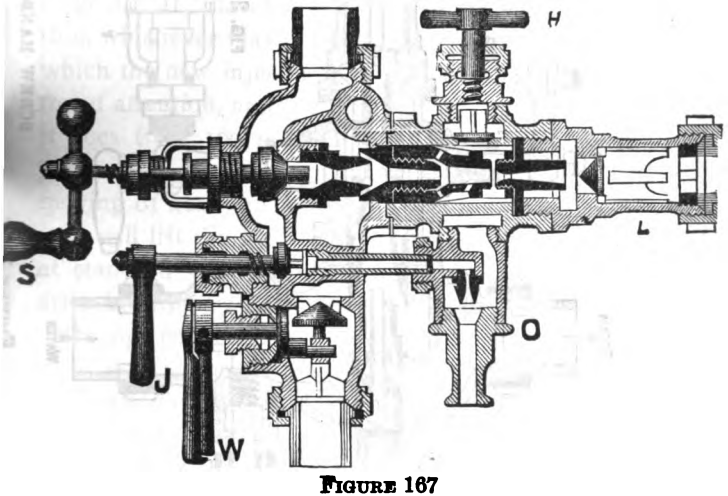

FIGURE 167
THE "MONITOR," INTERIOR VIEW

the spindle outside the steam chamber, diminishing its wear. The packing can be adjusted and tightened by means of a large central nut, still preserving the simplicity and convenience of an ordinary stuffing box.

The water valve has been provided with a double handle with index pin, which engages with notches, cut into the stuffing box cap, thereby keeping the water valve steady in any position against any jar or vibration of the engine.

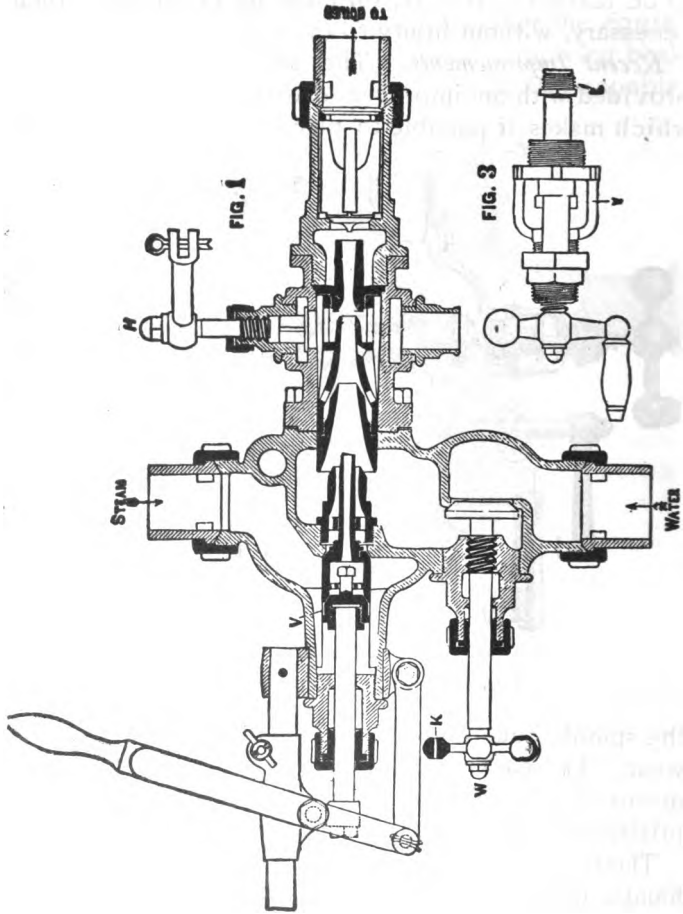

FIGURE 168 SCREW HANDLE

Description of '88 Monitor, Fig. 168. This injector is a modification of the well-known locomotive injector of that name, and is designed to supply the demand for a lever-handled injector, and embody in a new combination all the best qualities of the former instrument. The most prominent feature of the '88 Monitor is the facility with which it can be started and stopped by the new lever-handle attachment, or the single screw spindle motion, whichever may be preferred. The quantity of water which the new injector is capable of throwing, will command attention, and the range of its capacity, running as it does from 100 per cent at maximum to less than 50 per cent at minimum, makes it equally applicable to the moving of heavy or light trains, as the case may happen.

It will lift the feed-water 5 ft. at 30 lbs. pressure, and at standard working pressure, to a height not likely to arise in ordinary locomotive practice.

Its pipe connections are the same as the other Monitors and interchangeable therewith, so that in the use of the new instrument, the old fittings, if they are good, need not be disturbed.

The construction of the starting arrangements is such that the screw attachment can be readily substituted for the lever-handle, should the former method be preferred.

Directions for Application. Place the injector above water level in tender. Take steam from dome, or highest part of boiler, through dry pipe. This will insure the best effects.

Instructions to Operate the Injector. *With Lever Motion.* To start: Pull out the lever a short distance to lift the water; when water runs from the overflow, steadily draw back the lever until overflow ceases.

Do not increase the steam supply after overflow has ceased.

Regulate for quantity with water-valve W

To stop: Push in the lever.

With Screw Motion. To start: Open the steam valve one-quarter of a turn to lift the water. When water runs from the overflow, open steam valve until overflow ceases. Do not increase the steam supply after overflow has ceased.

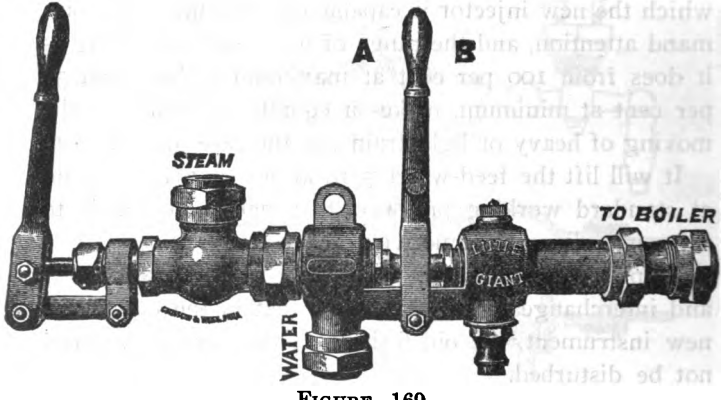

FIGURE 169

Regulate for quantity with water-valve W.

To stop: Close steam valve.

Note 1. To grade injector: Throttle water by valve W; if this is not sufficient, reduce the steam by pushing in lever handle about half-way, and in case of the screw motion, by screwing in the steam spindle about half-way.

2. To use as a heater: Close valve H and pull out lever all the way, and in case of screw motion open valve full. At all other times valve H must be kept open.

3. The heater cock can be worked from the cab by means of arm A, adapted for the attachment of an extension rod. Arm A is held on the heater cock spindle by friction, and by loosening cap C it can be set at any angle to suit the most convenient position for the extension rod.

4. The hole in the top knob K of water handle W indicates the position of the water valve. One turn of the handle fully opens, or entirely closes, the water passage.

In either case, the knob with the hole in should be in an upright position. . Intermediate positions of the knob K indicate corresponding openings in the water passage.

The Little Giant Locomotive Injectors, Fig. 169, made by the Rue Manufacturing Co., Philadelphia, have been on the market for many years. This injector is simple in construction, and is not liable to get out of order.

These injectors are fitted with a movable combining tube, operated by a lever which allows them to be adjusted to work correctly at different pressures of steam, and under the many conditions which injectors are required to work.

TABLE 20—SIZE AND CAPACITY

Size of Injector	Copper Pipe Outside		Iron Pipe Inside		Gallons of Water per hour
	Steam	Water & Delivery	Steam	Water & Delivery	
4	$\frac{7}{8}$	$\frac{7}{8}$	$\frac{3}{4}$	$\frac{3}{4}$	600
5	$1\frac{1}{8}$	$1\frac{1}{8}$	1	1	950
6	$1\frac{3}{8}$	$1\frac{3}{8}$	$1\frac{1}{4}$	$1\frac{1}{4}$	1275
7	$1\frac{3}{8}$	$1\frac{3}{8}$	$1\frac{1}{4}$	$1\frac{1}{4}$	1800
8	$1\frac{3}{4}$	$1\frac{3}{4}$	$1\frac{1}{2}$	$1\frac{1}{2}$	2250
9	$1\frac{3}{4}$	$1\frac{3}{4}$	$1\frac{1}{2}$	$1\frac{1}{2}$	2800
10	$1\frac{3}{4}$	$2\frac{1}{4}$	$1\frac{1}{2}$	2	3500

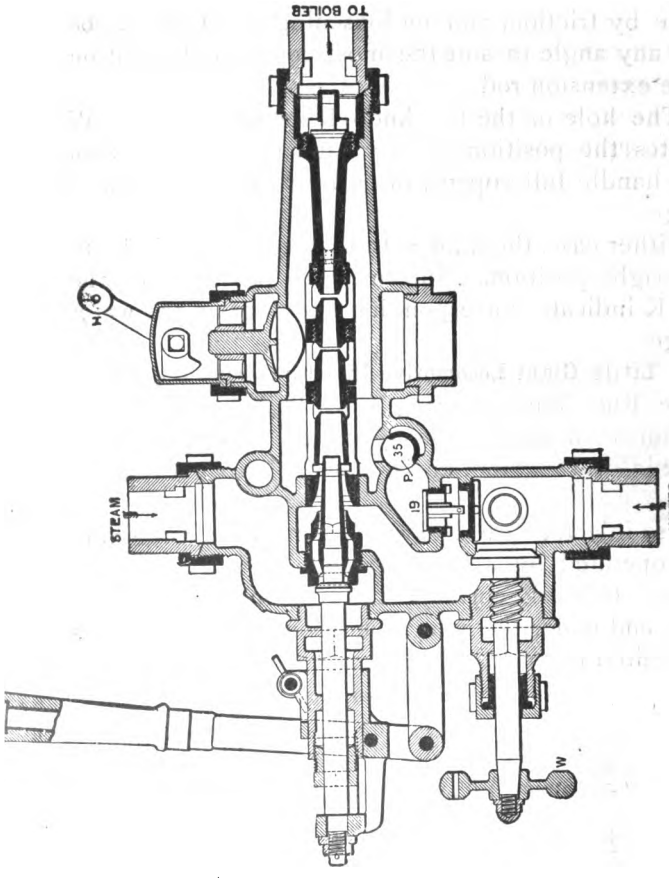

FIGURE 170
THE SIMPLEX INJECTOR

To Operate. Have the combining tube in position to allow a sufficient quantity of water to condense the steam when the starting valve is full open, then open the starting valve slightly; when water shows at overflow, open full. Regulate the water by moving the combining tube. To use as a heater, close overflow by moving the combining tube up against the discharge, then open starting valve enough to admit the quantity of steam required.

The Simplex Locomotive Injector, Fig. 170, has been designed to meet the severe requirements of modern locomotive practice, especially where it is desired that the instrument be self-adjusting and re-starting.

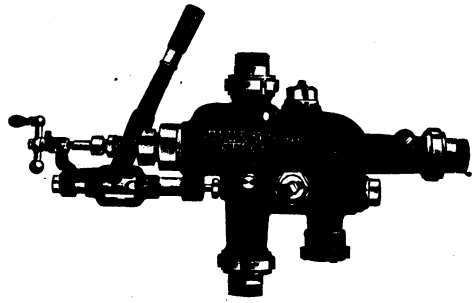

FIGURE 171

LUNKENHEIMER '99 MODEL STANDARD INJECTOR

Attention is called to the largely increased delivering capacities at the high steam pressure of locomotive engines of to-day.

This injector is of the "re-starting" type, and if the water supply should happen to be temporarily interrupted, the instrument will start again without any manipulation, just as soon as the water supply is again within reach. The instrument is also "self-regulating," and requires no water valve regulation above 50 lbs. steam pressure, to prevent spilling at the overflow. Its lifting qualities are of the highest order, and

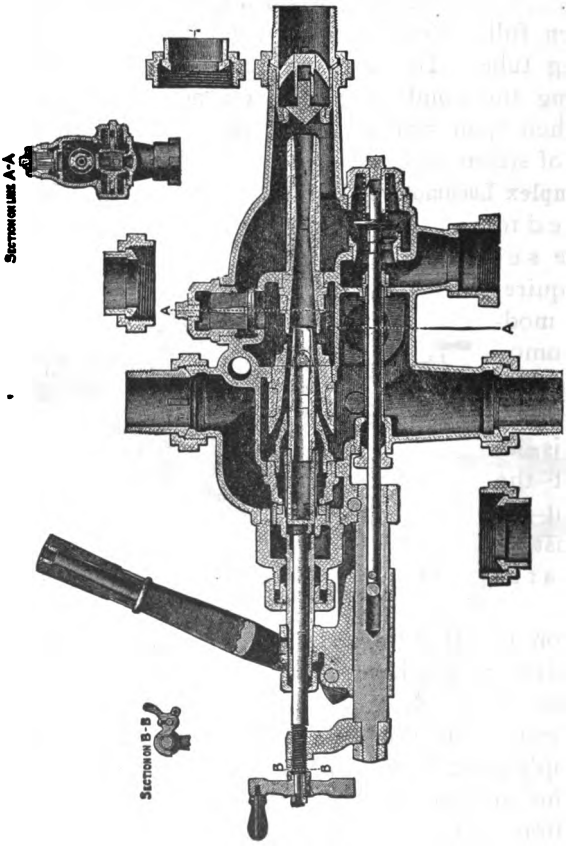

FIGURE 172

SECTIONAL VIEW

LUNKENHEIMER '99 MODEL STANDARD INJECTOR

it may be relied upon to start promptly after doing duty as a heater.

The throttling capacity is fully 50 per cent of the maximum capacity under ordinary variations of lift and of feed water temperature.

If it is desired that the instrument be placed outside the engine cab, and operated by means of extension

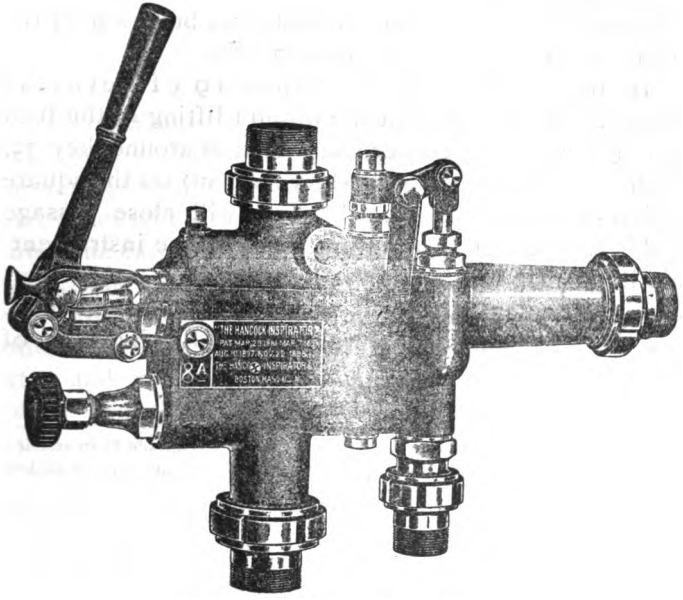

FIGURE 173

THE HANCOCK INSPIRATOR, SECTIONAL VIEW

rods, a quick motion screw attachment can be readily substituted in the place of the lever handle.

The construction of the injector is such that all its interior nozzles and other component parts are easily accessible for examination and repairs.

Method of Operating. To start: Pull out the lever.

To stop: Push in the lever.

Regulate for quantity by means of the water valve.

To use as heater for the feed water: Close heater cock and draw out the lever.

In starting on high lifts and in lifting hot water, pull the lever out slowly.

In case a pipe is attached to the overflow, its inside diameter must under no circumstances be less than the inside diameter of the overflow nozzle.

If the water inlet valve (part 19 of details) should leak and prevent the prompt lifting of the feed water, it will only be necessary to turn around key 35, so that the letter "S" (not shown on cut) on the square spindle-end will be "up." This will close passage "P," and permit the continued use of the instrument until valve 19 can be repaired.

The Simplex injector is made by the Nathan Mfg. Co. of New York, who furnish the following table of capacities.

TABLE 21

Size	Capacity in Gallons p'r Hour		Inside Diameter of Iron Pipes, in Inches			Outside Diameter of Copper Pipe, in Inches		
	125 lbs.	200 lbs.	Steam	Suction	Delivery	Steam	Suction	Delivery
5	990	1140	1¼	1¼	1¼	1½	1½	1½
6	1260	1440	1¼	1¼	1¼	1½	1½	1½
7	1830	1950	1½	1½	1½	1¾	1¾	1¾
8	2280	2580	1½	2	2	1¾	2	2
9	2880	3240	1½	2	2	1¾	2¼	2
10	3450	3800	2	2	2	2¼	2¼	2¼

Lunkenheimer '99 Model Standard Injector. Figs. 171-172. This injector embodies in its construction all desirable features which tend to make an injector high grade and efficient. Under high steam pressures it is necessary to have a machine which can be operated as

efficiently as under low pressures, and one which admits of sufficient range of work to cover all conditions of service.

The construction is simple, manipulation easy, and the results attained show a high degree of efficiency. It can be started promptly, under most conditions, at all pressures from 30 to 250 lbs., and can be handled without fear of uncertainty of action, as it is not sensitive in this respect. It will work without adjustment of steam or water from 40 to 250 lbs. and higher, and the capacity can be reduced over 50 per cent at all points. This feature makes it especially suitable for severe service, such as is found on railroads, steamboats and high-pressure power plants, and in other places where the load varies and it is necessary to have an injector in which the capacity can be reduced within wide limits.

The design of the machine is excellent, the parts are well proportioned, the operating mechanism which controls the steam and overflow valves is not complicated and is all contained within the body of the injector, and there are no outside connecting rods, usually found in machines of this class.

TABLE 22. CAPACITIES OF THE LUNKENHEIMER STANDARD INJECTOR

Size No.	Pipe Con. Steam Suction Delivery	Pipe Connections Overflow	Maximum Capacities at Various Steam Pressures Feed Water, 76° F. Lift, 5 feet.				
			125lbs.	150lbs.	175lbs.	200lbs.	225lbs.
8½	¾″	½″	650	665	682	700	715
9½	1″	¾″	835	855	876	900	925
10½	1¼″	1″	1110	1140	1170	1200	1230
11½	1¼″	1″	1485	1520	1560	1600	1640
12½	1¼″	1¼″	1865	1910	1950	2000	2050
13½	2″	1¼″	2320	2375	2440	2500	2560
14½	2″	1½″	2780	2850	2925	3000	3080
15	2″	1½″	3430	3518	3610	3700	3795
15½	2″	1½″	3820	3910	4000	4100	4200
16½	2½″	2″	4640	4760	4875	5000	5130

The Hancock Locomotive Inspirator. The Hancock inspirator consists of one apparatus for lifting and one for forcing. The original stationary type embodied this feature by incorporating two chambers side by side, connected at the top for steam, and at the bottom for water, so that it was apparent to the casual observer that each carried its own set of apparatus. The Hancock inspirator works successfully under the most severe conditions. With high or low steam pressure, on all lifts up to 25 feet, when taking feed water under a head, with hot feed water as well as cold, for all steam pressures and for all conditions, its operation is the same and it requires no adjustment for varying steam pressures.

The lifting apparatus consisted of a steam nozzle and a combining tube. The throat of the combining tube being so much larger than the smallest opening in the steam nozzle enables it to increase or diminish the amount of water as the pressure of steam increases or decreases. As pressure of steam increases, the pressure in the forcing chamber or delivery chamber of the lifter is increased, enabling the water to enter the forcer combining tube against the increased tension of the steam from the forcing nozzle, thus enabling it to work from low pressures to high without any adjustment of either steam or water supply. The forcing or combining tube being made without any openings between its mouth and discharge end, permits of the steam and water combining up to a very high temperature, the overflow being closed positively.

The above described apparatus as made and used was provided with a separate valve for opening and closing the intermediate overflow in starting, and valve for opening and closing the steam to the forcer

and the final overflow valve. While each was very simple in construction and the operating of the inspirator was easily understood, still for locomotive purposes it was considered that the functions performed by the valves above mentioned should be brought under the control of one operating lever.

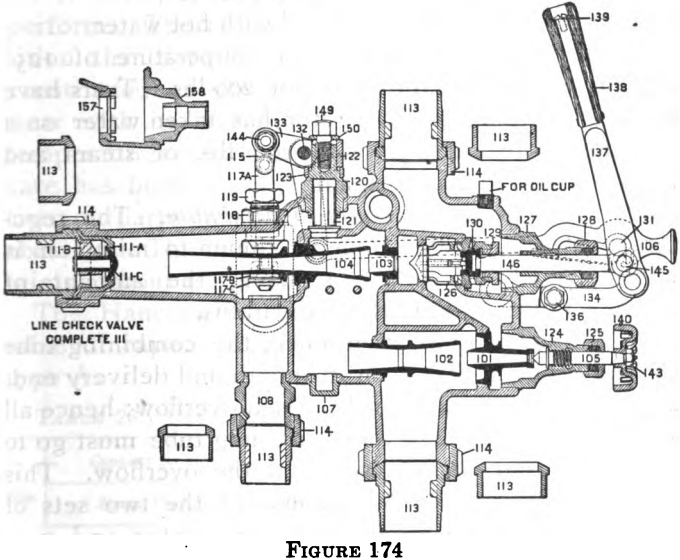

FIGURE 174

THE HANCOCK INSPIRATOR, SECTIONAL VIEW

To accomplish this, the Hancock locomotive inspirator, Fig. 173, operated by a single lever, was evolved, and is made in different types to suit different connections.

The present Hancock locomotive inspirator will work successfully with pressures of steam from 35 lbs. to 350 lbs. without any adjustment of either steam or water, and the proportions are such as to increase its

quantity of water from 35 lbs. to 200 lbs., this being about the average pressures carried on locomotives, and while its maximum capacity is at 200 lbs. the percentage of decrease from 200 lbs. down to 160 lbs. is not enough to interfere with the requirements of the locomotive. It will lift water promptly on the highest lifts encountered in locomotive practice, even if the suction becomes heated or filled with hot water.

It will take feed water at a temperature of 125° reliably with a steam pressure of 200 lbs. Tests have been made where the inspirator has taken water on a lift of two feet at 132° with 200 lbs. of steam and at 140° with 140 lbs. of steam.

Regulation from Maximum to Minimum. The regulation of this machine from maximum to minimum is accomplished by simply reducing the amount of steam supplied to the lifting apparatus.

As has been before mentioned, the combining tube has no openings between its mouth and delivery end, and it admits of a positively closed overflow; hence all water passing through the combining tube must go to the boiler and cannot escape at the overflow. This condition is possible on account of the two sets of tubes, the lifting tube acting as a regulator and governor for the forcer, hence requiring no adjustment from the lowest to the highest steam pressures within its entire range.

Internal Arrangement. The intermediate overflow valve operates automatically, its only function being to give direct relief to the lifter steam nozzle when lifting or priming, and comes to its seat when the forcer steam is applied and is held there by the pressure exerted by the forcer.

An observation of the internal parts of this instru-

ment, Fig. 174, will show at once the simplicity of its construction and the ease with which it can be repaired and parts renewed.

Material. In the manufacture of the Hancock locomotive inspirator the formulae used in the composition of the material for the several parts have been selected especially for the service each part has to perform. The tubes and valves are made of composition that does not contain zinc. Other parts are constructed of material that will produce the least wear with its companion piece. As with the high temperatures incident upon high pressure of steam, care has been taken in the selection of the composition of parts that would work in harmony without abrasion. The bodies are made of a composition containing about 10 per cent of tin.

The Hancock Inspirator Co. furnish the following table of capacities and sizes of pipe connections for type A:

TABLE 23. CAPACITIES AND SIZES OF PIPE CONNECTIONS

Size	Capacity per Hour		Pipe Connections							
	Steam Pressures		Steam		Suction		Delivery		Overflow	
	160 Pounds	210 Pounds	Iron	Copper	Iron	Copper	Iron	Copper	Iron	Copper
5	1180 gals.	1210 gals.	1¼	1½	1¼	1½	1¼	1½	1¼	1½
6	1605 gals.	1647 gals.	1¼	1½	1¼	1½	1¼	1½	1¼	1½
7	2095 gals.	2151 gals.	1½	1¾	1½	1¾	1½	1¾	1½	1¾
8	2651 gals.	2723 gals.	2	2	2	2¼	2	2	1½	1¾
9	2954 gals.	3034 gals	2	2	2	2¼	2	2	1½	1¾
9½	3274 gals.	3362 gals.	2	2	2	2¼	2	2	1½	1¾
10	3961 gals.	4068 gals.	2	2¼	2½	2¾	2	2¼	1½	1¾
11	4215 gals.	4450 gals.	2	2¼	2½	2¾	2	2¼	1½	1¾

Type A Hancock inspirator will interchange and fit the Monitor coupling connections.

Hancock inspirators, type A, sizes 5 and 6, have the

same size body and interchange. Sizes 8, 9 and 9½ have the same size body and interchange.

Type B Hancock inspirator will interchange and fit the Sellers coupling connections.

Hancock inspirators, type B, sizes 5, 6 and 7, have the same size body and interchange. Sizes 8, 9 and 9½ have the same size body and interchange.

The Hancock inspirators, types A, B and D, differ only in the form of the bodies and connections. All internal parts are the same for corresponding sizes. All external parts are the same for corresponding sizes, except part No. 106 (connecting rod).

Directions for Connecting and Operating. To obtain the best results, locate the inspirator with the overflow nozzle about 4 in. above the water in the tank. Take the steam through a dry pipe from the dome. Connections from the inspirator to the dome must not be smaller than the inside diameter of the size of copper pipe given in Table 23. The openings in the suction or feed pipe connections from the inspirator to the tank must not be smaller than the inside diameter of the sizes of iron pipe given in Table 23.

Overflow Pipe. An ordinary source of annoyance very often occurs from the overflow nozzle or overflow pipe becoming filled up, contracting the openings so that the inspirator will not lift or prime promptly. Sometimes it occurs that when the overflow nozzle is all free and clear the overflow pipe is apt to escape the attention of the person doing the repairs or overhauling the inspirator, and are reported not working satisfactorily. It is almost impossible to ascertain this without removing the pipe. These pipes should always be looked over and kept free.

Intermediate or Line Check Valve. The intermediate

or line check valve in the delivery pipe should receive attention. The line check valve in the delivery end of the inspirator, in case of impure water, should be looked after frequently. When the inspirator is provided with a swing check valve, care should be taken to keep this valve clear from deposits resulting from impurities in the water.

Suction Pipes. Where iron suction pipes are used, especially if the pipe is in two pieces and connected by unions, they should be carefully watched to see that they are absolutely tight and well supported, as a very slight leakage of air will materially reduce the capacity of the inspirator, and if too large a quantity of air is admitted it will cause the inspirator to break.

In General. It is very important that there should be ample steam and water supply to all types of the Hancock inspirator. It sometimes occurs that the inspirator will not work satisfactorily with the regulating valve wide open or at its maximum, but will work when this valve is partially closed or when at its minimum. This indicates clearly an insufficient steam supply. It may be due to the contracted openings in the valve next to the boiler, combination box, or too small dry pipe leading to the combination box, and should be remedied. An insufficient supply of water caused by too small size or restricted opening in the tank valve, too small opening in the goose neck leading to the tank, too small area in the strainer, a kinked or partially collapsed hose, or leaks in the suction pipe, would cause the inspirator to break.

Operation. To start the inspirator, draw the lever, part No. 137, Fig. 174, back to lift the water, then draw it back to the stop. When the lever, part No. 137, is drawn back slightly, steam is admitted to the lifter

steam valve, part No. 130, through the forcer steam valve, part No. 126, to the lifter steam nozzle, part No. 101. The flow of the steam into the lifter tube, part No. 102, creates a vacuum, and causes the water to flow through the lifter tube, part No. 102, condensing the steam, and out through the intermediate overflow valve, part No. 121, and through the final overflow

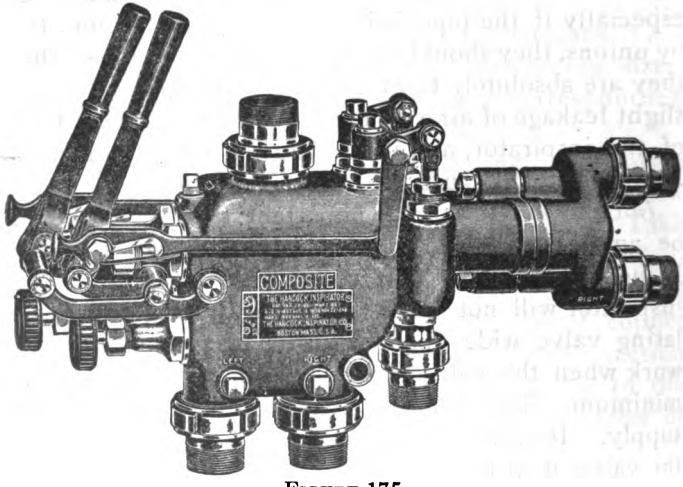

FIGURE 175
HANCOCK INSPIRATOR, TYPE COMPOSITE

valve, part No. 117, in the delivery chamber. A further movement of the lever, part No. 137, opens the forcer steam valve, part No. 126, admitting steam to the forcer steam nozzle, part No. 103, and to the forcer combining tube, part No. 104, creating a pressure in the delivery chamber sufficient to close the intermediate overflow valve, part No. 121, and open the intermediate or line check valve, part No. 111. The final overflow valve, part No. 117, will be closed

and the inspirator in full operation when the lever is drawn back to the stop. When the pin in the wheel of the regulating valve is at the top, the inspirator will deliver its maximum quantity of water; to reduce the feed, turn the regulating wheel to the right.

Regulating. To use the patent heater attachment, lift the connecting rod, part No. 106, until disengaged from the stud in the lever, part No. 131, then draw back the connecting rod to close the overflow valve, part No. 117. Draw the lever back to the point used in lifting. This will usually give all the steam that is required for a heater. If the amount going back is too large, regulate it by the regulating wheel to give just the amount required, as with the lever in the position described all the steam blowing back would pass through the lifter nozzle. Thereby the closing of the main steam valve at the boiler becomes unnecessary.

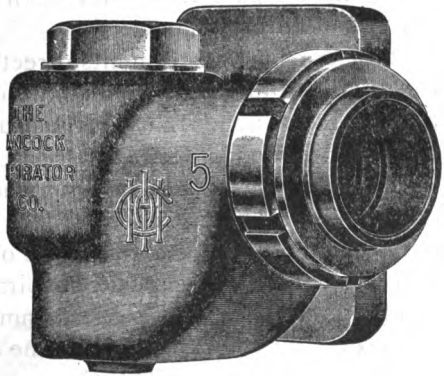

FIGURE 176 a
THE HANCOCK MAIN BOILER CHECK VALVE

Type Composite. The Hancock composite inspirator, Fig. 175, consists of two separate and individual inspirators within one body or casing, which can be operated separately or simultaneously, as desired. Where it may be desired to locate both injectors on one side of the locomotive, convenient to either the

engineer or fireman who has charge of pumping the engine, or on the boiler butt, available to both, the advantages of the composite are apparent. Owing to the limited room in the cab, it is generally difficult to locate both instruments so that they can both be operated by the engineer and be equally convenient.

It occupies but little more space than a single inspirator or injector, and owing to its compactness it has been found that it can be located in positions where in the past it has not been possible to locate two separate instruments.

It places both instruments directly under control of the engineer, and both are equally convenient to operate, the result being that both instruments are operated and kept in good order.

Each instrument has an independent suction pipe, delivery pipe and line check valve, thus enabling each to be operated independent of the other.

In attaching the composite inspirator (either to back head or side of boiler), one steam valve, one steam pipe, one overflow pipe and one opening into the boiler are dispensed with, thus effecting a very considerable saving of material and labor which would be required with two separate instruments.

The operation of the Hancock composite inspirator is the same as the Hancock inspirator, types A, B and D. To operate either instrument, draw the lever back until the water is lifted, then draw it back as far as it will go. To put both instruments in operation, start one and then the other.

It is desirable to use a double check valve in connection with the composite inspirator.

The Hancock Boiler Washer. Fig. 177. A perfectly simple and durable apparatus for washing boilers.

Will either lift water from 15 to 20 feet or take it under a head.

At a steam pressure of 100 lbs. the temperature of the delivery water will be about 120° Fahrenheit, or as hot as it can be conveniently handled.

The hose or delivery end of the boiler washer is left blank, to be threaded to fit hose couplings in use, or will be threaded as desired.

TABLE 24. CAPACITIES AND SIZES OF PIPE CONNECTIONS

Size	Capacity per Hour, Steam Pressure 60 Pounds	Pipe Connections		Discharge Nozzle for end of Delivery Hose
		Steam	Suc. and Delivery	
Small.....	2200 gals.	¾ inch.	1½ inch.	¾ inch.
Medium...	3900 "	1 "	2 "	1 "
Large.....	6000 "	1¼ "	2½ "	1¼ "

Pipe Connections. For steam, suction and delivery connections, see above table.

Place a globe valve in the steam pipe for a starting valve, and another valve in suction pipe for a water valve.

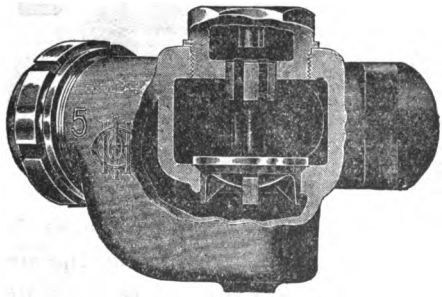

FIGURE 176 b
SECTIONAL VIEW OF THE HANCOCK MAIN BOILER CHECK VALVE

If the boiler washer is to lift water, there should be an overflow or outlet pipe not smaller than one inch in size connected to the delivery pipe. Place a valve in this overflow pipe.

Operation. If the boiler washer takes the water

under a head, open the water valve in the suction pipe and then open the valve in the steam pipe.

Vary the temperature of the delivery water by regulating the steam and water supplies with either the starting or water valve or both.

If the boiler washer lifts the water, open both the valve in the overflow pipe and the water valve in the suction pipe, and give steam with the starting valve.

When water appears at the overflow, close the valve in the overflow pipe, and vary the temperature of the

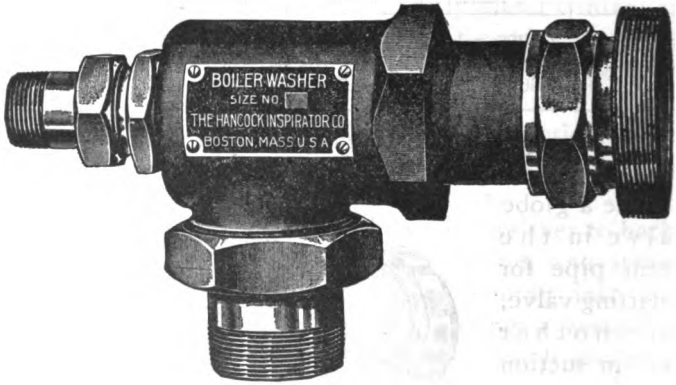

FIGURE 177

THE HANCOCK BOILER WASHER

delivery water by regulating the steam and water supplies with either the starting or water valve or both.

STEAM GAUGES

The theory and action of the Bourdon spring gauge has already been discussed to some extent, and will not be enlarged upon except to give some illustrations of the latest improved types of pressure gauges with which modern locomotives are fitted.

SECTIONAL VIEW

FIGURE 178

CROSBY LOCOMOTIVE PRESSURE GAUGE

Crosby Improved Locomotive Pressure Gauge. Attention is called to the cut, Fig. 178, of the Crosby improved locomotive pressure gauge, showing the Bourdon tube springs and their mechanism. It will be observed that the tube springs are attached to the socket and to the tips, to which the lever mechanism is connected in a new way.

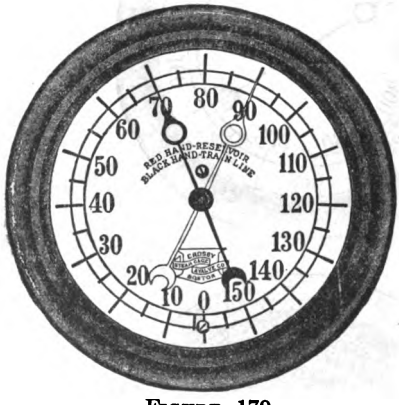

FIGURE 179
CROSBY DUPLEX GAUGE

The method practiced is to have these attachments of the tube springs made by means of solder or other metal of low-fusing point, and, while this may be safe in all low-pressure gauges, or where in their location in use they are not subjected to great heat, yet it is hazardous where high pressures of steam are to be measured by them, especially where there is liability of the admission of such steam into the tube springs. In such case the soldering material may soften, and under the high pressure be forced out, causing a leak and the destruction of the gauge.

In the Crosby improved locomotive pressure gauge, the tube springs are connected at each end with their respective parts by screw threads, without the use of any soldering material whatever, thus insuring tight joints under all conditions of heat and pressure.

In addition to the improved Bourdon tube springs so employed, careful attention has been given to the lever mechanism which transmits the free movements of these Bourdon tube springs to the index. They have been designed and constructed not only to convey the full movement of the tube springs, but so that they may be renewed without difficulty in case of repairs or reconstruction.

American Locomotive Gauge, with non-corrosive movement, Figs. 181 and 182. It is constructed of metals of superior quality, to withstand the constant vibration to which it is subjected. The spring is made of very heavy seamless drawn tube of superior quality. The connections are made of hard phosphor bronze. The movement is made with a wide faced sector which will outwear three of the ordinary sectors. The pinion and sector shafts are made of hard phosphor bronze, and the hair spring is made of bronze, making the gauge non-corrosive, rigid, and adding materially to the life of the gauge.

POP VALVES

Safety Valves. One of the prime causes of boiler explosion is the gradual and insidious increase of the pressure of steam beyond the endurance of the boiler; but to every boiler there is a limit of pressure within which it is substantially safe. This point should be ascertained by hydraulic test annually, and no excess of pressure beyond this limit should be allowed at any time. The only sure preventive is a safety valve which is all its name implies. The diameter of a safety valve is not a test of its efficiency. A valve is effective in direct proportion to its lift, other things

FIGURE 180
CROSBY DUPLEX GAUGE, SECTIONAL VIEW

BLACK DIAL WHITE DIAL

FIGURE 181

THE AMERICAN LOCOMOTIVE PRESSURE GAUGE

being equal. The higher the pressure of steam, the less will a common safety valve lift; at most, its lift is very slight, and with the increasing pressure of steam, the lift will not increase sufficiently to relieve the boiler under all circumstances; but the pressure can and may increase until an explosion occurs, while the valve is in operation. The common safety valve has much to answer for. Owing to the great friction of its parts, it will not open until the pressure is above what it is set at; it will continue to blow after the pressure of the steam has fallen far below the point of opening; it wastes large quantities of valuable steam in operation. There are other grave faults, but these stated are sufficient to condemn it. Instead of standing guard over the boiler, a sentry has to be set over it, and should he by accident, ignorance or negligence, not properly attend to his duties, the boiler is without any safeguard whatever. Hence the importance of any device which shall reduce the danger to a minimum. A safety valve which is automatic, certain in its action, prompt in opening and closing at the required point of pressure, and which can be fully relied upon to relieve the boiler under all circumstances, is what is necessary.

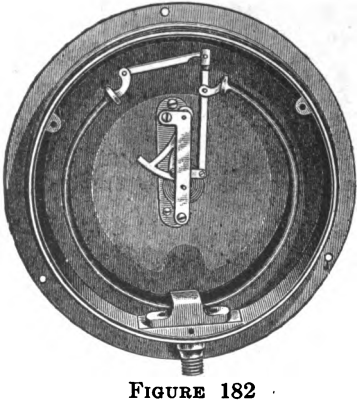

FIGURE 182
SECTIONAL VIEW
AMERICAN PRESSURE GAUGE

The Crosby Locomotive Pop Safety Valve. Fig. 186. *Description of the Valve.* The valve proper B B rests

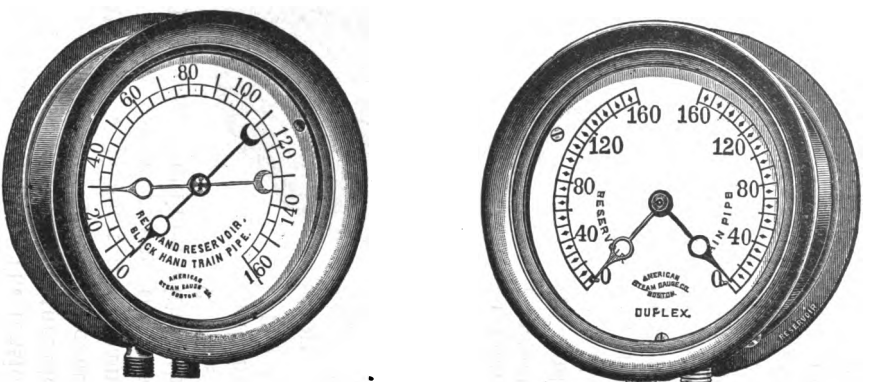

FIGURE 183

AMERICAN DUPLEX AIR-BRAKE GAUGE, WESTINGHOUSE STYLE

upon two flat annular seats V V and W W on the same plane, and is held down against the pressure of steam by the steel spiral spring S. The tension of this spring is obtained by screwing down the threaded bolt L at the top of the cylinder K. The area contained between the seats W and V is what the steam pressure acts upon ordinarily to overcome the resistance of the spring. The area contained within the smaller seat W W is not acted upon until the valve opens.

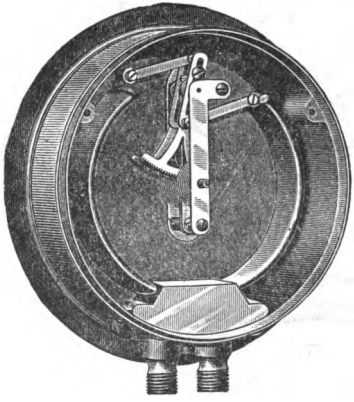

FIGURE 184
AMERICAN DUPLEX AIR-BRAKE GAUGE, WESTINGHOUSE STYLE

The larger seat V V is formed on the upper edge of the shell or body of the valve A. The smaller seat W W is formed on the upper edge of a cylindrical chamber or well C C, which is situated in the center of the shell or body of the valve, and is held in its place by arms D D, radiating horizontally, and connecting it with the body or shell of the valve. These arms have passages E E for the escape of the steam or other fluid from the well into the air when the valve is open. This well is deepened so as to allow the wings X X of the valve proper to project down into it far enough to act as guides, and the flange G is for the purpose of modifying the size of the passages E E and for turning upward the steam issuing therefrom.

Action of the Valve when Working under Steam. When the pressure under the valve is within about one

pound of the maximum pressure required, the valve opens slightly, and the steam escapes through the outer seat into the cylinder and thence into the air; the steam also enters through the inner seat into the well, and thence through the passages in the arms to the air. When the pressure in the boiler attains the maximum point, the valve rises higher and steam

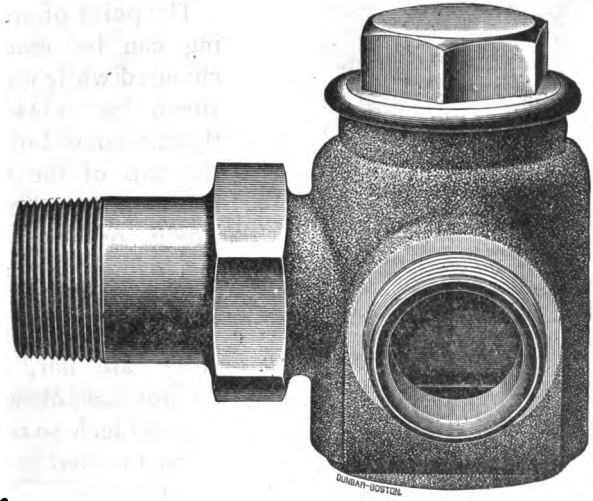

FIGURE 185

CROSBY SPRING-SEAT LOCOMOTIVE CHECK VALVE

is admitted into the well faster than it can escape through the passages in the arms, and its pressure rapidly accumulates under the inner seat; this pressure, thus acting upon an additional area, overcomes the increasing resistance of the spring, and forces the valve wide open, thereby quickly relieving the boiler. When the pressure within the boiler is lessened, the flow of steam into the well is also lessened, and the

pressure therein diminishing, the valve gradually settles down; this action continues until the area of the opening into the well is less than the area of the apertures in the arms, and the valve promptly closes.

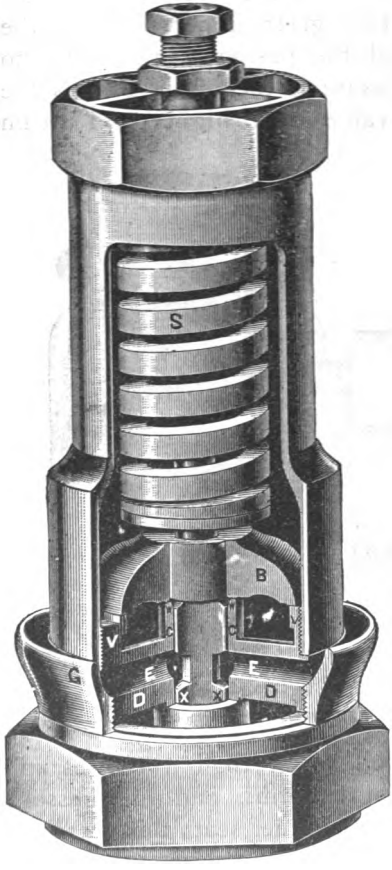

FIGURE 186
CROSBY LOCOMOTIVE POP SAFETY VALVE

The point of opening can be readily changed while under steam by screwing the threaded bolt at the top of the cylinder up for diminishing, or down for increasing, the pressure.

The seats of this valve are flat, and do not cut or wear out and leak so readily as beveled seats. The valve is made of the best gun metal.

Directions. *Setting.* Screw the head-bolt which compresses the spring up for diminishing, or down for increasing, the pressure, until the valve opens at the pressure desired, as indicated by the steam gauge;

secure the head-bolt in this position by means of the lock-nut; for regulating the loss of escaping steam, turn the screw ring G up for increasing, or down for decreasing it.

Caution. Care should be taken that no red lead,

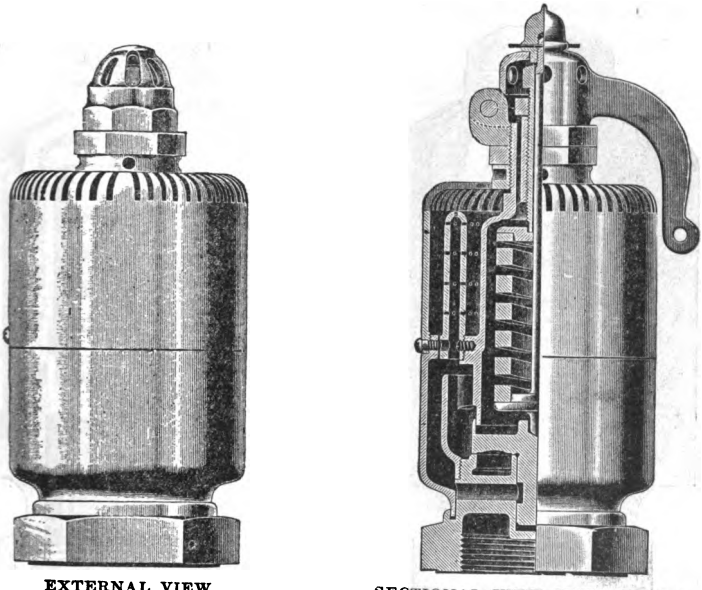

EXTERNAL VIEW

SECTIONAL VIEW WITH LEVER

FIGURE 187

CROSBY MUFFLED LOCOMOTIVE POP SAFETY VALVE

chips, or any hard substance be left in the pipes or couplings when connecting the valve with the boiler. Never make a direct connection by screwing a taper thread into the valve, but make the joint with the valve by the shoulder.

Repairing. This valve, having flat seats on the same plane, is very easily made tight if it leaks, by follow-

ing these directions, viz.: With an ordinary lathe slightly turn off the two concentric seats of the valve and valve shell or base respectively, being careful that this is done in the same plane and perpendicular to the axis of the valve. The valve will then fit tightly on

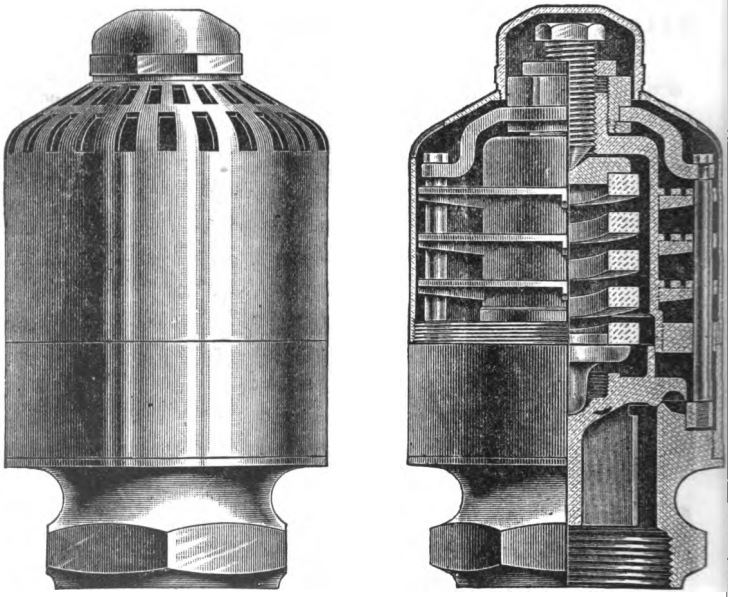

FIGURE 188

AMERICAN LOCOMOTIVE SAFETY VALVE

the valve shell. If no lathe is at hand, then grind the valve proper on a perfectly flat surface of iron or steel, until its two bearings are exactly on a plane and with good smooth surfaces; then take the shell and grind its seats in precisely the same manner; rinse both parts in water and put together, and the valve will be found to be tight; to ascertain when the bearings are

on the same plane, use a good steel straight edge. Do not grind the valve to its seats on the shell by grinding them together, but grind each part separately as above stated.

The Crosby pop safety valve and muffler combined, possesses outside means for adjusting or regulating it under changes of pressure, without disturbing its connections or parts.

American Improved Locomotive Muffled Pop Safety Valve. This valve has many new features, one of which is the manner in which it is adjusted; both the blowing-off pressure and the blow-down are adjusted from the top of the valve without removing the muffler casing—simply remove the small top cap. The blowing-off pressure is adjusted by means of a compression screw, the same as is used in all locomotive valves. The blow-down is adjusted by means of a hexagon nut just below the compression screw. This nut is connected by means of a yoke and standards to the relief ring, which is raised or lowered to adjust the blow-back where the case may require, the nut acting as a swivel. The same lock-nut locks both the compression screw and the blow-down nut, as shown in the sectional cut, Fig. 188.

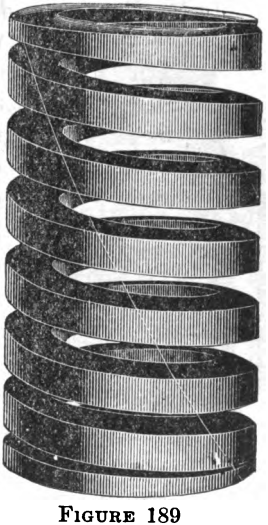

FIGURE 189
SPRING FOR AMERICAN LOCOMOTIVE POP VALVE

The noise of the escaping steam is lessened by the muffling device, as shown in cut.

Springs. These springs are made of the highest grade of steel, carefully tempered, and are ground square on the end. Each spring is tested to double its capacity.

Crane's Patent Improved Pop Safety Valves. Fig. 190. Their construction embodies a self-adjusting feature automatically regulating the "pop" of the valve; in other words, maintains the least waste of steam between the opening and closing points, an improvement which will be readily recognized, as there is no necessity of readjusting to regulate the "pop" on reasonable changes in the set pressure.

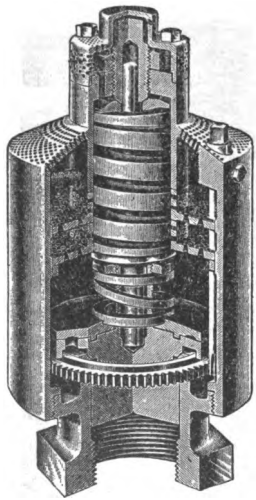

FIGURE 190
CRANE POP VALVE, SECTIONAL VIEW

This is more clearly explained, as follows: In all pop safety valves it is necessary to have a "pop," or huddling chamber into which the steam expands when main valve opens, thereby creating an additional lifting force proportionate to this increased area and greater than the force of spring, thus holding the valve open until pressure is relieved. Means must also be provided to relieve this "pop" chamber of pressure in order to allow the valve to close promptly and easily. This is accomplished by a self-adjusting auxiliary valve and spring, which are entirely independent of the main valve and spring; and to further explain their operation, the steam in "pop" chamber finds a passage through holes or ports into an annular

space provided in the auxiliary valve or disc, and by reason of the light auxiliary spring, this pressure lifts the auxiliary valve and allows the steam in "pop" chamber to gradually escape, thus permitting a greater range in setting pressures with the least waste of steam and at the same time supplying a cushion or balancing medium, thereby preventing any chattering or hammering and affording the easiest possible action in closing.

To change pressure, unscrew the top bolts and remove the cap, slacken lock nut; to increase pressure, turn screw plug down (to the right); to decrease pressure, turn screw plug up (to the left), then tighten lock nut.

Should the valve waste too much steam between the opening and closing point, turn the outside pop regulator to the left until the desired waste is obtained. Should it work too close, turn regulator to the right for greater waste.

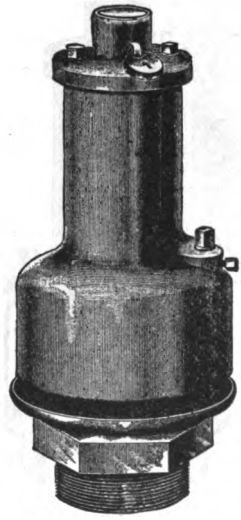

FIGURE 191
CRANE MUFFLED POP VALVE

Crane's Patent Locomotive Muffler Pop Safety Valve. Fig. 191. This valve is made with the outside "pop" regulator conveniently arranged at the top of the valve, for quick and easy adjustment, and while the boiler is under pressure.

TABLE 25

Size Valves, inches.....	2½	3	3½
Dome Connection, inches...	2	2½	3

The Kunkle Lock-Up Pop Safety Valve. Fig. 194. The pressure screw of this valve is made of hard tempered brass and can be removed at any time without being troubled with rust. The whole of the valve is made of brass throughout, with the exception of the pressure spring, which is made of the best steel and is thoroughly excluded from steam or dampness, making every part of the valve adjustable and free from rust. The spring is set between two tapered points, as will be seen by reference to open view. Another point in its favor is the uniform bearing of the valve upon its seat by reason of its long ribbed chamber, which guides the valve so accurately as not to allow it to cap on one side, thereby preventing the steam from cutting away the seat.

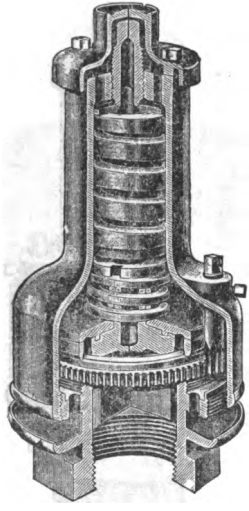

FIGURE 192
CRANE MUFFLED POP VALVE
SECTIONAL VIEW

The valve with its regulator can be adjusted to go off suddenly without a loud pop or without loss of boiler pressure.

The Kunkle Lock-Up Pop Safety Valve and Muffler Combined. Figs. 194 and 195. It relieves itself of all over-pressure, without raising above what it is set at; will close down upon its seat without losing any of the desired or fixed pressure, and by means of its lock-up device, so ingeniously constructed, all unauthorized persons are prevented from tampering with it. It is provided with a pressure screw with the tapering point resting in the

center of the top plate on top of the spring, and is locked with a key, and a jam-nut holding it firmly to is place, which makes it perfectly safe from being tampered with.

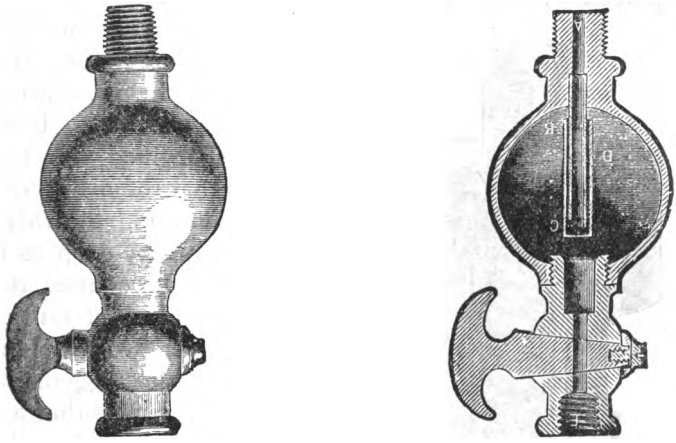

FIGURE 193

PRINDLE'S PATENT SYPHON COCKS

LUBRICATORS

In the "good old days," when tallow was the only known lubricant for the valves, it was one of the duties of the fireman on approaching a station or drifting down a hill, to seize the tallow pot and make a rush for the front end to oil the valves. This, with the weather at zero or below, was not a very desirable job, to say the least, and in course of time somebody thought out the plan of running pipes from the steam chests back to the cab, where they were fitted with a sort of funnel with a shut-off cock attached, and the

melted tallow was poured in there, and the vacuum in the valve chests when the throttle was closed caused the tallow to find its way to the valve seats. But, thanks to progress and invention, tallow has been displaced by refined cylinder oil, and the tallow cup has given way to the modern sight-feed lubricator; consequently the lubrication of the valves has been much simplified, for the reason that the oil is constantly entering the valve chests drop by drop as it should. Of course the lubricator may get out of order at times, or the oil pipes become clogged, but these are troubles that are easily overcome as a rule. A few of the leading types of lubricators will be illustrated and described.

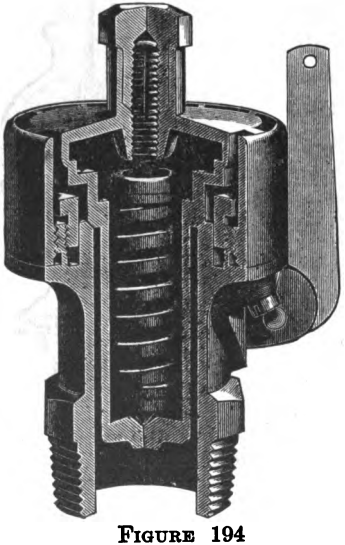

FIGURE 194

KUNKLE POP VALVE FOR PORTABLE AND STATIONARY BOILERS

The Nathan New Bull's Eye Lubricator. Fig. 196. *General Features.* The oil reservoir of the lubricator is of cylindrical form, which is generally acknowledged to be most suitable for high pressure.

The lubricator is provided with hand oilers for the cylinder feeds, and with gauge glasses which indicate when the reservoir is nearly empty.

The lubricator carries a reserve glass, packed in its casing, ready for use whenever occasion requires.

All glasses are packed in casings which screw into

the body, making their removal for inspection or repairs very convenient.

Directions for Application. 1. Secure the lubricator to boiler head or top of boiler, in the usual manner.

2. Connect for steam to fountain or turret, if large enough, otherwise direct to boiler. The steam pipe must not have less than ¾-in. I.D. when iron pipe is used, and not less than ⅝-in. I.D. when copper pipe is used. Steam valves and their shanks must have openings fully in accordance with these dimensions.

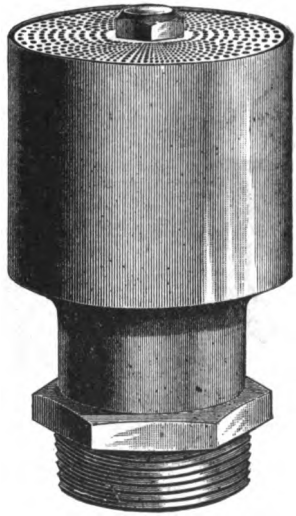

FIGURE 195
THE KUNKLE POP VALVE FOR LOCOMOTIVE BOILERS

3. Oil pipes must have a continuous fall towards the steam-chest, without any "pockets" in them.

Directions for Operation. Fill the cup with clean, strained oil through filling plug A, and immediately after filling, open water valve D. Open steam valve (not shown), wait until sight-feed chambers are filled with water, then start and regulate the feed by opening regulating valves C, more or less, according to the feed desired.

To stop either of the feeds, close the respective regulating valve C.

To renew supply of oil, close all valves marked C and valve D, draw off water at waste cock W, then fill the cup as before, and open water valve D, imme-

diately after filling, whether the feed is started again, or not.

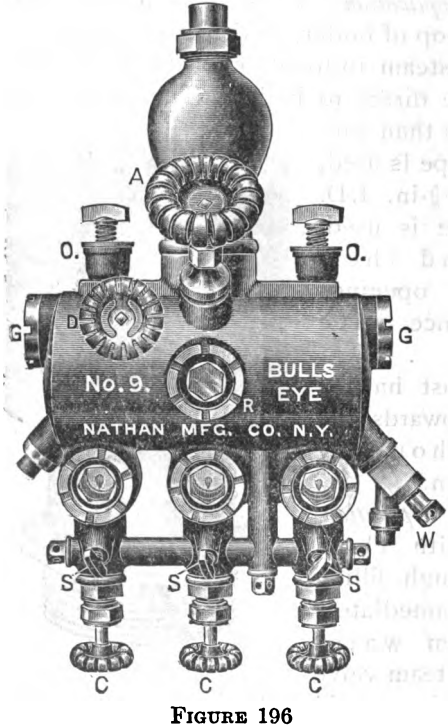

FIGURE 196
FRONT VIEW

To oil by hand, close the steam valve. Fill the hand oilers O, open the hand oiler valves, and when all the oil has entered the tallow pipes, close hand oiler valves and open steam valve wide.

Notes. 1. Always open the steam valve before the engine begins to do any work whatever, whether the feed is started right away or not, and keep it open as long as the engine is doing service of any kind.

2. Keep the water valve D always open, except during the period of filling the cup, as per direction.

3. Once in two weeks, at least, blow out the cup with steam, opening all valves wide, with the exception of the filling plug, which should remain closed.

4. When putting on the lubricator for the first time,

or after it has been off for repairs, "follow up" the packing nuts of the glasses, when the lubricator gets hot, so as to take up any "slack" caused by expansion. This will tend to keep the joints tight.

The Detroit No. 21 Triple Feed Locomotive Lubricator, with auxiliary oilers and gauge glass. Fig. 200.

This device is simple in construction and simple of operation.

The oil is maintained at a uniform temperature and will not chill.

The feed is absolutely regular.

All feeds are visible from two sides.

An additional valve has been placed at the top of the lubricator to control the supply of steam from the boiler, making the device self-contained.

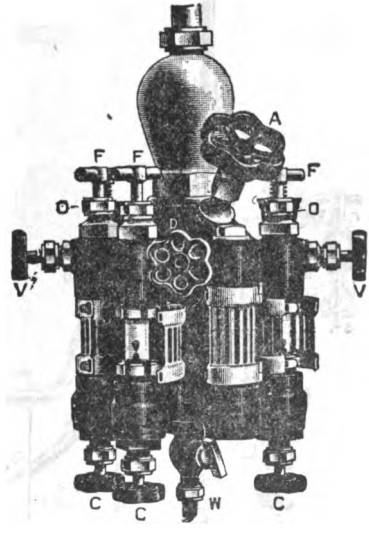

FIGURE 198
NEW NATHAN LUBRICATOR,
FRONT VIEW

Directions for Operating. When the lubricator is first applied, blow out thoroughly, then close all the valves.

To Fill. Remove filler plug O and fill the reservoir with clean, strained oil.

Steam Valve. The regular boiler valve should be left wide open, and the steam valve B at top of condenser

must also be kept wide open while the locomotive is in service.

To Start Lubricator. 1. Be sure that the regular boiler valve is open. Then open steam valve B at top of condenser gradually until wide open and keep wide open while lubricator is in operation. Allow sufficient time for condenser and sight-feed glasses to fill with water. 2. Open water valve D. 3. Regulate flow of oil to right and left cylinders by valves E E, and to air pump by valve L.

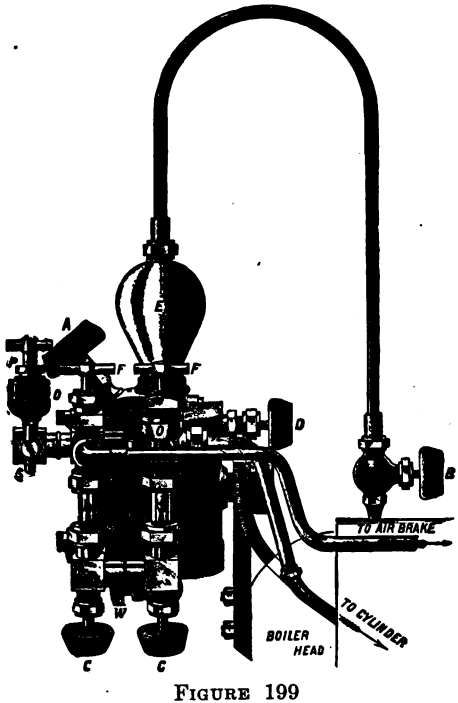

FIGURE 199
NEW NATHAN LUBRICATOR
SIDE VIEW WITH STEAM AND TALLOW PIPES

To Operate Auxiliary Oilers. See that valve H is closed. Then open valve X and fill body of oiler. Close X after filling and open valve H.

To Refill. Always close valves E E and L in advance of valve D. Open drain plug G, then filler plug O. Refill and proceed as before.

Immediately after filling the lubricator do not fail to open the water feed valve D, in order to prevent any excessive pressure due to the expansion of the heated oil.

Getting New or Rebuilt Locomotive Ready for Service. In getting a new or rebuilt locomotive ready for service, disconnect oil pipes at steam chest, and blow out thoroughly both oil pipes and automatic steam chest valves; also disconnect coupling to air pump and see that choke is free.

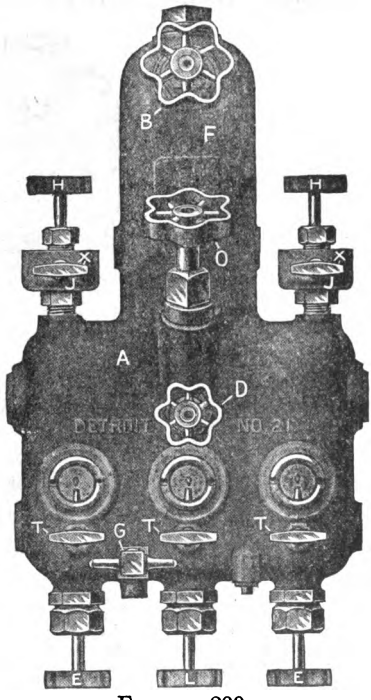

FIGURE 200
THE DETROIT NO. 21 LOCOMOTIVE LUBRICATOR

Steam for lubricator should be taken from turret if large enough, or from dome through an independent dry pipe of 1-in. iron pipe size or its equivalent.

When the No. 31, or four-feed lubricator is applied to the Vauclain type of compound, the two outer feeds are intended for the high-pressure cylinders. Two automatic steam chest plugs are furnished, stamped and tagged "H.P.," having $\frac{3}{32}$-in. chokes. The two remaining feeds lead to the low-pressure cylinders, and two other automatic steam chest

plugs are furnished to be used with them, stamped and tagged "L.P." and having $\frac{1}{16}$-in. chokes.

Helpful Hints. *Blowing Out.* Blow out lubricator once a week.

Filling. If there is not sufficient oil to fill the lubri-

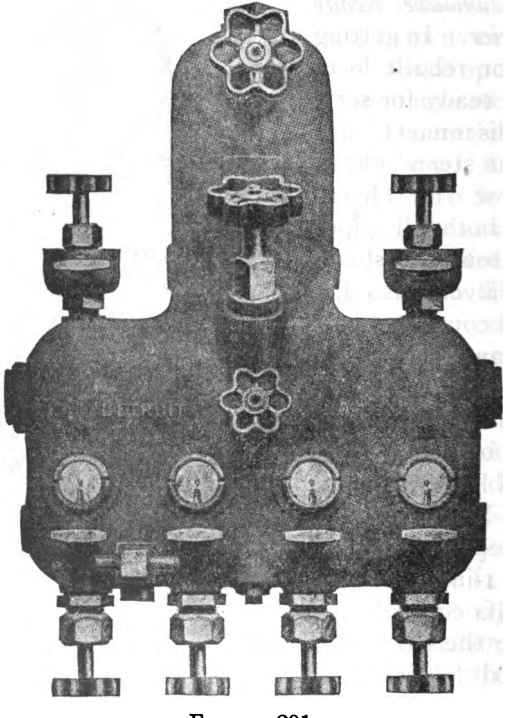

FIGURE 201

DETROIT 4-FEED LUBRICATOR

cator, always use water to make up the required quantity. This will enable the feeds to start promptly.

The steam valve B must be opened wide when the locomotive is in service to allow condensation to enter

the condenser; otherwise condensation will be diverted to equalizing tubes. The feeds will gradually slow down as the water of condensation decreases.

When getting a new or rebuilt engine ready for service or when using soda ash boiler compounds, or when running in bad water districts, impurities will be carried over into the condenser and will gradually accumulate at base of water valve until the water is completely shut off. While this is taking place the feeds are affected the same as before described, and when this passage is finally closed by the sediment the feeds will cease altogether.

How to rectify while locomotive is in service: Close all feeds and water valve; open drain cock 2105 and allow about ½ pint of water to drain off; close drain cock and open water valve quickly. The condenser pressure will then force this sediment into bottom of lubricator, where it can be blown out in the usual manner, when the lubricator is empty.

Do not screw up too tightly the feed glass follower, as this will only serve to injure the packing. There is no danger of leakage at this point, as the glass and packing are so designed that the greater the pressure the better the joint.

Small Drop of Oil. The cause of a small drop of oil or the variation of size of drop during a trip. In alkali, salt water or oil well regions through which railroads pass, the water supply becomes impregnated with saline matter. This saline matter is carried over in the lubricator mechanically by the steam, so that the water in the sight feed glasses contains considerable of it and the amount increases as the locomotive proceeds on the trip until it crystallizes around the feed cones, thus gradually diminishing the size of the open-

ing for the drop. Should the engineer undertake to force the feed it will result in the oil flowing in a very slender stream, scarcely perceptible. If this condition is not corrected the salt crystals will completely close the feed cone orifice.

How to Rectify. Close all feed stems; open all sight feed drain stems and blow out thoroughly. The action of the steam on feed cones will dissolve the salt crystals. Allow reasonable time for condensation; start the feeds, and the drop of oil will be normal.

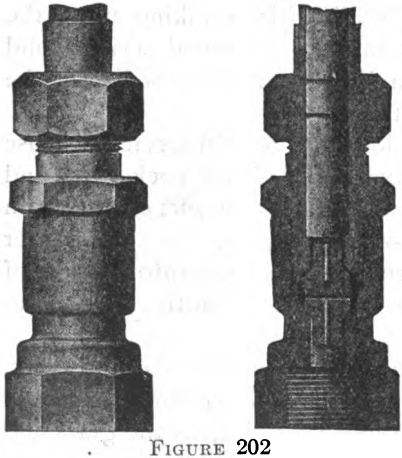

FIGURE 202
AUTOMATIC STEAM CHEST PLUGS AND VALVES

Air Bound. This condition is almost invariably brought about whenever it becomes necessary to fill a lubricator on the road. The temperature of a lubricator at such times is very nearly that of the steam pressure temperature. Sometimes the water feed valve seat may leak, and in order to fill the lubricator in this heated condition it is found necessary to shut off all steam pressure to the lubricator, including the air pump, and owing to the high temperature of the condenser the water flashes into steam, practically emptying the condenser and feed glasses of all water. The oil reservoir being very hot, the oil expands rapidly and the filler plug is usually put in

before the reservoir is full. The steam and water pressures are hurriedly turned on and the feeds are opened before sufficient time has elapsed for sufficient condensation to accumulate. The feeds will not respond under such conditions, because the positive and negative pressures have equalized, and the lubricator is said to be air bound.

How to Overcome. Open all feeds and any one of the sight feed drain stems. This will allow the water in the oil tubes and the air occupying the highest space in the oil reservoir to escape to atmosphere.

The New Nathan Triple Sight-Feed Locomotive Lubricator. *Directions for Application.* 1. Secure the lubricator to boiler head or top of boiler by a strong brace, in some such form as illustrated. Fig. 197.

2. Connect top of lubricator to dome, top of boiler or bridge pipe by copper or brass tubing, which must not be less under any circumstances than $\frac{5}{8}$-in. inside measurement.

3. Connect the oil or tallow pipes to the union couplings on top brackets of the lubricator. The elbow on the top front bracket on right side is for the oil pipe to the air brake pump.

4. Remove valves from plugs over steam chests in order to maintain proper lubrication when steaming.

The sight-feed and gauge glasses of these lubricators are provided with proper shields and protectors, to prevent the flying of particles in case of a broken glass.

Directions for Use. Fill the cup with clean, strained oil through the filling plug A, and immediately after filling, open the water valve D. Open the steam valve B, and start to regulate the feed by opening the regu-

lating valves C more or less, according to the quantity desired.

To stop either of the feeds, close the respective regulating valve C.

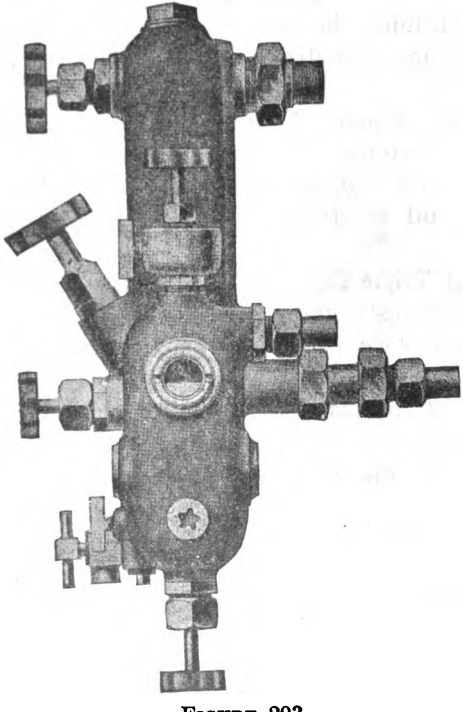

FIGURE 203
DETROIT No. 21, SIDE VIEW

To renew the supply of oil, close all the C and D valves, draw off the water at the waste-cock W, then fill the cup as before and open the water valve D immediately after filling, whether the feed is started again or not.

Notes. 1. Valves F F F must be always kept open except when one of the glasses breaks. In such case close valves C and F belonging to the broken glass and use the auxiliary oiler O on that glass on down grades, as a common cab oiler.

The breaking of one glass does not interfere with the proper function of the others.

2. Always open the steam valve before the engine

begins to do any work whatever—whether the feed is started right away or not, and keep it open as long as

ervice of any kind.

r valve D always open except filling the cup, as per directions.

ɛks at least, blow out the cup with es wide, with the exception of the ould remain closed.

ICAL BELL RINGERS

ngers are no longer a luxury—

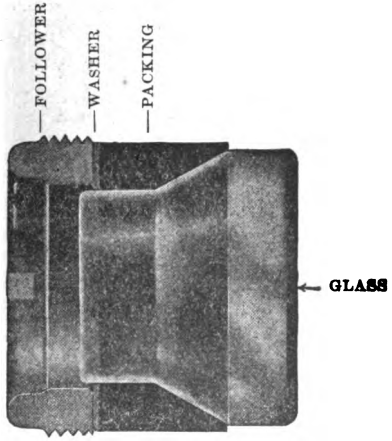

IGURE 204.—DETROIT LUBRICATOR GLASS AND METHOD OF PACKING
DIRECTION OF PRESSURE INDICATED BY ARROW. THE HIGHER THE PRESSURE THE BETTER THE JOINT

taken from his ... —cannot be with safety.

The Sansom Bell Ringer, Fig. 205, lays claim to the following merits:

Has no packed joints except the piston, which has heavy, leather packing.

begins to do any work whatever—whether the feed is started right away or not, and keep it open as long as the engine is doing service of any kind.

3. Keep the water valve D always open except during the period of filling the cup, as per directions.

4. Once in two weeks at least, blow out the cup with steam; open the valves wide, with the exception of the filling plug, which should remain closed.

MECHANICAL BELL RINGERS

Locomotive bell ringers are no longer a luxury—they are a necessity.

The duties of the fireman, who used to ring the bell, have increased with the increased size and speed of locomotive. A man furnishing coal to an up-to-date fire-box has little time to do much else when the machine is in motion.

The engineer's attention must not be taken from his work—cannot be with safety.

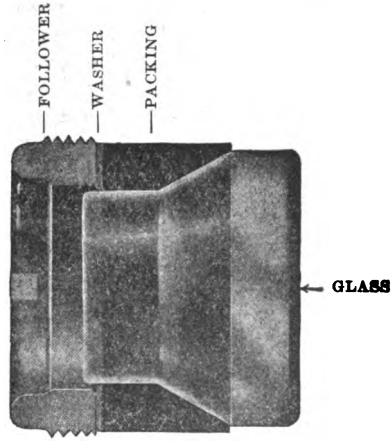

FIGURE 204.—DETROIT LUBRICATOR GLASS AND METHOD OF PACKING
DIRECTION OF PRESSURE INDICATED BY ARROW. THE HIGHER THE PRESSURE THE BETTER THE JOINT

The Sansom Bell Ringer, Fig. 205, lays claim to the following merits:

Has no packed joints except the piston, which has heavy, leather packing.

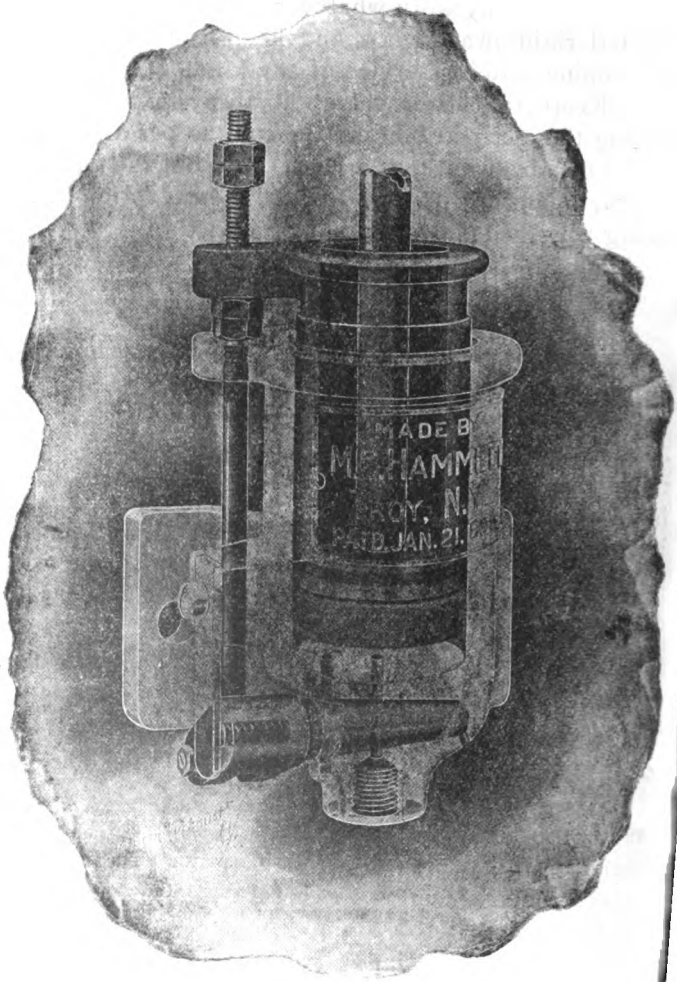

FIGURE 205

SANSOM BELL RINGER

Valve is a plug cock held to seat by a coiled spring.

Economical of air, because weight of bell compresses air in the cylinder almost to lifting point before admission.

Easily regulated to ring at any speed simply by control of air supplied.

FITTINGS

Patent Steam Sanding Apparatus for Locomotives Fig. 206. (Nathan Mfg. Co., New York.)

Description. The ordinary methods for sanding the track in front of locomotive wheels being imperfect and unreliable, this apparatus has been designed with the view of obviating that difficulty and of greatly increasing the adhesive and tractive power of locomotive engines. This is effected by means of a combined jet of steam and sand projected to the point of contact between the driving wheels and the rails.

The advantages of the apparatus are:

1. The certainty of delivering sand at the proper point between the wheels and rails.

2. Saving in sand by being able to regulate the quantity delivered according to existing necessities.

3. Dispensing with rods and levers for working sand gear.

4. Capability of being applied to present sand boxes without any alteration.

5. Simultaneous delivery of sand at the point of contact for both wheels, whereby the liability to injure the crank, driving axles and coupling rods is greatly reduced.

6. Additional train resistance avoided, as no superfluous sand is left on the rails as by the old method.

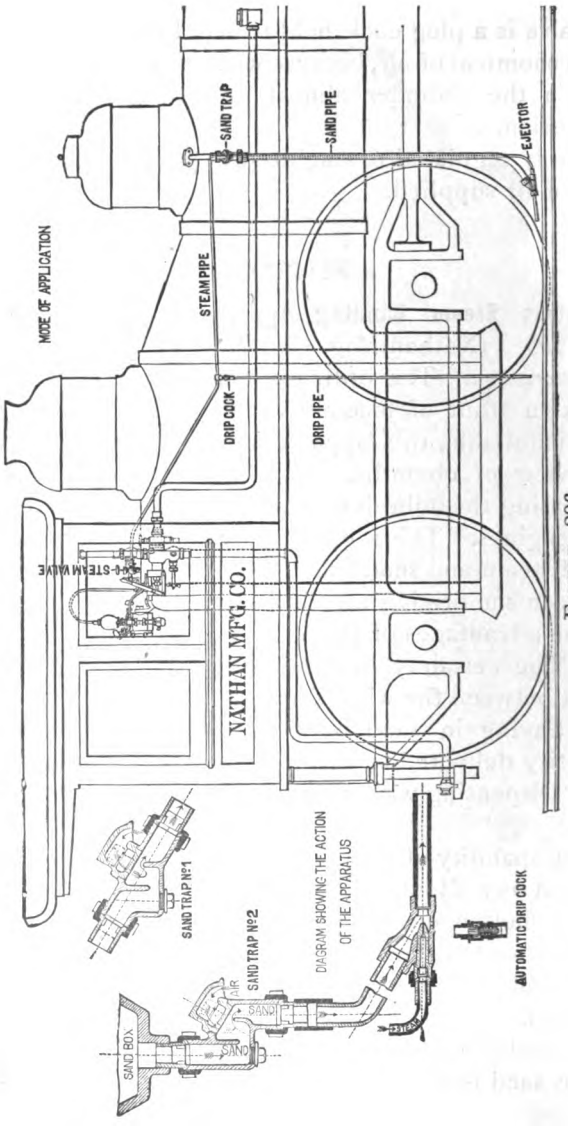

FIGURE 206

STEAM SANDING APPARATUS

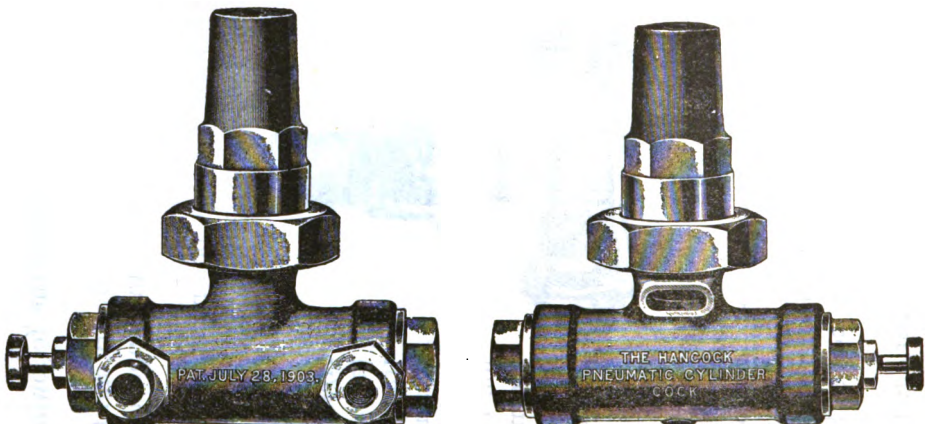

FIGURE 207

BACK VIEW FRONT VIEW

HANCOCK PNEUMATIC CYLINDER COCK

7. Economy of steam; there being no slipping or unnecessary revolving of locomotive wheels in starting engine.

To obtain these advantages the following directions must be strictly adhered to:

1. The sand must be absolutely dry and finely sifted. Stones cannot pass through the apparatus, but will stop its proper function.

2. The cover of the sand box must be water-tight, to prevent the sand from getting wet by rain or snow beating in.

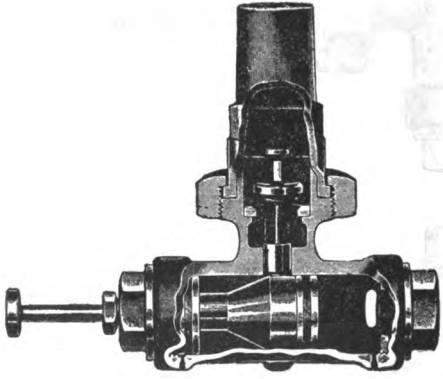

SECTIONAL VIEW

FIGURE 208

HANCOCK PNEUMATIC CYLINDER COCK

Directions for Application. Attach the sand trap to sand box or sand pipes by means of the union couplings in the most convenient position; the plug P must point straight downward and the air snout S must point in the direction of the delivery.

Connect the ejector to sand pipe in such a way that the blast will strike in about the center between tire and rail.

Attach the steam valve to dome, bridge pipe or other high place on boiler.

Connect the automatic drip cock to steam pipe and make the steam pipe to incline towards the drip cock

in both directions, as illustrated. This will lead the condensed water, resulting from a leakage of the steam valve, down the drip pipe and thus prevent the freezing of the ejector pipe in cold weather.

Branch off the steam pipe to the ejector on each side of engine at a point between ejector and drip cock. The standard connections are made for 1-in. iron pipe for the sand traps. The steam pipe should be $\frac{3}{8}$-in., and connections on ejector and drip cock will be furnished blank or cut for $\frac{3}{8}$-in. iron, or drilled for $\frac{1}{2}$-in. copper, according to orders. The bottom of the drip cock is tapped for $\frac{1}{4}$-in. drip pipe.

The traps are made in two forms.

Trap No. 1, for oblique position, is most suitable for direct connection to sand box placed on top of boiler.

Trap No. 2, for vertical position is most suitable for connection to sand box placed on or below the running board.

Directions for Use. To start, open steam valve.

To stop, close steam valve.

One complete set of the single apparatus, for sanding in one direction, consists of one steam valve; one drip cock; two traps and two ejectors.

One complete set of the double apparatus, for sanding in both directions, consists of one double steam valve; two drip cocks; four traps and four ejectors.

The Hancock Pneumatic Cylinder Cock. Fig. 207. The Hancock pneumatic cylinder cocks are operated by air instead of the usual sliding bar with the connections to the cab. These cocks are composed of a small cylinder with a piston under each valve which is similar to the ordinary cylinder cock valve The piston is provided with an incline similar to the usual incline on the bar which lifts the valve, which is

very similar to the ordinary cylinder cock valve. The movement of this piston back and forth opens and closes the valves. Air is admitted to each cylinder through a ¼-in. pipe, making four ¼-in. pipe connections to each cylinder of an engine. These are con-

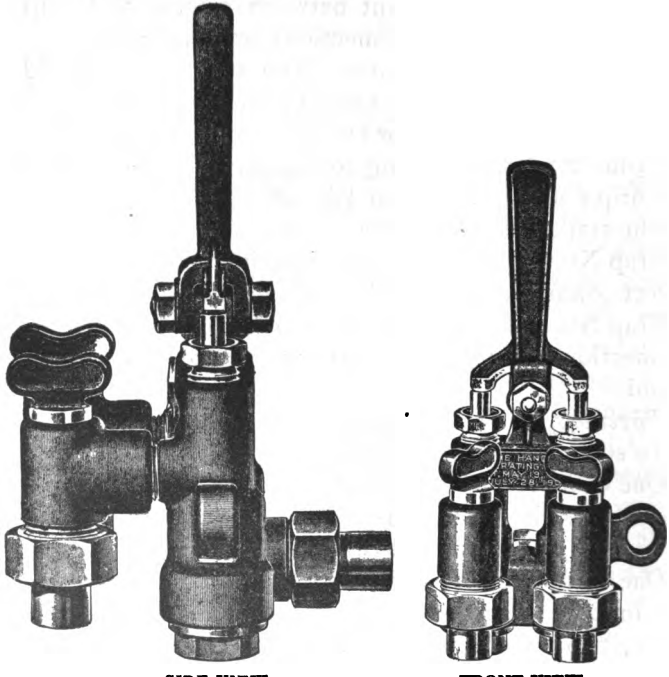

SIDE VIEW FRONT VIEW

FIGURE 209

OPERATING VALVE FOR CYLINDER COCK

nected to two ⅜-in. pipes run under lagging and connected to the operating valve in the cab. One of these pipes connects with the closing end of each cylinder cock. The other pipe connects with each

opening end of each cylinder cock. The operating valve is also connected by one ⅜-in. pipe to the main reservoir.

To operate the cylinder cock, the operating handle or lever is pulled in one direction to open, the opposite direction for closing.

Each end of each cylinder cock is provided with a small hole which allows for the exhausting of all the air after it has thrown the piston in either direction. A hole also in center allows for any condensation or drip that may enter the cylinder when the cylinder cocks are open.

The operating valve is a very simple device, opening with a lever against a pressure of air and closed by pressure of air aided by a spring under each valve, and it has been found in practice that by opening and closing the operating valve, no matter how quickly, it will effect the purpose, and a very small quantity of air is consumed.

The two pipe connections on the operating valve leading to the cylinders are provided with a plug, which can be unscrewed by hand if occasion requires, and a small amount of kerosene or signal oil introduced, the plug screwed up and this oil blown through the pipe and valves for the purpose of cleaning, and will do it very effectually.

The illustration shows how the cylinder cocks and operating valve, Fig. 210, are located and piped.

Boiler Washing and Testing Apparatus. The new Rue washing and testing apparatus, will wash out, fill, and apply pressure to a boiler, with hot water. It has a capacity of 5000 gallons per hour.

When this apparatus is used, the boilers are washed much more effectually than can be done with cold

FIGURE 210

THE HANCOCK CYLINDER COCK AND OPERATING VALVE

water, and their temperature is not materially reduced.

It enables one to blow out, wash and fill with hot water and have engine ready for service within one hour, without injury to the boiler.

When applying pressure, this apparatus will produce and maintain from three to five times the amount of steam pressure used in operating it

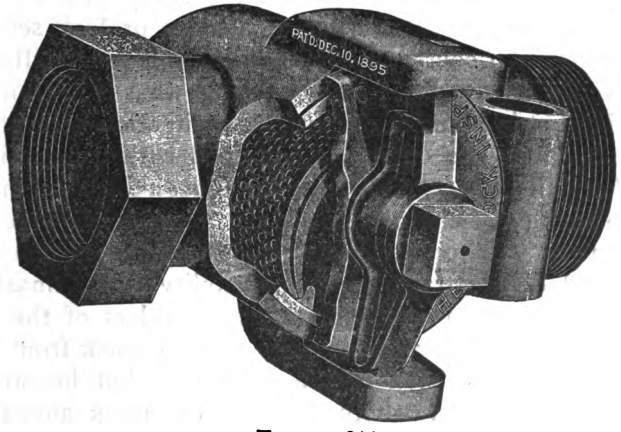

FIGURE 211
HANCOCK LOCOMOTIVE HOSE STRAINER

Keeping cock to the pressure gauge partly closed will prevent the hand from unduly vibrating.

One of the Many Ways It May Be Located. Take cold water to the apparatus out of, and put hot water back into, the pipe that supplies water for washing with cold water, always putting in a stop valve or cock between the connections. The hot water from the apparatus will pass with great force through the same pipe, hose, nozzles, etc., as are used with cold water.

This apparatus has connection for 2-in. pipes, and must be located where the water will flow to it.

THE ELECTRIC HEADLIGHT

A good headlight is a very necessary part of the equipment of a locomotive. It matters not how well the engine and train may be equipped with the air brake and other safety devices, if the man at the throttle does not or cannot see the danger ahead in time to apply the "air" and make the stop, the result is going to be a disaster of a more or less serious nature. Of course, by daylight there is practically no excuse for the engineer not seeing what is in front of him, but in hours of darkness the situation is reversed and unless the engine is equipped with a headlight that will project the light a far enough distance ahead to enable the engineer to see the impending danger in time to stop, or at least to considerably slacken the speed of the train, the responsibility for a smashup should not rest wholly upon the shoulders of the engineer. He may know every foot of track from one end of the division to the other end, but he cannot know intuitively whether or not the track ahead of him is clear and safe, except he can see it.

The ordinary oil head lamp falls far short of the requirements of a good headlight, and, until inventors shall succeed in perfecting a headlight that will illuminate the track ahead of the engine for a sufficient distance to cover the number of yards distance required in which to make a stop, the problem of the safe running of trains at night will remain in an unsolved state. There is but one device that appears to offer a solution of this most important question, and that is the electric headlight. Inventors have been striving for quite a numbers of years to bring out a reliable and efficient light of this kind, and although

the process of development has been slow, still progress has been made, especially since the steam turbine has become available for operating the small dynamo or generator required to furnish the electric current needed. There is no doubt that the electric headlight will in time take its place as an element of safeto, second only to the air brake in the running of railway trains. In order that the reader may get at least an idea of what is being acccomplished along this line, the author presents the following information, descriptive and otherwise, together with illustrations.

The Pyle National Electric Head Light Company of Chicago are the makers of a light that appears to be deservedly working its way to the front, there being now about five thousand of their headlights in use, with a growing demand for more.

The device may be located either on the front end of the engine forward of the stack, or the generator may be located on the left side just in front of the cab, while the lamp will occupy the usual position in front of the stack. Figure 212 shows the complete outfit on the front end ahead of the stack, and figure 213 shows the generator located on the boiler just in front of the cab.

Instructions for Applying the Equipment. If it is to be placed on the front end as shown in Fig. 212, measure the depth of the headlight case to be used and add 18 inches to this measurement. Then have a baseboard made, using these measurements for the length of board, and make the breadth the standard width for oil headlights. Bend a piece of $\frac{3}{4}$ by 3 in. iron flat ways "U" shaped, making center of iron come over the center of brackets on engine and make the length about two inches shorter than the base-

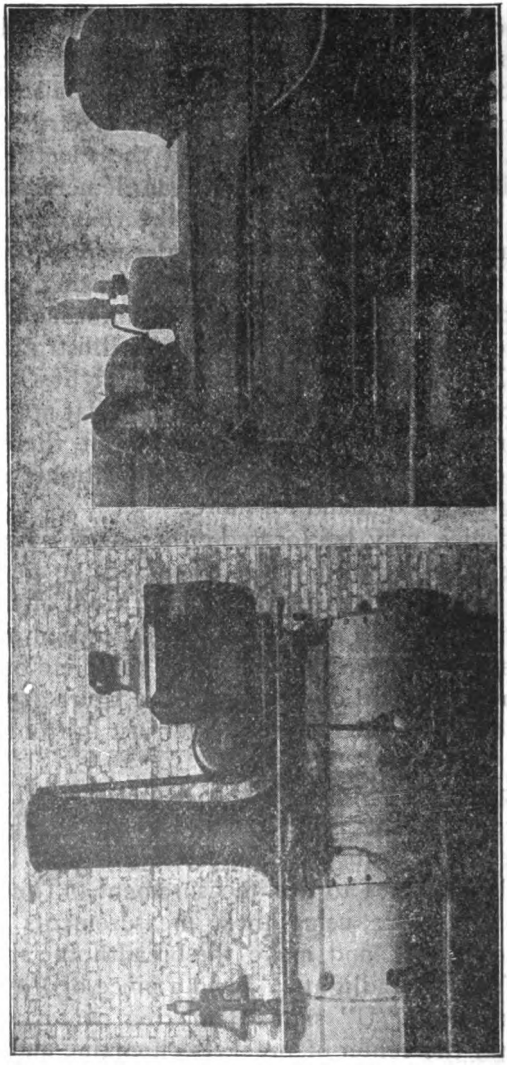

FIGURE 213

FIGURE 212

board. Place this iron "U" on the brackets within about two inches from the stack and mark for bolts through brackets.

Put baseboard on the iron "U" so the back edge will just clear the stack, and bolt to brace. Place the equipment on the board, with dynamo on the left side of locomotive and as near the back edge of board as possible, and bolt to board. Then bolt the headlight case to board in front of equipment. Put a ¾-in. angle valve in the highest part of the boiler in the cab with dry pipe, and run a ¾-in. pipe from this valve under the jacket on right side of the boiler to the equipment. Use 1½-in. pipe for the exhaust, running it through the arch and have end of pipe about flush with the top of the nozzle tips of the locomotive. Use 2-in. pipe inside the arch, as it reduces noise and does not act on the fire.

If the equipment is to be located on the boiler just in front of the cab take up back sheet of jacket and fasten two brackets to boiler suitable for holding the equipment crosswise of boiler. Have a baseboard (iron or wood) made and bolt to braces, then place equipment with the dynamo on left side of locomotive and bolt to base.

If steel or iron baseboard is used, the equipment should be insulated from base by wood or asbestos sheet. Place a ¾-in. angle valve in the highest part of boiler in the cab (with dry pipe) and run a ¾-in. iron pipe to the equipment. Run the 1½-in. exhaust pipe up above cab or down to running board and into arch. Run the lead wires through an independent pipe if possible or through the hand railing, being sure to insulate them carefully to prevent chafing, etc.

To apply the lamp to the reflector and case, remove the oil tank and all supports and guides from the reflector. Cover the board holding the reflector with tin, having the edges turned up about one-half inch. This prevents sparks from the lamp from setting fire to the oil-saturated board. Secure the support for the back of the reflector to the lamp board on right-hand side, and adjust the screw until the reflector stands level. Remove both carbon holders from the lamp and set the lamp on the board, on the side nearest door of case, then put bottom holder in lamp and place the lamp on the board with copper electrode in center of hole in reflector, being sure to have base of lamp square with reflector slide. Mark for holes in center of large square holes in base of lamp and bore for $\frac{5}{8}$-in. bolts.

Secure the small wires for the incandescent lamps by the small screws at the right of brush holders. Run the incandescent wires through the hand railing to the cab, in wood strips. Run wires for cab in wood strips. Wind all the joints with tape.

The electric headlight equipment complete consists of engine, dynamo and lamp, and material for three incandescent lights in cab.

The Engine. The engine is known as the Pyle compound steam turbine. There are no wearing surfaces inside the engine requiring lubrication, hence they do not use any sight feed lubricator in the cab. Before starting the engine be sure the casing is thoroughly drained, and do not turn on steam too suddenly in starting the light, thus allowing time for the condensation to get out of the engine. It must have dry steam.

Remove plug in top of engine once each week and

pour in a little black oil. This will prevent corrosion of parts. The inside bearing only needs enough oil in the well for the loose ring to touch the oil and carry up on top of the shaft. If there is too much oil, it will be thrown out of the ends of the cellar by the motion of the locomotive, which may ruin the armature. The oil well for the outside bearing should be filled each trip. Use valve or cylinder oil in these bearings.

The Dynamo. The dynamo is constructed on the latest scientific principles, and the electrical balance is so perfect that no sparks should be seen at the brushes. The armature is held in place on the engine shaft by one screw which can be easily taken out if occasion demands. The brush holders are fixed, and the brushes can be taken out and replaced without changing the tension of the springs. A graphite brush is used for the top and a carbon brush for the bottom, and a few moments' care each trip is all that is required.

The mica between the copper strips of the commutator should always be a trifle below the surface. If it gets too high, file it down with a small file. Do not get it too low, as it will collect dirt, etc., and cause a short circuit. The commutator should be cleaned each trip with a damp piece of waste (not wet), rubbing endwise so as to keep the creases clean where mica is filed out.

Be sure and have the brushes fit perfectly on the commutator. If there is poor contact brushes will spark. If commutator is running out or has the appearance of getting rough, clean it up. To do this nicely, remove brushes and hold a strip of No. 0 sandpaper (not emery paper) on the commutator while

running (see Fig. 214). Don't press the sandpaper on, for if there are any low spots they will increase in size.

If the brush tension spring is too tight, it creates friction, heat and unnecessary wear, both on the commutator and the brushes. If too loose it will spark and commutator will not run clean. Have it just tight enough to prevent sparking. In this case a little judgment must be used, for if the brushes are not in the proper condition, or commutator smooth and true, there will be sparking at the brushes, no matter how much pressure is used. Do not forget that the commutator is the vital part of all dynamos, and none will run successfully without regular care and attention. The voltage of the dynamo is entirely too low to force a current through any portion of the human body, so it may be handled freely and without any possible fear of being injured by it. It only requires a few moments' attention each day to keep the plant in perfect condition.

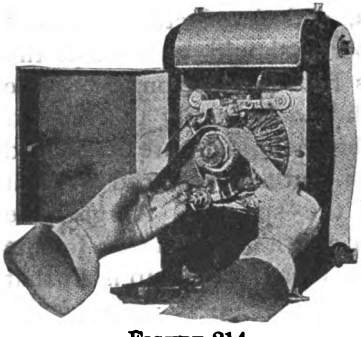

FIGURE 214

If the commutator becomes rough or out of round, it should be trued up in a lathe. The tool used must be very sharp, and light cuts must be taken, then polish it with fine sandpaper. It must be carefully examined to see that no two sections touch, as the copper is liable to lag or burr from one section to the other, and before putting it back, it would be better to cut or file the mica (between each section) a little below the sur-

face, for it does not wear away as fast as the copper, and if the mica is not cut away it may lead to sparking. After doing this, be sure no ragged edges of copper stick up, for this will cut away the brushes rapidly. The speed of the armature should be as near 1,800 revolutions per minute as possible, unless the copper electrode burns off, when it should be reduced until the copper electrode does not burn.

The Lamp. (Fig. 215)—is simple, durable and reliable, and after a few trials it becomes an easy matter to trim the lamp in the dark, should occasion demand. In putting in the top carbon, it is much better to remove the carbon holder from the slide. After securing the carbon in the holder, take it between the thumb and forefinger and with the remaining fingers resting on the guide put it in place. If desired to clean the reflector remove only the top guide by loosening the thumb nut at the end of the upper arm, then remove the guide carbon and carbon holder.

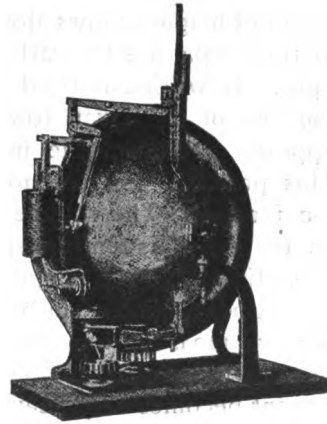

FIGURE 215

The tension spring in the lamp is for two purposes. It brings together the points of the carbons, so as to establish the arc when the dynamo is set in motion, for there must be a complete circuit before there is any current. If the carbons are separated only a small fraction of an inch, the lamp will refuse to work,

because the current will not jump across the separation. Sometimes there will be a deposit of scale on the point of the lower copper electrode which prevents the top carbon touching the copper, and as the current will not go through this scale there will be no light until this is removed. See that the point of copper is clean before each trip. Suppose all wires are connected and the lamp properly trimmed, turn on steam and set the armature in motion. The current enters the lamp and passing through or around the solenoid magnet draws down the iron armature. This in turn separates the carbons, thus forming the arc or light. It will be noticed that the spring is secured to the end of the lever toward the carbons, or on the opposite end from the magnet and pulls against it. This prevents the solenoid from pulling the carbon too far apart. The volume of light will depend largely on the way this tension spring is regulated. It may be so tight that the magnet will be unable to separate the carbons, consequently there will be no light. If the dynamo is run too long with the lamp in this condition it will burn out the armature or the fields, for the current becomes very heavy.

If the tension spring is very loose, the lamp will flash and go out, for the magnet will be drawn down too far. When the light goes out the current is broken, and there being no strength in the magnet, the spring will again bring the carbons together, then the current is instantly re-established. Adjust the spring so the lamp will flicker just a little, when the locomotive is at rest.

The wires leading back to the incandescent lamps may come together, causing a short circuit. This will put the light out. When this occurs the dynamo will

be generating a heavy current, the speed will be quite low, and there will be a small light in the lamp. In this case just disconnect one of the small wires from connecting screw, then look for the cause of the trouble.

Most of the troubles are traceable to the adjustment of the lamp.

The magnet yoke may travel too far sometimes and strike the small lug on frame of lamp before carbons are separated sufficiently to make a proper arc. In this case the wire should be shortened so that the magnet yoke is about half way down before the clutch grips carbon.

If the wire is too short the lamp will jump or the carbon will stick in the clutch.

If the carbon feeds too fast the top clutch spring is too weak and should be given more tension. To do this, remove cotter pin and get top-clutch spring out of casing. Then pull it out a little, thereby giving it more "set."

If the light burns green the dynamo is running too fast and the speed should be reduced.

This can be stopped on the road at once by throttling the steam in the cab. There is another reason for light burning green. The main wires from the dynamo to the lamp may be connected wrong, therefore one wire should have a sleeve on each end large enough to prevent its going into the binding post with the small hole. The other wire should have plain ends.

The lamp can be moved in all directions for focusing. To get the proper vertical focus on the track, either to have the light close to you or to strike the track far ahead, loosen the set screw on the side, and by turning the adjusting screw the lamp can be

raised or lowered as desired. To move it sideways, backward or forward, loosen the hand nuts and the lamp is free to move.

When once in focus there is no need of changing it again. Tighten all screws.

The back of the reflector is supported by an adjustable step, with a screw to raise or lower it, so the volume of the light will come out in parallel lines.

Focus Lamp. 1. Adjust back of reflector so front edge will be parallel with front edge of case.

2. Adjust lamp to have point of copper as near center of reflector as possible.

3. Have carbon as near center of chimney hole in reflector as possible.

4. Have locomotive on straight track and move lamp until best results are obtained on track. The light should be reflected in parallel rays and in as small a space as possible.

To lower light on track, raise lamp. To raise light on track, lower lamp.

If the light throws any shadows it is not focused properly.

If light is focused properly and does not then strike center of track do not change focus, but shift entire case on base board.

Point of copper should be about one inch above top of holder. If it is higher than this there will be too much heat on clutch.

To Roundhouse Men. A centrifugal brake is placed on back side of spoke of wheel and should be set so as to act at about 100 revolutions per minute more than where the governor acts, so that, if for any reason, the governor fails to act, this brake will check the speed and hold it at any speed at which the brake

is set. The application of this brake commences with equipment No. 2,600, but cannot be applied to equipments with serial number lower than that

To adjust centrifugal brake, remove the armature and cap to the engine, pull out wheel and shaft when there will be free access to brake. If it is desired to adjust brake so that it will act at a higher speed, turn nuts to right, being sure to adjust both brakes the same, then tighten up jam nuts. One-half turn of the nut will change the speed at which the brake will act about 150 revolutions.

The governor should be examined once each month, and if the plungers are found cut they should be ground in or faced off as the case requires. If plungers are cut, the engine may run away and be broken by centrifugal force. If plungers are faced off, the ends of governor yoke should be bent further out from face of wheel, thereby allowing plungers to again seat firmly before governor weights are thrown out further than at right angles to face of wheel. If the speed is too high, adjusting screws should be turned back half a turn each, being careful to adjust all the screws the same. Half a turn of these screws should change speed about 100 revolutions per minute. If by turning back governor spring adjusting screw the speed is not reduced, the plungers do not seat, and should be faced off.

Suggestions. Have a few strips of No. 0 sandpaper about 1½ in. wide to clean up the commutator.

If the light fails to burn when turning on steam, see that all screws are tight, and that point of copper electrode is clean. Push down on lever and see if carbon lifts up and falls freely. Put a carbon across both binding posts, and if there is a flash when it is

removed, dynamo is all right and the trouble is in lamp. If there is no flash when carbon is removed take out brushes and clean commutator with sandpaper (not emery paper), put the brushes back and try the carbon again.

Keep all screws tight.

After putting in a new carbon, always push down on lever, and notice if carbon lifts and falls freely. If it does not lift, it is not in the clutch. If it does not fall down freely, turn it partly around and find the freest place.

The carbon should burn from eight to nine hours.

Engineers should be held responsible for the proper care of the equipment unless some one is appointed to examine and care for them at roundhouses.

Before leaving on a trip the equipment should be started and brushes examined, as to tension of springs, and adjusted if necessary before getting out on the road.

These equipments are not automatic, and as there are quite a number of enemies to electricity on the locomotive, such as grease, dirt, jar, heat, etc., it is necessary to give it a few minutes' attention each day.

Don't attempt to remove reflector from the case until the top carbon holder is removed by loosening thumb nut.

If the copper electrode burns off, equipment is running too fast, and the speed should be reduced by turning governor spring screws to the left until the trouble is stopped. Be careful and adjust all screws the same as nearly as possible. One-half turn of screws will change speed about 100 revolutions per minute.

Be sure and adjust tension spring as loose as

possible and not have the light go out while locomotive is standing still.

If light dies down when locomotive is running fast, the tension spring may be too tight, which prevents solenoid from separating carbons sufficiently to form proper arc, or top-clutch spring may be too loose, allowing back edge of clutch to be jarred up and release carbon.

If the light goes out when the locomtive is standing still, the tension spring may be too loose or carbon may not feed freely.

If light burns green on the road, throttle steam at once.

If electrode does not come in line with the carbon, the holder should be bent until electrode comes in line with top carbon.

Both ends of one lead wire should be doubled about one inch so it cannot go into binding post with the small hole, and thereby prevent crossing of wires.

Special motor brushes should be used with the improved brush holders, top and bottom brush being of the same quality. The graphite and carbon brushes used with the old style brush holders should not be used with the improved brush holders nor special motor brushes in the old style holder.

The Edwards Electric Headlight Co., of Chicago, whose factory is at La Porte, Ind., are manufacturing an electric headlight which, in addition to sending a powerful ray along the tracks in front of the engine, also projects a powerful vertical beam. The vertical beam makes a very decided illumination in the heavens, so much so that it is possible not only to detect the presence of an engine, but also in many cases to follow its path and determine in which way

it is heading. An engineer is by this means placed in touch with the movements of other trains in his vicinity and is enabled to detect their presence where, if they carried ordinary horizontal beam headlights, he would

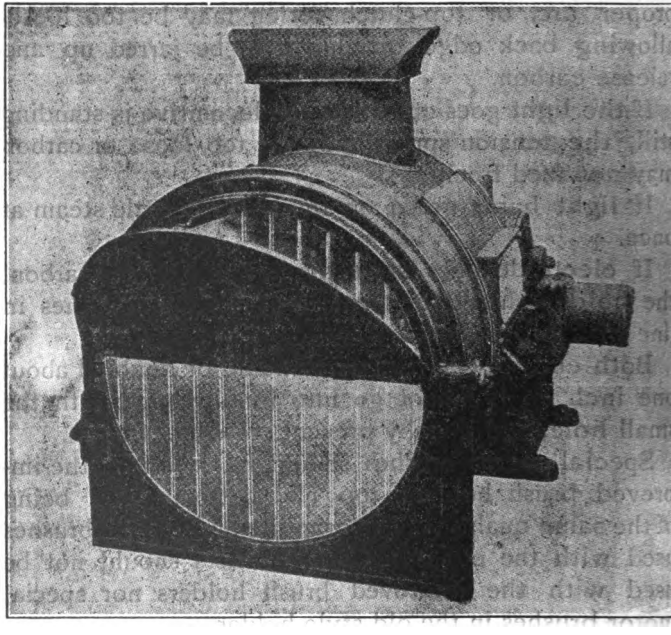

FIGURE 216

FRONT VIEW SHOWING SHADE DRAWN

be unaware of their location. The horizontal ray of light projected in front of the engine, highly illuminates the track and right of way for a distance of half a mile to a mile ahead of the train. Among the objections that have been raised to the use of electric headlights on locomotives is this one, that owing to the

very brilliant light the engineer would not be able to distinguish the different colored signals, but practical experience seems to refute this idea, and the claim made for the Edwards light is that it does not in any wise decrease the efficiency of the signal lights, but on the contrary that they show up in their true colors.

Another valid objection is, that on a double track road there is danger of blinding an approaching en-

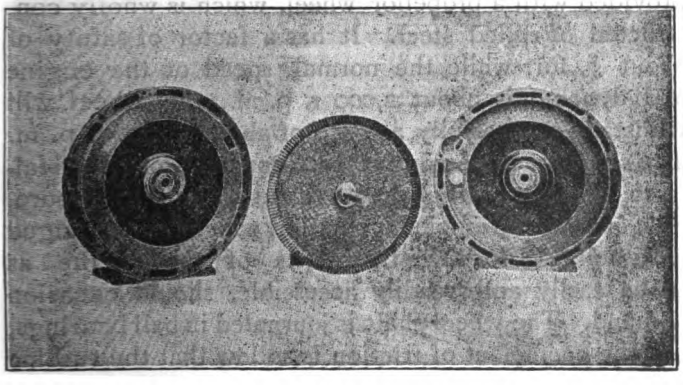

FIGURE 217
THE TURBINE ENGINE DISASSEMBLED

gineer. There is good ground for this latter objection and to guard against this contingency the apparatus is provided with a translucent shade, within the goggle, which may be drawn at will by the engineer when he is at the proper distance from an approaching engine. This shade destroys the strong glare of the light, giving the effect of frosted glass. As soon as the approaching train is passed the engineer releases the shade and again gets the full value of the light.

The Edwards equipment, a front view of which is

given in Fig. 216, consists of four parts: first, the motor, a simple-acting steam turbine; secondly, the dynamo, mounted on the same axle with the turbine and designed to yield to the arc light a current of from 30 to 33 amperes and from 30 to 33 volts; thirdly, the lamp, including the arc, the deflectors and the case; and fourthly, the bed-plate on which the whole apparatus is mounted.

The steam turbine, shown disassembled in Fig. 217, is provided with a propellor wheel, which is wholly constructed of rolled steel. It has a factor of safety of about 7, for, while the normal speed of the engine and dynamo is about 2,000 r. p. m., the wheel will withstand successfully a speed of about 14,000 r. p. m. The speed of the engine is held constant, or practically so, regardless of change of load or initial pressure, by a simple and efficient governor, which is so arranged with relation to the other parts of the engine as to be easily and readily accessible, should occasion demand. The wheel shaft is journaled in ball bearings, and the coefficient of friction is so low that the turbine will operate, running to its full speed, under a pressure so slight that a pointer upon a 180-pound steam gauge will not leave its stop, the gauge being connected between the governor valve and the nozzle. All the moving parts are encased in a cast-iron housing so designed as to thoroughly protect it from the elements dust, dirt, etc. The lubrication is automatic and is provided by loose rings feeding the oil to the ball bearings from the oil wells.

The dynamo is of peculiar construction, designed for the particular purpose for which it is used. The field is differentially wound, and the electric circuits so arranged that a burned-out armature is impossible.

Should a short circuit occur on any point of the circuit, the current is neutralized, and no matter how long the engine may run or the armature rotate, there will be no production of current whatever until the short circuit is removed. As soon as this is done the dynamo performs its proper functions and operates as usual. The current densities throughout the whole machine are very low, so that a minimum heat effect is produced, regardless of extremes of temperature or other conditions which might affect the resistance of the machine. Low-resistance carbon brushes are used, and many months of constant wear show very little deterioration of these brushes. Very large and long journal bearings are provided, and profuse lubrication is secured through the medium of loose rings dipping into the oil wells. An important feature of the equipment is the arc lamp with its parabolic reflector. It is strongly made, and care has been taken to insure a steady and constant light, free from flicker.

The vertical beam is caused to project upwards by an auxiliary plane deflector, placed outside the goggle at an angle of 45 deg. and in such a position as to intercept about 40 per cent of the whole volume of light issuing from the parabolic reflector and direct it vertically. This vertical beam forms a constant warning signal. Reaching to a great height, and on cloudy nights striking the clouds, it can be seen for many miles. In fact, upon the Big Four road it has been seen for a distance of 21 miles, and on the Chicago, Milwaukee and St. Paul road it has been seen for a distance exceeding 16 miles.

The whole apparatus is generally mounted upon one cast-iron bedplate, and it is the work of only six or ten hours to apply the equipment to the locomotive.

FIGURE 218
A SECTIONAL VIEW OF THE EDWARDS ELECTRIC HEADLIGHT

All that is necessary is to secure the bedplate at the proper place on the smoke arch by means of brackets bolted thereon, the running of a three-quarter-inch live steam pipe from the cab, and the passing of a one and one-quarter-inch exhaust pipe into the smoke arch.

Figure 218 gives a sectional view of the equipment. The light is fitted with a carbon positive pole and a copper negative. The focus is maintained by special mechanism, an adjustable guide being furnished for the carbon. This guide bears in three points on the carbon and permits of perfect adjustment regardless of small differences in diameter of the latter. Fig. 219 presents a view of the assembled turbine and generator direct connected. The steam is led to the engine through a ¾-in. copper pipe from the cab and the exhaust is led into the smoke arch by means of a 1¼-in. wrought iron pipe. The steam exhausts almost opposite the admission port of the engine, through the various exhaust ports seen in the cut, Fig. 217.

To Remove the Armature. To remove the armature, first take out the brushes from their holders, back of the set screw on the brush holder yoke; then remove the four nuts and two cap screws. The end plate may then be taken off, after which the armature may be withdrawn. The field coils are held in place by ¼-in. square keys. The coils may be removed by driving out the keys and removing the pole pieces. In reassembling the dynamo, be sure the oil rings are raised to permit the shaft to pass through the bearings, then replace the end plate. The field coils and armature are protected by a circular sheet steel casing fitting into grooves in the end plates. The armature

is mounted in self-adjusting bronze bearings. These bearings are lubricated by means of rings, the shaft having spiral grooves to carry the oil throughout the bearings. Overflow oil holes are drilled in both oil wells to prevent too much oil being placed in the bearings. These overflow holes must be kept open, and the oil wells occasionally cleaned of sediment by removing the plugs, and cleaning the reservoirs

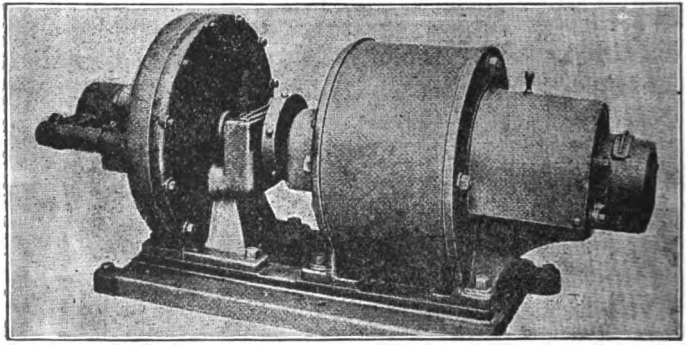

FIGURE 219

THE MINATURE TURBINE AND DYNAMO

with kerosene. Care must be taken to have the oil rings in the slots in the bronze bearings.

To Adjust the Lamp. To adjust the lamp, first have the correct speed on the dynamo, and the commutator and brushes working properly, then set the adjusting screw on the shunt side of the lamp, so that the pawl will clear the escapement wheel about $\frac{1}{100}$ of an inch; then raise the brass tube, or oil cylinder, which carries the carbon by means of the carbon holder support, and permit it to fall, then adjust the limit screw so that when the arc is established it will hold over with-

out breaking the circuit. If the arc breaks when the light is started, or if, while the light is in operation, the equalizer sets up a pumping action, giving a vibrating or flickering light, the limit screw is set too high. On the other hand, if this limit screw is set too low, there will not be sufficient separation, when the light is started, and there will be only a small red light. This also may occur when the light is in operation and the locomotive in motion, which defect may be easily and quickly corrected by slightly raising this limit screw. When the arc is properly established the spring should be adjusted by means of the nuts so that the carbon will feed as it burns away without breaking the arc. If "tack head" deposits form on the top of the negative, and, breaking off, interrupt the light occasionally it is evidence that the spring is too weak, thus not allowing the arc to be drawn out long enough. A slight increase of the spring tension by adjusting the nuts will correct this fault.

It is necessary that the brass tube, or oil cylinder, guide rod, and valve rod should be kept perfectly clean. For this purpose a soft felt cloth should be used, never using sandpaper or emery paper or waste, as the sand and emery will roughen these surfaces, and the lint from the waste may clog the rack.

The Brushes and Brush Holders. The brushes and brush holders must be kept perfectly clean, and the brushes must always slide freely in the holders. The brushes must always occupy the proper position on the commutator, and the screw firmly set. Unless they are kept in this position there will be sparking between the brushes and the commutator, thus reducing the light and burning the commutator. The ends of the brushes which bear upon the commutator

are slightly beveled, and in replacing them in the holders see that their full end surface has complete contact with the surface of the commutator. The brushes are self-lubricating and no oil or other lubricant must ever be put on the commutator.

Use only sufficient spring tension on the brushes to prevent sparking between the brushes and the commutator.

The Commutator. The copper bars of the commutator are separated by mica insulation.

The copper will wear more than the mica and if the mica is allowed to project above the surface of the copper, even slightly, it will prevent perfect contact between the copper bars and brushes, which must, at all times, be maintained. To prevent the mica from thus interfering with perfect contact between the brushes and the copper bars, the mica should always be a little below the surface of the copper bars. This is accomplished by filing out the mica to a depth of about $\frac{1}{64}$ of an inch by the use of a small file. This process will raise a slight burr on the edges of the copper bars which must be removed by using a strip of No 0 sandpaper (never use emery). In this operation run the machine slowly, meantime working the sandpaper back and forth lengthwise of the commutator so as to cover the whole surface, until it is perfectly smooth, then wipe the commutator clean, working a clean cloth or waste lengthwise to clean out the shallow grooves between the copper bars.

Use sandpaper as above described whenever the commutator becomes slightly rough. Should the commutator become too rough, or out of round, the armature should be removed, and the commutator dressed off in a lathe, using a diamond-point tool, and

removing only enough metal to make a perfectly true and clean surface. After turning, polish with sandpaper (never use emery), then file out the mica as above directed.

THE VICTOR LOCOMOTIVE STOKER

The Victor Locomotive Stoker is the successor to the Kincaid Locomotive Stoker, which was invented by Mr. John Kincaid, who was for many years an engineer on the Chesapeake & Ohio R. R.

Necessity is, and always will be, the "mother of invention." Conditions arise which can only be met with approved ideas and approved methods, and the increased traffic, both in the freight and passenger service of all the prominent railways, has necessitated heavy power engines of approved types and enormous size, in order to accomplish desired results. In fact, the engines have grown beyond the capabilities of the firemen, and as the latter could not be reconstructed or endowed with greater strength and endurance, mechanical means became the only logical solution of the problem.

To meet these conditions, and to relieve the firemen of the severe and exhaustive drudgery imposed upon him, the inventor, himself a Brotherhood engineer, and a former wielder of the scoop, designed his now famous stoker. It was not designed to degrade the fireman's position, but to exalt it; not to make his duties within the province of "cheap men," but to put a premium upon his intelligence; to give him greater opportunities to study and thus hasten the time of his promotion to the position of engineer.

The merits of Mr. Kincaid's invention are manifold, but prominent among them are—

Its ability to fire an engine without opening the door, thus relieving the fireman from the extreme heat of the firebox; to scatter the coal in small quantities over the whole grate area, just as the needs of the engine require, thus obtaining almost perfect combustion, the reduction of the smoke and spark nuisance to a minimum and to insure the greatest possible saving in coal. A higher and more uniform steam pressure can thus be obtained; less clinkers are formed; longer runs can be made without cleaning the fires; as the stoker fires without opening the door, the in-rushes of cold air from frequent opening of the fire-door are eliminated, and the fire-box sheets and flues are protected from sudden contractions and expansions; thus the chief source of leaks in the furnace are practically overcome.

In firing with the stoker a much lower grade of coal can be used than is possible in hand firing and still accomplish as good or better results. Nut and slack coal is always preferable when using the stoker.

These stokers have been in operation since January 1st, 1905, attached to locomotives with wide fire-boxes, and to locomotives with long fire-boxes, used on all classes of passenger service. The result of this work has proven beyond all question that the stoker will do its work efficiently and economically and that the fireman, having once become acquainted with the stoker and recognizing its labor-saving features, becomes its enthusiastic supporter.

The continuous feeding of coal has a very marked effect upon the amount consumed. Run-of-mine coal is used, but it has been found that a good grade of

slack will secure even better results owing to the principle of feeding coal in small quantities widely distributed. Absence of dense volumes of black smoke is also very noticeable.

Figure 220 shows the stoker as it appears in the cab, the small controlling engine required to operate it being located on the boiler head on the fireman's side.

The following are the dimensions of the apparatus: Length over all, 47 inches; as three inches of the trough enters the fire door, the stoker extends back on the deck 44 inches; width over all, 24 inches; height on short legs, 28 inches.

Figure 221 shows the stoker as attached to the furnace of a locomotive. A represents the hopper which receives the coal; B the plunger-trough through which coal is propelled into the furnace; C the stoking cylinder; D the rotary valve; E the furnace door; F the controlling engine, and at the left of the furnace door, the steam pipe extending to the locomotive boiler; also the valves and choke-plugs of the stoker, arranged for the convenience of the fireman in regulating the operation of the machine.

The illustration in Fig. 221 shows the controlling engine connected underneath the stoker. Fig. 222 is a transverse view from Fig. 221, and shows the head of the plunger and its position in the trough at the end of each stroke; the conical deflector, attached to the inside of the door, which spreads the coal in the fire-box, and when the stoker is removed, may be turned up to close the hole occupied by trough. The rocking-shaft connected with the controlling engine, which transmits power to the rotary valve, D, and to the conveyors in the hopper; also the end of the trough,

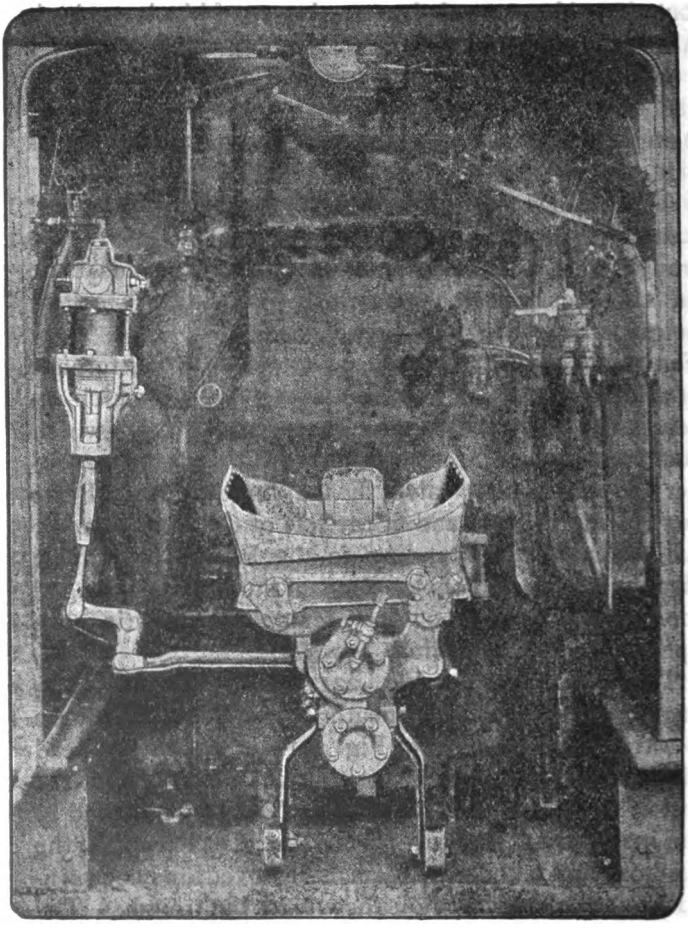

FIGURE 220

in which the plunger travels, and the exhaust steam port are likewise shown in this illustration.

Fig. 223 shows the hopper raised, and reveals one of the twin spiral conveyors which carry the coal forward; it also shows the opening through which the coal drops onto the apron after leaving the conveyors, and, when apron is retracted into the trough, to be thrown into the fire-box by the next forward stroke of the plunger.

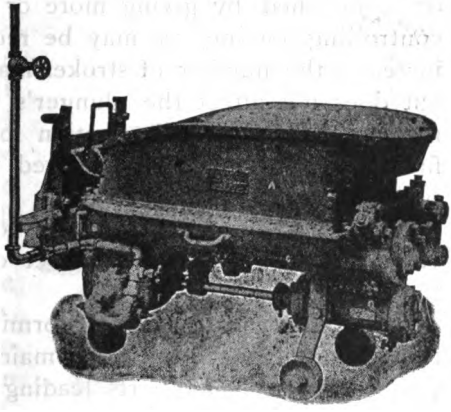

FIGURE 221

Description. The stoker consists of the following essential parts, viz.: First, a main cylinder and a trough in which reciprocates a piston and plunger which with a variable stroke, throws the coal to the different portions of the firebox. This variable stroke is given to the plunger by means of a rotary valve, three separate steam ports leading from said valve to the rear end of the cylinder, and three choke plugs, one for each of the said steam ports.

Second, a small controlling engine. It has been found by experience that the most desirable location for this engine is on the boiler head on the fireman's side. This removes the liability of condensation and consequent dryness of engine parts when placed on and beneath the stoker itself. The steam for the

operation of this engine is taken directly from the dome.

Third, a hopper with two spiral conveyors journaled in the bottom of the hopper pan. The conveyors carry the coal to the front of the hopper, onto the apron of the plunger, giving a regular and uniform feed. The speed of the conveyors may be increased or diminished by giving more or less steam to the controlling engine, as may be required. This also increases the number of strokes made by the plunger, but does not affect the plunger's velocity, or in any manner affect the distribution of the coal in the firebox, the latter being governed by the three choke plugs.

Fourth, a small steam chest containing a rotary valve which regulates the number of strokes made by the plunger.

That portion of the stoker forming this valve chest is cast in one piece with the main cylinder and has three separate steam ports leading to the rear end of the cylinder for the admission of steam behind the plunger or piston. These steam ports terminate in one common port before entering the rear end of the cylinder, first through a small preliminary port at the end of the cylinder (which also acts in the form of compression by retarding exhaust on the last portion of the return stroke), and after the piston has advanced a short distance it uncovers the main port, which also leads from the common port, giving free passage to the steam.

A choke plug is placed in each of the three steam ports between the valve-sleeve and the common port. The office of the three choke plugs is to vary the amount of steam reaching the rear end of the cylinder

through the various ports and thereby giving a variable stroke to the plunger.

The valve operates in a rotary manner, each of the ports stopping fully open in front of its corresponding steam passage in regular succession: Beginning with No. 3, (the port nearest the rear of the stoker) the steam, after leaving this valve, passes through port No. 3 into the common port and the rear end of the cylinder. Choking down this steam port until it is almost closed causes a very light stroke of the plunger, distributing the coal over the grate near the fire-door. The other two valves operate in the same manner, each taking its respective turn. They are adjusted so that more steam is admitted on the second stroke than on the third, thus distributing coal over the middle portion of the grate, and more on the first than on the second, thereby scattering coal over the front end of the grate. By this adjustment of the choke plugs any range of distribution can be obtained that may be desired.

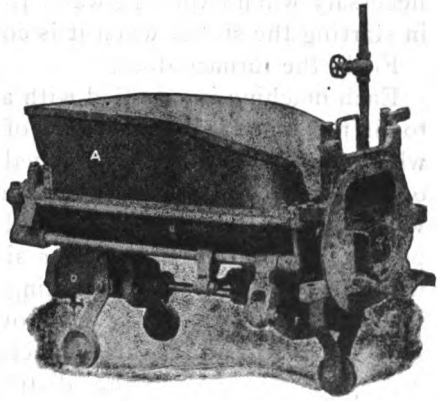

FIGURE 222

The rotary valve and cylinder are provided with suitable live steam and exhaust ports for the return of the plunger and the exhaust steam from each end of the cylinder. In the front end of the main cylin-

der is a very small live steam port, connected directly with the live steam supply, and its office is to return the plunger after its forward stroke and also to add volume to the steam retained after the piston has passed over the forward exhaust port; thus giving the desired compression to prevent the piston ramming the front cylinder head. By means of a valve this port can be enlarged to give increased compression necessary when expelling water from condensed steam in starting the stoker when it is cold

Fifth, the furnace door.

Each machine is supplied with a furnace door made to fit the standard door-frame of the locomotive to which the stoker is to be attached. This door has an opening to receive the stoker trough and is provided with suitable brackets for holding the machine in position. Cast upon its inner side are curved lugs, which serve the purpose of hinges for a deflector for spreading each charge of coal over the width of the firebox. The end of this deflector can be raised, if necessary, to aid in the distribution of coal, by means of a set-screw directly under its center. It also has a small vertical sliding door for inspecting the fire, and the deflector can be turned up vertically and held in place by a latch to close the trough opening when the stoker is removed.

To Operate the Stoker. *Directions for Firemen.*— Don't fail to be on your engine *at least* 30 minutes before leaving time.

Know for yourself, before starting, that you have the necessary tools with which to do your work. If they are not on the engine, report the matter to the round house foreman, and don't go out without them.

A fireman's outfit should consist of, 2 scoops; 2 hooks

(one 12 feet and one 7 feet); 2 torches; one coal pick, and one ash-pan scraper.

Before leaving the round house, examine the shaker rigging and know before starting that it is O. K. Also see that the ash-pans are clean.

To build the fire break every particle of bank. Be careful not to get green coal on the grates. Spread the fire evenly over the entire grate area, then attach the stoker.

Assist the engineer all you can in getting the engine ready, but *never* neglect *your* work to do his. Always manage to keep the oil cans and torches filled and ready for immediate use.

Be sure the steam is turned on next to boiler. If you have a reducing valve set the gauge at about 60 or 80 pounds; if not, about one half turn on the globe valve next to the boiler is sufficient. Before admitting steam to stoker *always* open the *admission valve* to front end of cylinder to prevent the piston from ramming the front head. Leave this valve open, until the condensation is thoroughly blown out, and machine heated up to steam temperature. Then close and *leave it closed.*

Regulate the speed of the stoking piston by the throttle valve to the *controlling engine.* Run the machine slowly at first until enough steam is held in the cylinder on which to cushion the motion of the piston.

Starting the Stoker. *Turn on the steam gently, allowing sufficient time for condensation to blow out.* (Turning on a full head of steam before condensation is exhausted will burst this cylinder the same as it would on any other engine.) This may require a little time, as the steam ports are small. If there are any drain cocks on the stoker, see that they are open before

turning on the steam. If there are none, considerable water will appear at the mouth of the stoker trough when starting the machine. This comes from the exhaust, and is caused by the steam coming in contact with the cold metal of the machine, but will disappear in a few minutes, or as soon as the circulation of steam has warmed up the cylinders. Should the piston head hit the back cylinder head on the return stroke open choke plug No. 3 to let in enough steam to cushion. If water appears at the exhaust after the machine has been in operation for some time, it indicates too much water in the boiler. As soon as steam has been turned on at the boiler, open the globe valve in the steam pipe leading to the small engine. This is the throttle valve for the small engine, and the amount of steam admitted by it regulates the speed of the conveyors and the number of strokes made by the plunger. To run the machine fast or slow increases or diminishes the amount of coal fed into the furnace, but does not affect the distribution of the coal in the firebox. Should controlling engine be lazy about starting touch one of the tappet rods at either end of the floating valve.

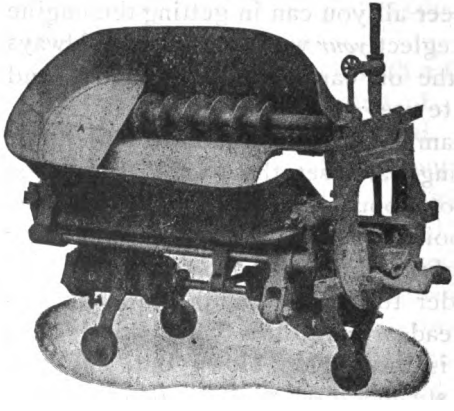

FIGURE 223

To Regulate the Choke Plugs. To regulate the choke plugs for the distribution of coal in the firebox, wait until the steam has reached the maximum pressure and machine is working; then with all the choke plugs wide open, turn on enough steam at the throttle valve to throw the coal near to, but not strike the flue sheet; then close down the middle choke plug (No. 2) until this charge falls near the center of the firebox; then close down the choke plug No. 3, next to the back end of the stoker, until the coal drops inside the furnace door. This gives a distribution over the entire length of the firebox. Don't fill the hopper with coal when regulating the choke plugs or you will get too much coal in the firebox, and waste fuel. Use only one or two scoopsful at a time and watch the distribution in the firebox.

In regulating the choke plugs when the engines are standing, be careful not to make the strokes too heavy, as the draft will assist in carrying the coal forward when the engine is working. Never try to regulate choke plugs with the front end admission valve open. If the steam drops 20 or 50 pounds while the stoker is in operation, open the throttle valve accordingly, unless some form of steam regulator is used. If, after running some time you find the stoker piston only making half strokes, examine front end admission valve and you will find it was not entirely closed or accidentally opened. Close this as far as you can and remedy the trouble.

Operating the Stoker. In operating the stoker on large engines with a heavy train, usually 20 to 30 strokes of the plunger per minute is sufficient, providing the hopper is kept full. The speed of the stoker can be varied from 12 to 40 or more strokes per

minute. The speed of the stoker should be regulated to correspond with the work the engine is doing. Before starting out on a run, see that the entire surface of the grates is covered with fire. A heavy fire is not necessary, as better results can be obtained with a thin, bright fire. Avoid heavy firing. Remember the stoker is at work continually and there is little danger of the fire getting away, but don't neglect it when the engineer shuts off steam. Remember your fire is lighter than when firing by hand, and will die out quicker. *Notice the condition of the fire often.* This can be done by means of the small vertical sliding door above the stoker trough. If you can't see take your long hook and feel your fire occasionally. If the fire should become banked near the door, open up the choke plug No. 3 until this charge of coal goes beyond the bank; if the fire becomes banked near the flue sheet, close down the choke plug No. 1 slightly. If the fire is too light near the door or flue sheet, the reverse action should be taken; if the fire is too heavy in the center of the firebox, notice the choke plug No. 2, and if this is firing in the right place either open up the choke plug No. 1 or close down choke plug No. 3 slightly, or both, as this may happen by having the third stroke too heavy and the first too light. As a general rule, when the choke plugs have once been regulated, it is seldom necessary to change them. However, it is better to change the plugs than to hook the fire. If a bank is found anywhere in the fire, it can generally be burnt out without using the hook, by changing the choke plugs. With engines having a severe draft, considerable coal may be carried in by the draft before the plunger strikes it. This with some engines, is distributed over the back

part of the grate, and with some engines it is distributed near the center. In either case the choke plugs should be regulated to suit these conditions. The coal should be broken as fine as possible, as much better results can be obtained. Railroads having the stoker in use should furnish nut and slack. It is much cheaper and the stoker will do better work with it.

In taking stoker apart be very careful not to lose nuts, bolts or other small parts, the loss of which might disable the machine.

Always keep the packing around the main piston rod tight. If this gets loose the steam used for cushioning the forward stroke escapes, causing the piston to strike front head.

Drifting Down Grades. While drifting down a long grade it is only necessary to feed enough coal into the firebox to keep up the heat and not let fire get too low. It has been suggested to build up a pretty good fire in the firebox before starting down grade and then to use the blower occasionally and feed in coal only just what is needed. Before reaching the bottom of the grade, if it is a long one, it would be well to start the stoker so as to have a good fire and a good supply of steam when the engine begins to use the steam again.

Care of Stoking Head. Always stop the stoker before hooking the fire as the hook might be caught by advance stroke of piston, and the stoking head or piston rod be broken. If at any time the stoking head should get a trifle loose, take off the nuts which hold it on and insert a sheet iron washer behind them to keep it tight. *Notice this every day.*

Shaking the Grates. The fireman should shake the

grates often but not too much at a time. Avoid getting green coal on the grates.

Dampers. Watch the dampers closely. On starting out it is occasionally best to keep the front one closed and the back one open, but over the last part of the run, or in any case where the fire is dirty and the draft obstructed, it may be better to open the front damper and close the back one. The regulation of dampers must be left almost entirely to the judgment of the fireman as the varying conditions require different adjustments of the dampers.

Black Smoke. The emission of black smoke indicates that the engine is being fired too heavily. It also indicates that coal is being wasted, and as the purpose of the stoker is to save, not to waste coal, these signs should always be recognized as an evidence of improper adjustment.

When the stoker is doing the duty it is capable of performing, the proper quantities of oxygen are admitted to the firebox to create nearly perfect combustion, which depends upon two parts of oxygen to one part of the combustible elements found in the coal and of course, a uniformly high temperature in the firebox Therefore, black smoke may be taken as a safe guide in determining a waste of coal, resulting from too heavy firing, and the stoker should be regulated accordingly.

Tools. With each stoker is furnished a $\frac{5}{8}$ by $\frac{5}{8}$ wrench, which will fit nearly all the small nuts and cap screws on the machine. The $9\frac{1}{2}$-in. air pump spanner wrench, which is found on every locomotive, will unscrew the caps on the floating and reverse valve chests and will loosen the stuffing box on main cylinder, controlling engine and the rotary valve. The *thumbscrew* which holds the stuffing box on main

cylinder from getting loose, is used to turn and draw out the reversing valve stem in the controlling engine. All the studs on stoker are $\frac{5}{8}$ x $2\frac{1}{2}$; all nuts are $\frac{5}{8}$ semi-finished; all cap screws are $\frac{5}{8}$ x $1\frac{3}{4}$.

All firemen should see that they are supplied with one 7 foot and one 12-foot hook, 2 scoops, 2 torches, 1 coal pick and 1 ash-pan scraper.

Coal. While the stoker will handle about as large lumps of coal as can be fired by the shovel, yet all railroads forbid the firing of coal in large lumps as it is not only to the advantage of the railroad but also of the fireman, for large lumps of coal start clinkers and in the end cause more trouble to the fireman than it would be to break up the lumps. With the stoker it is particularly desirable that all lumps be broken up to a size not larger than a man's fist.

DON'T FORGET TO FILL LUBRICATOR BEFORE STARTING

Oil. One of the most important duties of a fireman in operating a stoker is to see *that the lubricator is feeding oil, about three to five drops per minute all the time* stoker is in use, but shut off lubricator when standing on the side track. No steam engine will run long without oil, and the stoker is no exception to the rule. Therefore we desire to impress upon firemen the fact that a lack of oil in the stoker and on all its wearing parts will not only disable or damage the stoker, but will also brand the fireman in charge of the stoker as a careless man and not fit to handle a stoker or an engine.

Care of Stoker at Terminals. As different customs prevail on different railroads, it is probable that the

same directions for handling the stoker at terminals cannot always be followed.

Our observation, however, has led us to believe that it is better for the fireman to detach the stoker at terminals and roll it back against the coal gate, leaving it in such a position that it cannot be damaged by dumping coal into the tender, or be in the way of the men cleaning or repairing the engine.

The fireman should instruct hostlers to have a good supply of steam by the time he has reached his engine, say 100 pounds pressure or more, and he should make it a point at all times to be at his engine in plenty of time to have everything ready before time for starting. When the fireman reaches his engine he should examine the stoker carefully to see that it is all right. Blow a little steam through the pipe before connecting the stoker, and see that there is no coal or cinders in the stoker end of the disconnected pipe. Some railroad men have suggested that the hostler should disconnect and connect the stoker at terminals. As hostlers, and particularly their helpers, would not be expected to be familiar with the stoker, we would discourage this idea as we believe it would be a source of trouble on account of misusage. Besides this, it does not take five minutes for the fireman to detach the stoker when coming into a terminal, and he can always have it unfastened and placed back out of the way before the engine reaches the stopping place, and but a few minutes to attach stoker when ready to start out; but the fireman should insist upon the hostler or his assistants having a good fire ready for him when he reaches his engine before starting out. Always try shaker bars to see if they are properly connected and in good working condition.

Accidents. Should an accident occur to the stoker while on the road, and you are sure that it cannot be readily repaired, cut off the steam from the stoker, loosen the connections, and if there is no room on the engine deck, run the stoker back out of the way; turn up the deflector to cover the hole in the door occupied by the trough and fasten it, firing the engine by hand until such a time as the permanent door can be put on. By removing journal caps on right-hand conveyor, the hopper can be removed and placed on back of tank. Should the engine be a small one, having no room to get the stoker out of the way, let it remain in position and fire through the small door until a stopping place is reached where it can be examined. Do not attempt to put on the regular door belonging to the engine until a station has been reached or until the conditions are such that it can be done without losing your fire. Then consider the matter very carefully as to what is best to be done.

If the stoker can be repaired in the shops of the road, have the repairs made as soon as the shops are reached, and if the repairs are of such a character that they must be made by the manufacturers of the stoker wire the shops at the first stopping place to have the necessary parts ordered. In dispatches or letters always give full information, leaving nothing to be guessed at. A few cents more expense by adding a few words more to a message should not be considered if there is the least possibility of a misunderstanding as to your meaning In a letter, if there is any doubt of misunderstanding or misinterpretation as to what is wanted, make a sketch of the part or parts required.

In repairing the stoker, should any nuts or bolts become rusted or unremovable, soak them thoroughly

in kerosene, which will, in most cases, loosen them in a short time. Be very careful not to lose any bolts, nuts, keys or other small parts, the loss of which might disable the machine.

When out on the road, make note of any parts that may become broken or out of order as soon as discovered, and upon reaching the terminal look carefully over the stoker and see if any other repairs are needed. Make it a point to have the machine in perfect condition so that it will be ready to start out on the next trip. *This is imperative*, and must be attended to before leaving the roundhouse.

Do not lose tools and extra parts committed to your care, as such losses can only be attributed to carelessness.

BREWER PNEUMATIC FIRE DOOR OPENER

The occupation of locomotive firemen is one requiring a great deal of exercise, especially if the engine is on a long freight run, and consuming 15 to 20 tons of coal on a run. Some expert has calculated that for each ton of coal that is shoveled into the firebox with a No. 4 scoop (holding on an average 17 lbs. of coal), the fireman is required to make 585 distinct movements as for instance with each scoop full there are five movements divided up as follows:

1. Filling the shovel with coal.
2. Opening the door.
3. Picking up the shovel.
4. Throwing the coal into the firebox.
5. Closing the door.

Therefore the burning of ten tons of coal requires 5850 distinct movements on the part of the fireman,

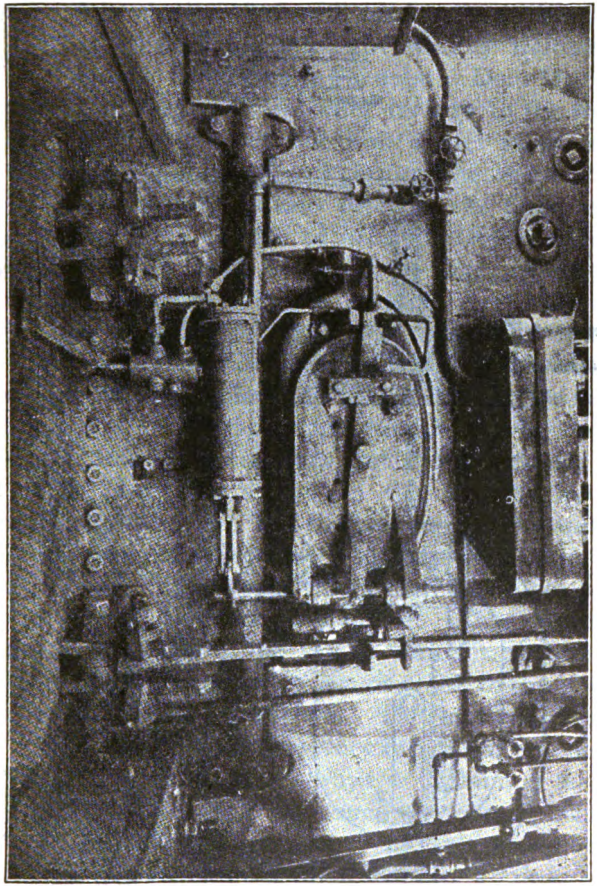

BREWER PNEUMATIC DOOR OPENER, FULL VIEW

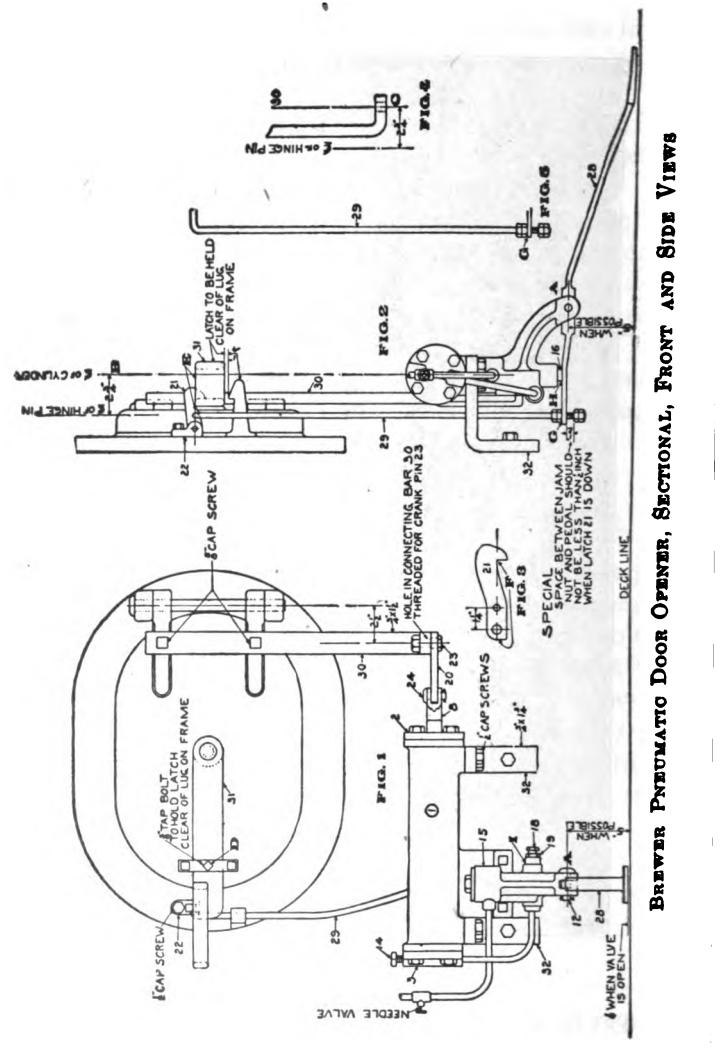
FIG. 1
FIG. 2
FIG. 3
FIG. 4
FIG. 5
CAP SCREW
CAP SCREWS
TAP BOLT TO HOLD LATCH CLEAR OF LUG ON FRAME
HOLE IN CONNECTING BAR 30 THREADED FOR CRANK PIN 23
SPECIAL SPACE BETWEEN JAM NUT AND PEDAL SHOULD NOT BE LESS THAN ¼ INCH WHEN LATCH IS DOWN
NEEDLE VALVE
WHEN VALVE IS OPEN
DECK LINE
LATCH TO BE HELD CLEAR OF LUG ON FRAME
POSSIBLE WHEN
CENTER OF HINGE PIN
CENTER OF CYLINDER

BREWER PNEUMATIC DOOR OPENER, SECTIONAL, FRONT AND SIDE VIEWS

and twenty tons would necessitate 11,700 movements in order to place it where it would do the "most good." Any device that will tend to save some of this hard labor, should certainly be warmly welcomed by the fireman. The Brewer Pneumatic Door Opener appears to be deservedly working its way to the front as not only a labor saver, but also a fuel saver, and by its action in opening and closing the firedoor almost instantaneously, it also protects the flues, as it prevents the large volume of cold air from entering the firebox with each shovelful of coal, which is unavoidable with the old style method of opening the door. The sudden cooling of the back ends of the flues is thus to a large extent prevented, while at the same time the single shovel system of firing is insured.

The apparatus is simple and durable, having very few parts, and therefore does not easily get out of order. It is clearly shown in the accompanying illustrations, which are self-explanatory. The quantity of air required to operate it is very small, almost imperceptible. It consists of a small horizontal air cylinder directly underneath the door. This cylinder is fitted with a piston, the rod of which is connected by means of a link and short arm or crank to the pivot upon which the door swings. The motion of the door in opening or closing is very rapid, but the door does not slam, as there is always a cushion of air to prevent this. The door is opened by simply placing the foot upon the treadle or trip shown on the deck. This action opens the air valve, admitting air to the cylinder, thus forcing the piston to move towards the right. To close the door, remove the foot from the trip, allowing the air behind the piston to escape. This permits the door to swing shut. This device is

being used quite extensively on the Chicago, Rock Island and Pacific, and other roads.

QUESTIONS

467. Upon what does the efficiency of a boiler depend in a large measure?

468. Theoretically what would be the correct way to supply a boiler with water?

469. Are these conditions practical?

470. What is the duty of engine men regarding the injector?

471. Is this an important subject?

472. When is a good time to use the injector?

473. How may the latent heat stored in the water be utilized?

474. Mention another "right" time and place to use the injector.

475. Should an injector have a wide range of capacities?

476. What can be said of the leadingty pes of modern injectors?

477. Who invented the injector?

478. How can an injector lift and force water into under pressure?

479. What two important qualities does steam possess that enables it to do this?

480. When steam comes in contact with a body in front of it what is the tendency?

481. What is momentum?

482. What is the velocity in feet per second of a jet of steam discharging at 180-lb. pressure?

483. What is the function of the combining tube of an injector?

484. What are some of the requirements of this tube as to construction?

485. Why does the combined jet enter the boiler?

486. What is the velocity of this jet in the delivery tube?

487. What velocity does the jet need to enter the boiler carrying 180 lbs. pressure?

488. To what then is the action of the injector due?

489. What can be said of the Sellers' Improved Self-acting Injector?

490. What is its range as to pressures?

491. How is the size of an injector determined?

492. What is the capacity per hour of a number 9½ Sellers' at 200 lbs. pressure?

493. What are some of the things to be done in caring for an injector?

494. What about the Sellers' Self-acting Injector Class "P."

495. What should be the quality of the steam used in an injector?

496. Suppose that an injector suddenly stops working, what are some of the probable causes?

497. And what are the remedies?

498. What sometimes happens to the lifting tube?

499. Suppose the main check valve does not seat. What is to be done?

500. If there is an air leak in the suction pipe, what is the result?

501. What do lime and salts in the water do for an injector?

502. If the inlet valve does not feel cool what is the matter?

503. What type of injector is the Metropolitan?

504. What function does the lifting set of tubes perform?

505. How low a steam pressure will the Metropolitan start with?

506. How high a pressure will it work up to?

507. Is there any waste at the overflow?

508. Is it easily regulated?

509. What is the capacity per hour of a No. 9 Metropolitan?

510. How is the capacity of this injector regulated?

511. What are some of the causes of this injector not working properly?

512. What are line check valves?

513. What can be said of the "88" Monitor injector?

514. How should it be located with reference to the water level in the tender?

515. What kind of combining tube has Rue's Little Giant Injector?

516. How may it be used as a heater?

517. What type of injector is the "simplex"?

518. What is its throttling capacity?

519. How is it used as a heater?

520. What is the range in pressures for starting the Lunkenheimer Injector?

521. What is the capacity per hour of a No. 15 Lunkenheimer at 200 lbs. pressure?

522. Of what does the Hancock Inspirator consist?

523. How high will it lift water?

524. Of what does the lifting apparatus consist?

525. How is the combining tube of the inspirator made?

526. What is the range of working pressures of the Hancock Inspirator?

527. At what pressure is its maximum capacity?

528. At how high temperature will it take feed water?

529. How is it regulated?

530. What is the function of the intermediate overflow valve?

531. What is the capacity per hour of a No. 9 Hancock Inspirator?

532. How should the inspirator be located in order to obtain the best results?

533. What is a frequent source of annoyance in the use of the inspirator?

534. Mention other causes for the instrument not working.

535. What is a "composite" inspirator?

536. Mention some of the characteristics of the Hancock "Composite."

537. What qualities should a safety pop valve possess?

538. Describe the action of the Crosby Pop Valve.

539. How may the point of opening in the Crosby be changed?

540. What kind of a seat has this valve?

541. How is the American Pop Valve adjusted for blowing off pressure?

542. How is the American Pop Valve adjusted for blowdown?

543. What are some of the characteristics of the Crane Pop Valve?

544. What is a peculiar feature of the Kunkle Pop Valve Spring?

545. Mention another characteristic of this valve.

546. How often should a lubricator be blown out?

547. What is to be done with a lubricator when it becomes air bound?

548. Do the tubes and nozzles of a lubricator require frequent cleaning?

549. Does scale and sediment from the boiler settle in the lubricator?

550. If the oil pipes become clogged how may they be cleansed?

OIL BURNING LOCOMOTIVES.

Up to 1901 the use of oil as fuel for locomotives in the United States was quite limited; but the recent discovery of the great petroleum fields of Texas and Southern California has so increased the visible supply that oil is now much more widely used in this country than it formerly was. Oil versus coal as fuel is in fact one of the live, practical railroad problems of the day. All roads have considered this problem in a more or less systematic way, and not a few have to a greater or less extent equipped their lines with oil-burning locomotives, oil supply tanks, and other requisite mechanical appliances for the use of oil as fuel. The up-to-date railroad man, therefore, must know all about the oil-burning locomotive—how it differs from the coal burner, how it is fired, how operated, etc.

Petroleum, or "rock oil" as it was at first called, was discovered in commercial quantities in the United States about 1859. Very soon afterwards, experiments were begun, to find some practicable way of using the new product as fuel for locomotives. The first devices were very crude. For example, in two locomotives built for the Eastern Railway of France, the oil was simply allowed to run freely in grooves on the top of the grate bars, which sloped toward the front of the firebox, and the air supply came up between the bars in just the same way as when coal is used.

The first really successful oil-burner was made in Russia. It was invented by Thomas Urquhart, Locomotive

Superintendent of the Grazi-Tsaritzin Railway, about 1883. This device was one of the first to use a jet of steam to spray or atomize the oil as it enters the firebox, and this same principle has been adopted in all the most successful burners that have since appeared.

Russia is the greatest oil-burning nation today. The use of oil as locomotive fuel has in that country become more general than in any other. This is due in the first place, to the abundant supply of fuel oil there available, but more especially to the peculiar qualities of the Russian oil, which make it particularly adapted for heating purposes. With the largest portion of American petroleum, 75 per cent is capable of being made into refined oil, leaving only 25 per cent of residues. In Russia, on the other hand, these figures are exactly reversed: only 25 per cent is made into refined oil, while 75 per cent is residues. And the residues are what is burned.

ADVANTAGES OF FUEL OIL.

The relative advantages of oil and coal as fuel, depend, of course, on the question of their relative cost in use. In estimating this cost, various things besides the price of the fuel have to be taken into consideration—such as the savings effected in repairs to engine and roadbed; in labor, cleanliness, and comfort; in lessened liabilities to damage suits from setting fires, etc.

One pound of oil will generate approximately as much heat as one and three-fourths pounds of coal; but when all economies are taken into consideration, it is estimated that

1 lb. oil = 2 lbs. coal.

From experiments made by the Baldwin Locomotive Works, the following formula has been deduced, by the use of which can be calculated the price one would have to pay for oil to make it the equivalent of coal at any given price:

$$\frac{\text{Cost of coal per ton} + \text{Cost of handling (say 50c.)} \times 10.7 \times 7}{2{,}000 \times \text{Evaporative power of coal}} =$$

Price per gallon at which oil will be the equivalent of coal.

In using above formula, the cost of both coal and oil is considered *at the place delivered to the engine,* and not at the place where purchased by the railroad. By "evaporative power of coal" is meant the number of pounds of water evaporated by the boiler for each pound of coal burned; this varies considerably with the ratio of heating surface to grate surface, and with the volume consumed in a given time; and may range from 5 to 12 pounds.

Example:—If coal can be delivered to tender at $3.00 a ton, and oil would cost 1½ cents a gallon, or 63 cents a barrel of 42 gallons, which is the cheaper fuel? *Answer:*—Oil.

Using above formula:

Cost of coal $3.00
Cost of handling .50

3.50 × 10.7 = $37.450
10.7
2450
3500

37.450 × 7 = $262.150
7

262.150

The ordinary run of California crude oil will show in the calorimeter from 19,000 to 20,000 British Thermal Units, and an average evaporation of from 13 to 14 pounds of water per pound of oil, from and at 212° F.—an efficiency of about 80 per cent. The best coal obtainable will not run more than 13,000 to 14,000 B. T. U., with an evaporation of from 10 to 12 pounds of water per pound of fuel. Oil-firing can therefore get out of a boiler almost 25 per cent more power than coal-firing.

What the future holds in store for oil as a fuel, is not yet settled as regards the Eastern lines—those in the region of dear oil and cheap coal; but certainly, on the Western lines, oil-burning has now passed the experimental stage, and nothing short of exhaustion of the supply could turn its success into failure. The equipment of the Southern Pacific includes over 900 oil-burning locomotives. The Santa Fé has 315 on its Coast lines, and about 200 on its Texas lines. The Salt Lake Line has 75; and all the smaller lines in California are using oil as fuel exclusively. The total number of oil-burning locomotives in the United States in 1916 was estimated at 2,500.

The following are claimed as advantages of oil over coal as fuel:

(1) *Less waste of fuel.* With ordinarily constructed locomotives, working pretty hard and using a violent exhaust, it is estimated that from 15 to 25 per cent of the coal escapes combustion, but with oil the combustion is practically complete.

(2) *Economy in handling fuel.* Oil can be run into tank on tender from standpipe, same as water, and supplied to firebox by turning a valve always within fireman's reach.

(3) *Economy in handling ashes.* With oil, there are no ashes to handle.

(4) *Economy in handling engines at terminals.* Estimated as at least 50 per cent less than the cost of handling coal-burners.

(5) *Diminished repairs to locomotives,* especially firebox repairs. It is only fair to note that in the case of oil-burning locomotives the firebox and flues are subjected to very severe punishment, and it is exceptional when

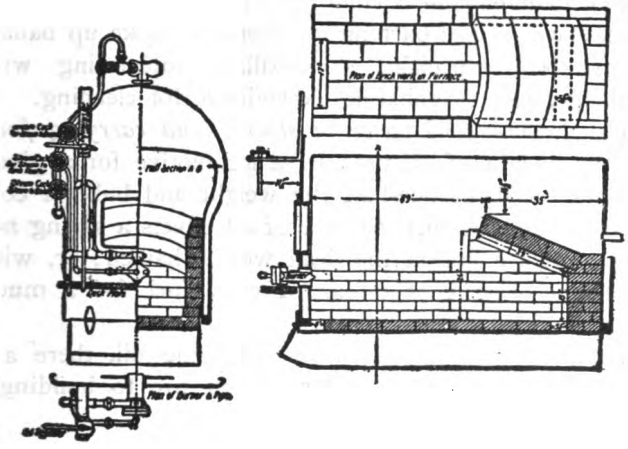

Figure 223a. Details of Oil-Burning Furnace.

an engine will run two years without renewing firebox, or longer than twelve months with a set of flues. It is almost useless to attempt to patch side-sheets, for the heat is so intense that the extra thickness of metal prevents the heat from being taken up by the water, and the patch is soon burned. The side sheets in an oil-burner crack most frequently immediately back of the arch, evi-

dently because of the heat being most intense at that part of the firebox.

(6) *Economy in cleaning engines,* due to absence of smoke and cinders around engine.

(7) *Less waste of steam at safety valve.* It is estimated that in ordinary locomotive practice the waste of steam at the safety valve (which is equivalent to a waste of fuel) is about 5 per cent; but on an oil-burning locomotive, with proper care on the part of the fireman, there need be no waste of steam at all at the valve.

(8) *Economy in cleaning ballast.* Cinders thrown from stack in coal-burning locomotives, choke up ballast in roadbed, especially stone-ballast, interfering with drainage, and necessitating expenditure for cleaning.

(9) *Economy of space in storing and carrying fuel.* As the weight of oil used by a locomotive for a given distance is about one-half the weight and bulk of coal for the same distance, the use of oil effects a saving not only in space but in the dead weight hauled; or, with the same weight of oil as of coal, fuel for a much longer run is carried.

(10) *No fires from sparks.* In using oil, there are no burning sparks or cinders to set fire to buildings, bridges, or other property along the track.

(11) *Greater cleanliness and comfort for passengers,* owing to absence of smoke and cinders—a point appreciated by the traveling public, and tending to increase traffic.

(12) *Possibility of utilizing more of the heat.* Boiler flues must be large enough to avoid becoming choked up with cinders. In coal-burning locomotives, they range from 1¾ to 2 inches in diameter. If oil is used the flues may be made much smaller, and also be increased in number, thus increasing the extent of heating surface.

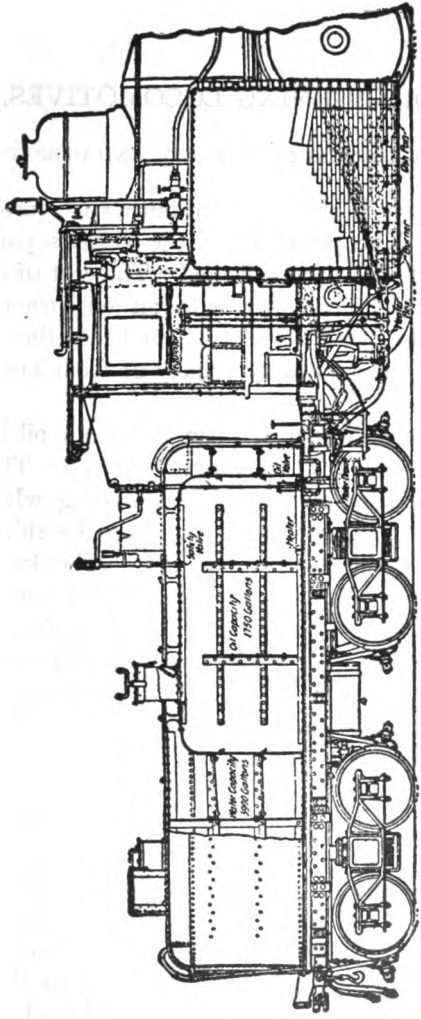

Figure 223b. General Arrangement of Oil-Burning Locomotive—Santa Fe.

OIL-BURNING LOCOMOTIVES.

HOW CONSTRUCTED, FIRED, AND OPERATED.

In Fig. 223b is shown a coal-burner converted into an oil-burner. The positions of the various parts of the oil-burning fittings are indicated. The cost of converting a coal-burning locomotive into an oil-burner averages from $500 to $700, the chief item being the tender oil-tank, which has a capacity usually of from 2,000 to 3,500 gallons.

When a coal-burner is changed to an oil-burner the grates and grate frame are first removed. The ash pan is then remodeled by putting in a casting which fits the inside of the pan, which is riveted on the sides near the top. This serves as a support for the brickwork of the sides of the firebox because it is cored out enough to admit just enough air for the proper combustion of the oil in the firebox. The brick arch is usually built as low as possible, the chief purpose being to protect the crown sheet, crown bolts and seams from overheating. The oil burner is secured to the bottom of the mud ring exactly central and is placed at an angle so the jet or spray of oil will strike just below or under the arch. Details of the arrangements of piping and brickwork of an oil-burning locomotive are shown in Figs. 223a and 223e.

Ordinary commercial fire brick is used for side walls and inverted arch. Experience proves that fire bricks which soften under heat are preferable as they form a bond which adds strength to the wall and prevents it

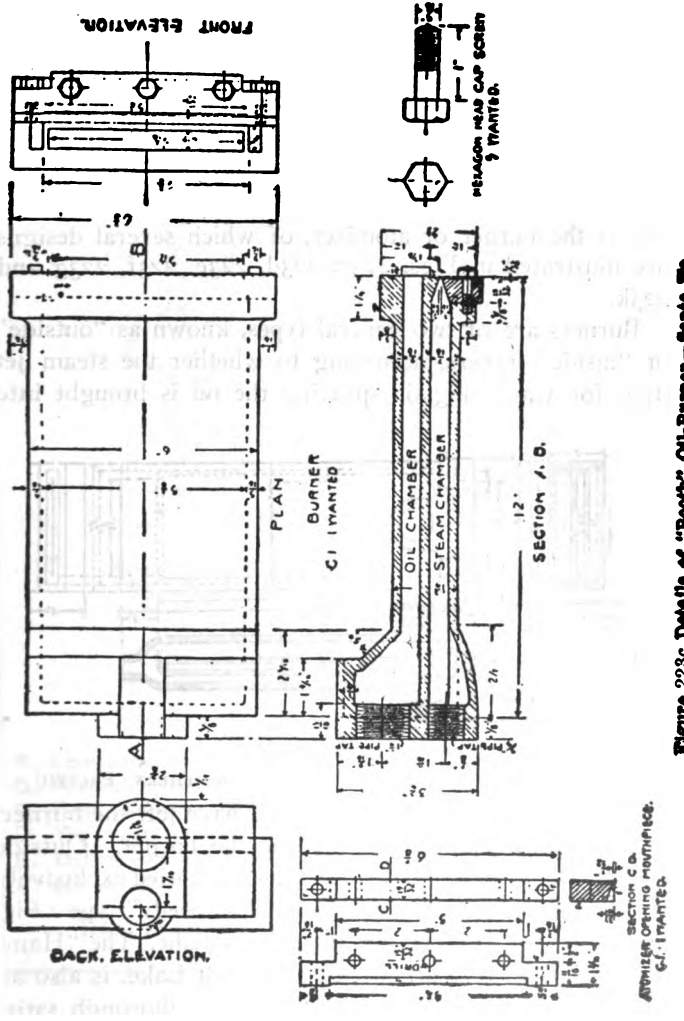

Figure 223c. Details of "Booth" Oil-Burner—Santa Fe.

shattering under shocks. Fire bricks having very high heat-resisting qualities and claimed to crack when cooling are claimed to be of little use.

THE BURNER OR ATOMIZER.

One of the principal devices of an oil burning locomotive is the burner or atomizer, of which several designs are illustrated in Figs. 223c, 223d, 223e, 223f, 223g and 223k.

Burners are of two general types, known as "outside" or "inside" mixers, according to whether the steam jet used for vaporizing or spraying the oil is brought into

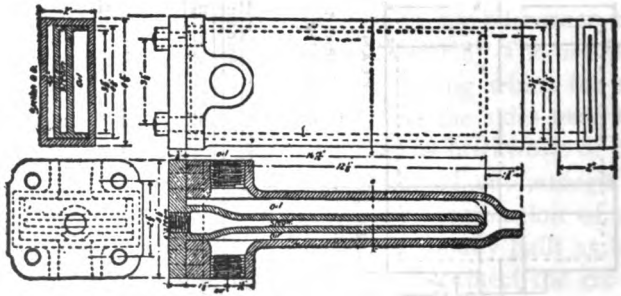

FIGURE 223d

DETAILS OF "SHEEDY" OIL-BURNER—SOUTHERN PACIFIC

contact with it in the air after both have left the burner, or whether this takes place inside the burner. Outside burners of the Booth type (Fig. 223c) are used exclusively on the Santa Fé; and inside burners, "Sheedy" type (Fig. 223d), are standard on the Southern Pacific. The "Hammel" type (Fig. 223e), used on the Salt Lake, is also an inside burner. Both types seem to give thorough satisfaction, so that the question which design to use does not seem to be of vital importance.

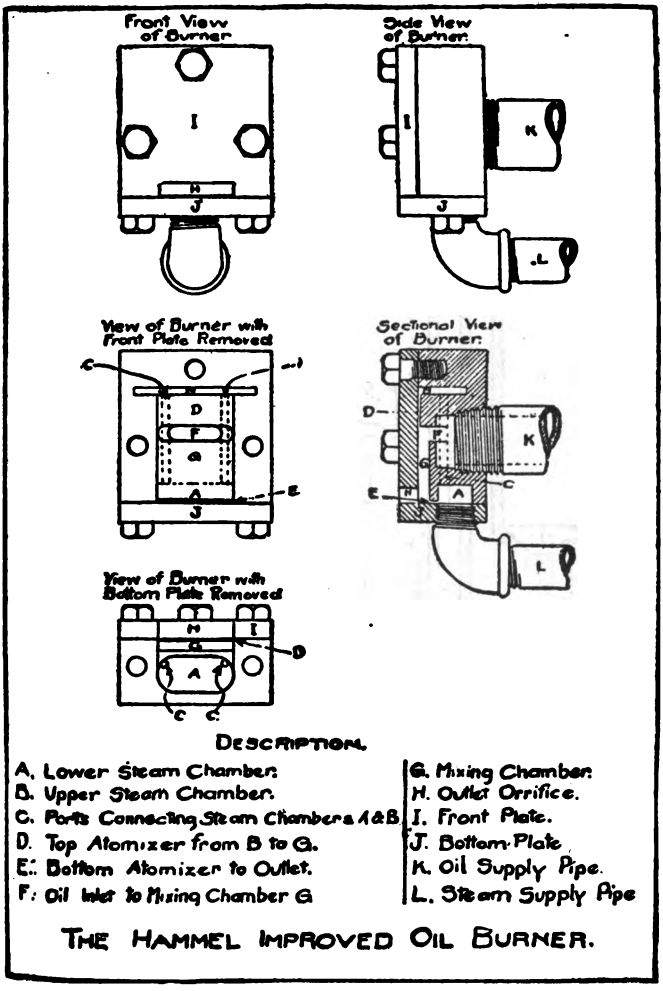
Front View of Burner
Side View of Burner
View of Burner with Front Plate Removed
Sectional View of Burner
View of Burner with Bottom Plate Removed
DESCRIPTION.
A. Lower Steam Chamber.
B. Upper Steam Chamber.
C. Ports Connecting Steam Chambers A & B.
D. Top Atomizer from B to G.
E. Bottom Atomizer to Outlet.
F. Oil Inlet to Mixing Chamber G.
G. Mixing Chamber.
H. Outlet Orrifice.
I. Front Plate.
J. Bottom Plate.
K. Oil Supply Pipe.
L. Steam Supply Pipe.
THE HAMMEL IMPROVED OIL BURNER.

FIGURE 223e
"HAMMEL" OIL-BURNER—SALT LAKE

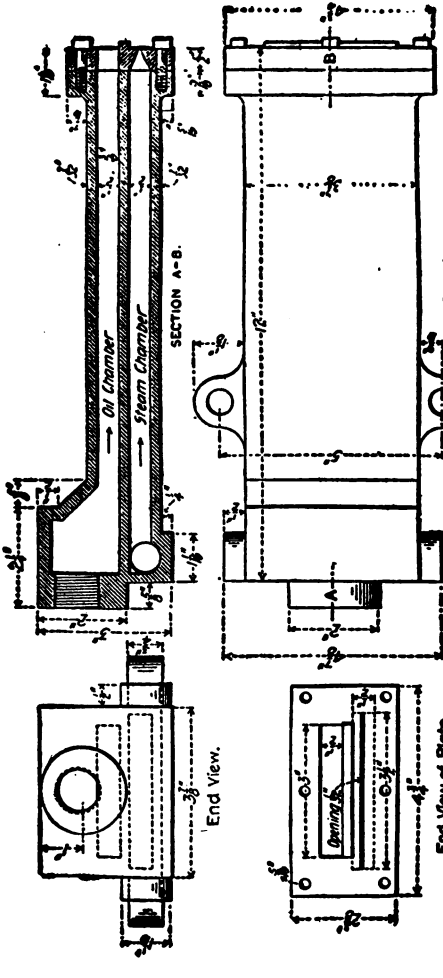

Figure 223f. Details of "Booth-Wade" Oil-Burner. First Type Used in United States.

The purpose of the atomizer is to break up the oil into a fine spray. It is made of brass. In the Santa Fé burner (Fig. 223c), steam enters bottom at one end and comes out through a slit at other end. The oil flows through the upper part of the burner over the hot partition and on issuing is caught by the steam and sprayed into the fire, which, when the engine is working, is a mass of flame

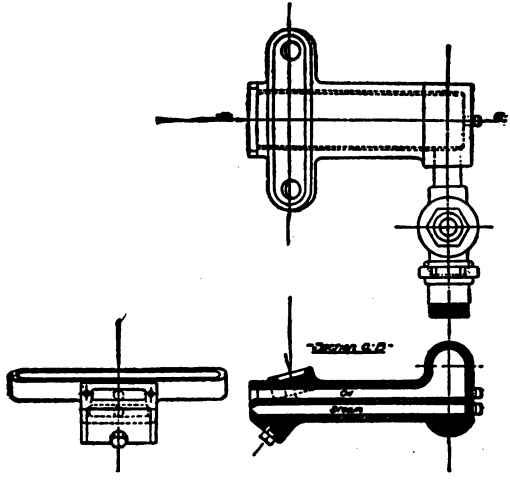

Figure 233g. Baldwin Oil-Burner.

filling the firebox. The supply of steam and oil to the burner is regulated by the fireman from the cab, the handles of the steam and oil supply valves being located so that he can readily manipulate them from his seat.

The Santa Fé burner is rigidly attached to the mud ring; it is a casting having an oblong passage. One end of the casting is enlarged to receive connection with oil and steam pipes one above the other. The mouth of the

steam passage is directly underneath the mouth of the oil passage and the effect of the steam pressure is to spray the oil as it flows from the upper passage.

In the Southern Pacific burner (Fig. 223d), there are three passages: one for oil, one for steam, one for air. Oil enters rear of burner from above, air is conveyed from below through a narrower passage to a common mouth just behind which terminates a central tube supplying steam. The mixture of oil, air and steam is there sprayed into the firebox through one nozzle. In the Southern Pacific arrangement the burner is located near the upper part of the bricked portion of the firebox, probably for the reason that the form of nozzle causes the spray to be thrown down as well as up.

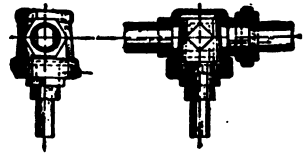

Figure 223h. Baldwin Feed-Cock.

The opening in the plug, being square, retains its angular form and permits of very fine feed adjustment.

The type of burner used by the Baldwin Locomotive Works is rectangular in cross-section, with two separated channels (one above the other) running its entire length (Fig. 223g. Oil from the reservoir is admitted through a pipe into the upper channel, its flow being controlled by a plug cock in the feed pipe, operated by a handle within easy reach of the fireman in the cab. Steam is admitted to the lower port of the burner through a pipe connected to the boiler in such a manner as at all times to insure the introduction of dry steam. The valve con-

trolling the admission of steam is also conveniently located in the cab close to the fireman's seat. A free outlet is allowed for the oil at the nose of the burner; the steam outlet, however, is contracted at this point by an adjustable plate which partially closes the port, and gives a thin, wide aperture for the exit of the steam. This arrangement tends to wire-draw the steam and increase its velocity at the point of contact with the oil, giving, it is claimed, a better atomizing effect. The plate after being once adjusted, need not be moved except for cleaning purposes. The oil, as it passes through the burner, is heated to a certain extent by the effect of the steam in the lower portion, and flows freely in a thin layer over the orifice. It is here caught by the jet of steam issuing from the lower port, and is completely broken up and atomized at the point of igniting. The oil is carried into the firebox in the form of vapor, where it is mingled with a sufficient quantity of oxygen from the incoming air to insure as near as possible perfect combustion.

The usual arrangement has been to place the burner at the *back* end of the firebox, using a brick arch; but latterly a design has appeared in which the same burner is used, but placed at the *front* end of the firebox. This does away with the need of the brick arch and thus effects a great saving of expense. For the maintenance of the arch is one of the heaviest of all expenses incurred in oil-burning. An arch costs originally about $25, and the life is in some cases as short as two to three weeks, and rarely exceeds three months. In Figs. 223a and 223 l the burner is shown placed at *back* of firebox. Fig. 223j shows an arrangement adopted on some Santa Fé locomotives, with burner at *front* end of firebox, dispensing with the brickwork arch.

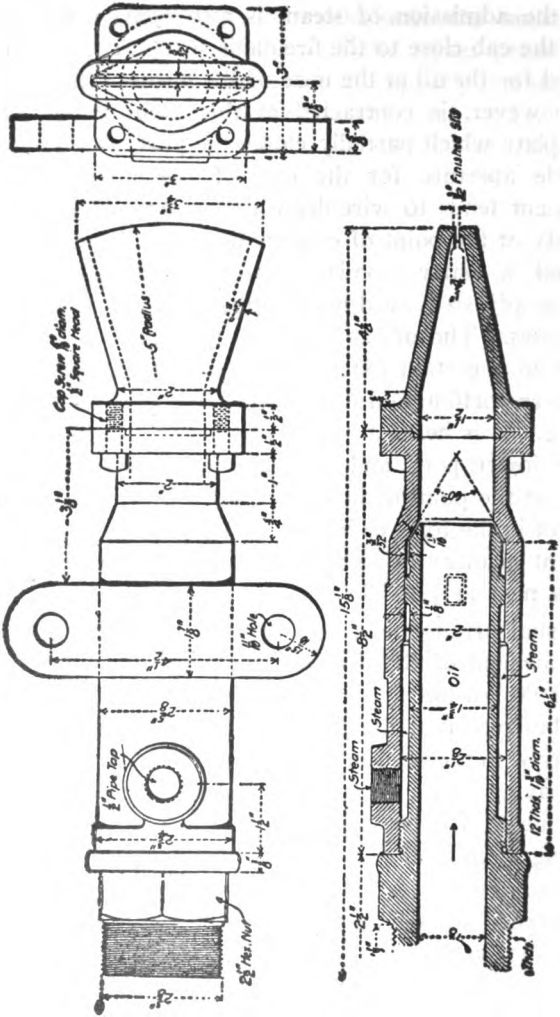

Figure 2231. Details of "Lundholm" Oil-Burner.

Figure 2233. Oil-Burner at Front End of Firebox—Santa Fe

With the Lassoe-Lovekin burner (Fig. 223k), a special type recently developed and tested on the Santa Fé Coast Lines—all brickwork is done away with, except a covering for the bottom of the ashpan. The oil is taken from the tank by means of a pump and delivered to the burner under a pressure of 120 pounds, being sprayed into firebox from back end.

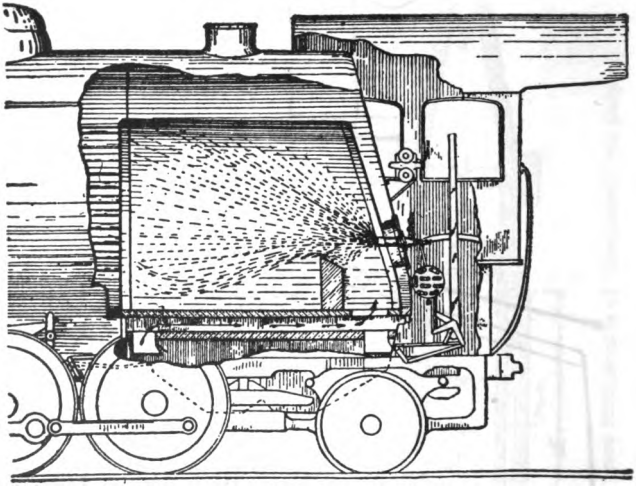

Figure 223k. Lassoe-Lovekin Oil-Burner. Dispenses with Brick Arch. Oil Supplied Under Pressure.

The general arrangement of the firebox as adopted by the Baldwin Locomotive Works, is illustrated in Fig. 223 l, The burner is placed below the mud ring at the back and on a line with the center of the boiler, and is pointed upward at a slight angle. A firebrick arch at front of firebox protects tubes and gives direction to heated gases, insuring their mingling with the incoming air. The

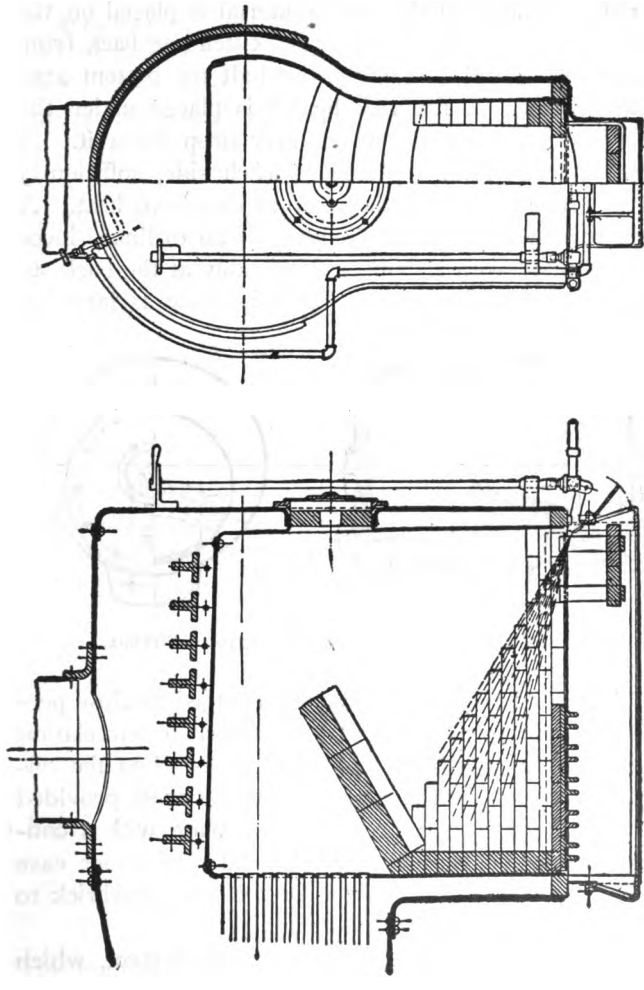

Figure 223 l. Burner and Firebox Arrangement on Baldwin Locomotive.

throat sheet below the arch is protected with a wall of firebrick. A layer of the same material is placed on the grate-bars (or equivalent supports), extending back from the front wall, and covering about half the bottom area of the furnace. A firebrick hearth is placed under the burner to catch any oil which may drop from it. A course of brick is also placed on each side, sufficiently high to protect the side sheets from excessive heat. A device corresponding to the ashpan of an ordinary locomotive is fitted with a damper, preferably at the back, to govern the admission of air. This is made as large as

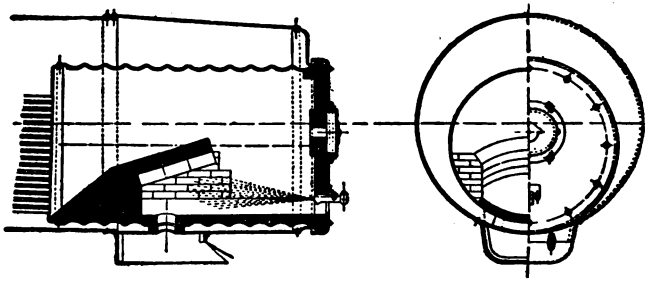

Figure 223m. Oil-Burner in Vanderbilt Type of Firebox.

possible, with heavy frame, and is arranged to close perfectly air-tight so as to avoid loss of heat by circulation of cold air through the firebox and tubes when the oil-supply is cut off. The firedoor may be retained, provided its joints are perfectly air-tight; or a plate with a convenient sight-hole may be used instead. In either case the inner surface of the door is protected by firebrick to avoid liability of warping the metal.

In boilers with the Vanderbilt type of firebox, which is circular in cross-section, being rolled in the form of a large corrugated tube, the arrangement of the firebrick is

as shown in Fig. 223m. In general principles it resembles the arrangement just described above, but differs somewhat in details because of structural differences in the boiler. The burner is introduced through the lined casing forming the back head of the boiler, and is located a short distance above the bottom of the firebox. The corrugated sheet forming the firebox is protected at the bottom and a portion of the sides, by a lining of firebrick. The front wall and arch are placed at a suitable distance back of the tube sheet, to allow an unobstructed entrance to all the tubes by the heated gases, forming also a combustion chamber at the front of the furnace.

THE HEATER BOX.

To provide against the effect of cold weather or heavy oil or when it is lacking in fluidity, a heater box is placed between the burner and oil tank to raise the oil to as high a temperature as possible before it goes into the burner.

CAB APPLIANCES.

Details of the three-way-cock blower pipe connection to smoke arch and the oil throttle-valve-handle are shown in Figs. 223a, 223b and 223 l.

CLEANING FLUES—SAND FUNNEL.

The gum and soot generated in the combustion of the oil from the boiler flues should be removed from time to time. For this a funnel is used which is inserted in

the fire-door through which sand is blown by steam with force, through the flues carrying with it the accretions of soot. This funnel is shown in detail in Fig. 223 o.

The oil reservoirs or tanks are made to apply to coal burner tank, one of which is made V-shaped to fit in coal space, in height to be made flush with top of tank. The other, or large tank, rectangular in shape, is made to fit on top of water tank, making perfect joint by connecting with small or V-shaped tank above mentioned.

These two, or pair of tanks, have a capacity of eight tons fuel oil. They are firmly anchored to water tank and tank frame. There is but one manhole for oil, and that is located on top of rectangular-shaped tank immediately over the joint or opening in small tank in coal space.

Each tank is fitted with automatic safety valve, with small chain or rope connection to the back of engine cab, with spring key which passes through upright rod of safety valve; in case of break-in-two between engine and tender this rope or chain pulls spring key out of rod, when safety valve will close automatically and stop feed or flow of oil from tank. An additional automatic or safety valve, also connected to engine by chain, is located in outlet oil pipe between tank and burner, which in case of break-in-two is automatically closed.

Heater pipes are placed in oil tank to reduce oil to proper consistency in cold weather.

There are a great variety of oil burners; with some it is necessary to have a separate heater box, others are made with heater box and burner combined.

In localities where heavy oil is used it is necessary to carry about five pounds pressure in oil tanks.

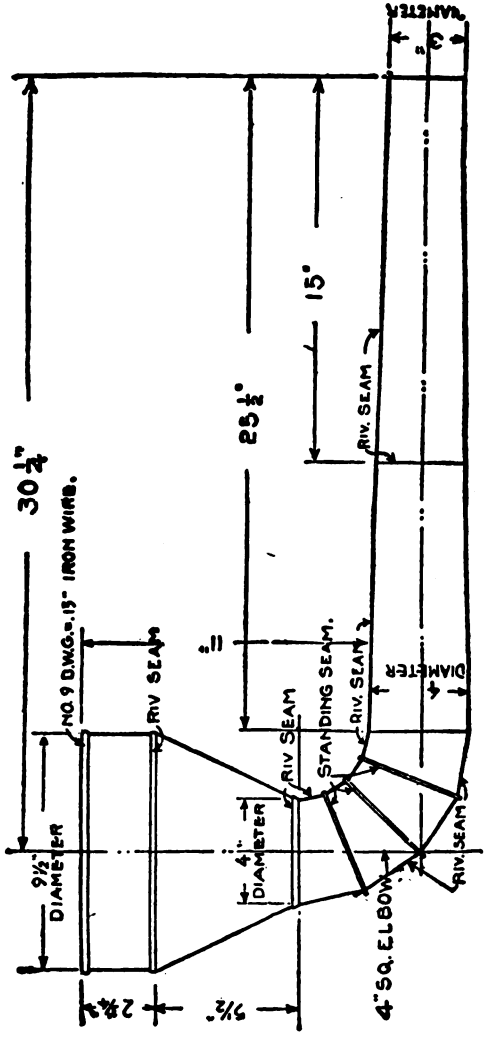

Figure 223 o. Sand Funnel Used in Cleaning Flues—Santa Fe

GENERAL RULES FOR FIRING AND OPERATING AN "OIL-BURNER."

In firing up an oil burner locomotive in the round house, steam connection is made to the three way cocks on the smoke arch which acts as a blower and atomizer at the same time; then throw in the fire box, in front of the burner, a piece of greasy lighted waste; then start the oil to running slightly; then open the atomizer valve enough to atomize the oil which is flowing from the burner, and the oil will instantly ignite. The fire should be watched until steam begins to generate in the engine, when the round house steam can be cut off. Care should be taken not to turn on too much oil, for the explosion would drive the flame out of the fire box and might be the cause of injury to the operator. Care must also be taken to see that the fire does not go out when first started in a cold engine; if it does and is not noticed the oil will run into the pit and may take fire later on and explode and thus damage the engine. The fire must therefore be carefully watched until its burning is well assured after which there is little danger of this happening. Fire going out on an oil burning engine can be detected readily by observing the smoke coming out of the stack. If it is of a white, milky color, it indicates that the fire has gone out and that the oil is still running out into the pan; this smoke is caused by the heat of the brick in the bottom of the pan. That the fire has gone out can also be detected by the odor.

In firing up an oil burning locomotive where steam is

not available, wood may be used until ten or fifteen pounds of steam is generated in the boiler. The wood must be placed in the firebox with great care so as not to damage the brick work, and in using wood for this purpose care must be taken to avoid causing fires along the right of way or elsewhere.

It is very important that the proper amount of steam be admitted to the burner as an atomizer. It is also very important that the brick walls and arch of the locomotive be kept in perfect condition. Occasionally small pieces of brick will fall down and lodge in front of the burner, which will interfere with the engine steaming. All engines should be equipped with a pair of light tongs or a hook so that the fireman can remove these pieces of brick if necessary.

In oil burning engines it is necessary to occasionally use sand for cleaning the gum off the end of flues in the fire box. This sand is applied through an elbow-shaped funnel made for the purpose; the nozzle of the funnel is inserted through an aperture in the firedoor, and when sand is being applied by the fireman the engineer drops the lever in the corner notch and has his throttle wide open. This is very effective, and is only used three or four times in going over a long hard division.

In handling the oil burner on the road the engineers and firemen must work in harmony, i. e., when an engineer wishes to shut off the throttle he should notify the fireman in time so that the latter can close the oil valve in order to prevent waste of oil, the emission of black smoke and the "popping off" of the engine; and again, in starting up, the engineer should notify the fireman so that the oil valve may be opened before the

throttle, and the fire burning before any cold air is drawn into the firebox by the exhaust. In opening the valve the flow of oil should be gradually increased as the engineer increases the working of the engine. If this rule is carried out it will in a great measure prevent leaky flues, crown and stay bolts. Fireboxes can be easily damaged by over-firing.

In a coal burner if an engine drops back five or ten pounds pressure it takes some little time to regain it; in an oil burner the fire can be crowded so as to bring it up almost instantly and thereby overheat the plates and cause damage to the firebox. The practice should be to consume about as much time in bringing up steam on an oil burner as would be taken with a coal burner; too much care cannot be exercised in this particular. It is possible to melt the rivets off the inside of an oil burner firebox by over-firing.

In drifting down long grades, it is preferable to keep the fire burning a little rather than to shut it off entirely to prevent chilling of the firebox, adjusting the dampers to suit a light fire. The water can be carried in such a way approaching such points as will admit of working the injector occasionally to prevent popping off.

The use of the blower should be restricted all possible. It tends to make the firebox leak. If the blower is used at all it should be used very lightly, simply enough to cause a draught.

Some troubles have been encountered on account of waste getting into the oil tank; these are caused by carelessness on the part of Hostlers and Helpers in measuring the oil and wiping the measuring stick off with waste. Waste should therefore not be used for this purpose.

CHAPTER X

WHAT TO DO IN CASE OF BREAKDOWNS

The locomotive engineer, in addition to being competent to "run" his engine successfully over the route, according to the rules of the time card, keeping the water level in the boiler at the proper height, keeping the running gear of the engine properly lubricated, watching out for all signals, sources of danger, etc., should also be a man full of resources and determination; resourceful, in order that he may be able to deal successfully with any one of the many breakdowns that are liable to occur, and determined that when the breakdown does occur, he will if possible bring his engine in alive.

A careful engineer will always inspect his engine before starting out, and in this way be able very often to prevent a serious breakdown. By making regular inspections a man will become so familiar with his engine, and especially with those parts that are the more liable to become disabled, that he can tell at a glance if there is anything wrong. Before leaving the roundhouse he should test all the rod keys, by trying to drive each one back with a copper hammer. In this manner any loose set screws will be at once detected. Out on the road he will be able to detect any derangement of the valve gear, such as a slipped eccentric, loose strap bolt or blade bolts, broken valve yoke or loose valve stem key by the sound of the exhaust.

Although it is the fireman's duty to see that the engine is properly supplied with fuel, water, and the necessary fire tools, lamps, signal oil, and sand, yet it is well for the engineer to see that all of these have been provided. There should be a pinch bar and a pair of jacks, an axe, and a hand saw for use in blocking.

In fact, an engineer should know before starting on a trip that every thing about his engine is O.K. Then if a breakdown does occur out on the road he will have the satisfaction of knowing that he did his best to prevent it.

Derangement of Valve Gear. If an engine suddenly begins to go "lame," it indicates that one of four things has happened. Either a dry valve, a slipped eccentric, a loose strap bolt, or an eccentric blade is loose and has slipped. If, after stopping and looking her over, it is found that none of the three last mentioned things is the cause, and the engine is again started, and the exhaust sounds square, it shows that one of the valves was dry, and that when she was shut off, the oil remaining in the oil pipe was drawn into the valve chest by the vacuum. Sometimes the exhaust will in time wear a hole in the petticoat pipe, and this will cause the exhaust to sound "lame," or the tumbling shaft may be sprung, which will cause a longer cut-off on one side than on the other. In this case there will be two heavy blasts on one side, and two light ones on the other side.

Slipped Eccentric. Place one side of the engine on the center, as near as possible; either center will do. Put the reverse lever in extreme forward motion, and then, with a lead pencil or the point of a knife blade, make a mark on the valve stem at the gland. Now

nave the fireman put the lever in extreme backward motion, and if neither one of the eccentrics on that side has slipped, the mark will come back to very near the same position it was in when the lever was in forward motion. If it does not come within a quarter of an inch of its first position, the trouble is on that side, and if the original marks are on the eccentric and driver axle, the eccentric may be easily reset, but if there are no marks, the mark made on the valve stem at the gland will serve as a temporary guide in resetting the slipped eccentric.

There are several ways of getting very close to the center. Move the engine till the center of main axle, main crank pin and cross-head pin are on the same exact line on that side; or till the centers of axles and centers of crank pins are on the same horizontal line; or till a straight edge on top and bottom of the main rod strap comes the same distance each side of the center of the main axle. Or, go to the other side of engine, place her on the quarter, measure from the center of the main axle to the center of back crank pin, and from the center of back axle to center of main crank pin, move the engine if necessary till the distances are the same; the engine will be on the quarter on that side and the center on the other.

Broken Eccentric, Eccentric Strap or Blade, Broken Valve Rod, Broken Rocker Arm, Broken Link or Pin. Take off both eccentric straps and rods on that side, fasten the top end of the link by tying it to the link hanger and tumbling shaft arm so that it cannot tumble over and interfere with reversing the engine. Place valve to cover steam ports, clamp the valve stem so it cannot move, disconnect the main rod and block the cross-head. With a heavy engine, a better way is to

take off the eccentric straps; tie the top of the link to the top end of link hanger; block the valve in such a position that it will admit a very little steam to the back steam port to lubricate the cylinder; have the lubricator feeding to that side. Take out the cylinder cocks or block them open on that side and any relief valves there may be in the forward cylinder head, leave the main rod up and proceed. If the engine gets caught on the center, close the cylinder cock opening in the back end of cylinder; steam leaking by the valve will soon move her off the center; then open this cylinder cock and go ahead.

Broken Reach Rod, or Arm of Tumbling Shaft. Put a very short block in the link on top of link block and a long one in the bottom end of link so that side will work full stroke. Do not block both links, only one. When the engine is moving, with both link hangers in position as they should be with a broken reach rod, at one point of the stroke one link tends to slip up on its block while the other link is slipping down. If both links are blocked solid top and bottom, the tumbling shaft must bend or spring. To reverse the engine, put the long block in top of link.

Broken Valve Seat. When a seat is broken the engine usually blows through on that side, how badly depends on what is broken and whether the valve is also broken. If the bridge or partition between the steam port to one end of the cylinder and the exhaust port is broken, when the valve uncovers that steam port live steam can get to the exhaust the full size of the broken place. If it is a false valve seat it may be broken so badly that steam will blow through in any position of the valve. When a valve seat breaks it usually catches the edge of the valve and springs the

valve rod, the rocker arm or the eccentric blade, in which case an inspection of the engine should show the damaged parts that are outside the steam chest. If the valve catches so the engine cannot be reversed, it is an easy matter to locate the trouble by holding a hand on the valve rod while the lever is moved; if that side catches, it is soon felt.

After locating the trouble, take up steam chest cover and block over the openings to keep steam from passing through. A board covering both steam ports and the exhaust port will do this; in the case of a false seat taking out all the pieces, if they could not be fitted steam-tight. Usually the valve will have to be left out and a block fitted in between the board and steam chest cover to hold the board from rising up when engine is shut off and drifting. In the case of a balanced valve, the top of the valve comes so close to the pressure plate that the valve will not go in again with a board under it, nor can the broken false seat be taken out and the balanced slide valve be dropped on the cylinder casting, unless the top of valve is also blocked to keep steam out of the exhaust cavity of the valve. Some false seats are fastened to the cylinder casting by tap bolts going into the lands and bridges between the ports, in which case the broken seat cannot be taken out, but must be covered so that steam cannot get by it. After locating the trouble, disconnect the engine on that side, taking down the main rod and blocking the crosshead. It is usually necessary to take off both eccentric straps and rods, as the bottom rocker arm may be bent out so the link will be cramped on the block. If, after disconnecting, the reverse lever cannot move both links easily, uncouple the link hanger on the disabled side from the tumbling shaft arm.

Broken Valve Yoke. A valve yoke usually breaks off at the neck of the valve stem. It can be readily discovered in the exhaust by a tremendous blow. If the valve is pushed far enough ahead it will blow; if not, it is often mistaken for a slipped eccentric (examine the eccentrics first). It may be discovered in this way: Place the crank-pin on top or bottom quarter and reverse the engine; if the steam still continues to come out of the back cylinder cock it is usually the yoke. A great diversity of opinion exists regarding the best remedy for this kind of a break. The old and safest way is to raise the chest cover and block the valve central, replace the cover, remove the valve rod and main rod and block the cross-head at the back end. But this remedy requires much time and labor, and time is a very important consideration on the road, and there appear to be no mechanical objections to the other methods, providing the cross-head is securely fastened. Disconnect the valve rod and push the valve clear ahead, remove the stem if it would blow out, and use a gasket back of the gland, or hold the valve stem intact with valve stem clamp. Block the cross-head at the front end, and proceed; the pressure will hold the valve forward and if it should move it can do no harm, providing the cross-head is securely blocked. Another way is to remove the release valve, push the valve clear back, fit a block into the release valve long enough to hold the valve back, then block cross-head at back end. Still another way is to push the valve stem forward and clamp it by cocking the gland, then block cross-head at the front end. If the yoke is only broken at one side of the valve it will only affect one exhaust. When the yoke pushes the valve forward the exhaust will sound all

right, but when it pulls the valve back the engine will be lame.

Broken Cross-Head. A slight break, such as a gib or plate, may sometimes be clamped, but be careful that the clamp does not strike the guide block at extreme travel of the cross-head. If it is a bad break disconnect the broken side. If the piston is not broken push it against the forward cylinder head and then block the cross-head in that position. If the cross-head is broken so that the cross-head cannot be blocked, the safest way is to remove the piston. If it cannot be taken out set the valve so as to admit steam to the back end of cylinder only, and clamp valve stem securely in this position.

Broken Main Rod or Strap. Disconnect on the broken side.

Broken Side Rod or Strap. Remove the broken rod and the parallel rod directly opposite to it. If it is a ten-wheeled engine and this cannot be done, remove all the side rods. If a front or back rod or strap on a twelve-wheeled engine, remove the broken rod and the one directly opposite to it, if this can be done, and leave the others up.

Broken Cylinder Heads. *Back Head.* Disconnect the engine on broken side. If it is necessary to remove the guides and broken head, then remove the piston also.

Forward Head. Disconnect that side of the engine. Another method advocated by many, but practiced by few, by which three-fourths of the power of the engine could be retained, is to remove the steam chest cover and plug up the forward steam port with wood and proceed working both sides. This method is impracticable, owing to the shape of the steam port cavity on

most engines, and the time it would require, as time is usually the most important factor, besides the improbability of the block remaining intact.

Broken Guides, Blocks or Bolts. If any of the bolts break, try and replace them. See that all nuts are tight, or they may be the cause of springing the piston rod. If a guide bar is broken badly, disconnect one side.

Broken Guide Yoke. If a yoke is bent or broken and will not hold the guides secure, disconnect one side.

Disconnecting One Side. This necessarily implies that the engine is to continue its trip. Remove the main rod on one side and place the liners and brasses back in the straps. Secure the cross-head near the back end of the guides with a cross-head clamp, or with hard wooden blocks, securing the blocks with a rope so they cannot work out. Don't move the cross-head clear back to the striking point, as the cylinder packing rings may get down into the port or counterbore. Remove the valve rod and secure the valve stem with a valve stem clamp, set the valve central upon its seat and cramp the valve stem by tightening the gland on one side. Most engines that use metallic packing are supplied with a valve-stem clamp made to hold the valve central upon its seat; but the valve can easily be set to cover the ports by opening the cylinder cocks and giving the engine a little steam. Then adjust the valve stem until steam is entirely shut off from both cylinder cocks. Do not remove the eccentric straps or side rods unless it is necessary. Whenever the eccentric straps are removed on one side, the top of the link should be tied to the short arm of the tumbling shaft to keep it from tipping over, which would prevent reversing the engine. If it is necessary to take

one side rod down, remove the one directly opposite to it; if this cannot be done, then remove all the side rods. Do not remove the eccentric blades, leaving the straps on the eccentrics, unless they will whirl and clear everything in all positions; otherwise they might punch holes in the firebox.

If the side rods have been removed from a ten-wheeled engine, or pony engine, see that the forward crank-pins will clear the cross-head in all positions; if not, take no chances, but disconnect both sides, blocking both cross-heads clear forward or wherever they will clear the crank-pins and have the engine towed in.

Broken Driving Spring or Hanger. If the engine is raised with jacks, block up the end of the equalizer that had been connected to broken part, so that it is a little higher than it was before, to allow for settling. It is customary also to block up between driving box and frame at the box where spring is broken. If it is the forward box, it puts the load on that box, which may be too much. It is better to block up over a back driving box, no matter which spring is broken, as the weight is carried there the best. If the engine is raised by running up on blocks or wedges, put block on top of the box that is under broken spring first, if possible, then run that wheel up on a wedge until engine is raised so that the equalizer can be blocked up level again; then put block over box, also, to carry what weight of engine the spring still at work on that side would not hold up; take out the broken spring or hanger if necessary. If equalizer is under frame and boxes, block under end that will hold it in proper place. If the reach rod is pinched so that the reverse lever cannot move the links, it may be necessary to

take out the pin holding the reach rod to the tumbling shaft arm and handle the links otherwise.

Disconnecting Both Sides. This implies that the engine is dead and must be towed in. Remove both main rods and both valve rods, but it will not be necessary to block either, if the crank pins clear the cross-heads. Do not remove the side rods or eccentric straps unless it is necessary; and when it is considered necessary be sure to take the precautions previously explained.

In freezing weather, if the fire is down, all water should be drained out of the injectors, pumps, feed and branch pipes. If there are not frost plugs, slack the joints and let the water out. If there is danger of the water freezing in the boiler, run it out of both boiler and tank. See that all oil cups are well filled before starting. Almost all roads are very strict regarding the speed of dead or disconnected engines, as the engine is not then counterbalanced perfectly, and is therefore very injurious to the track. Some of the best roads limit the speed of all heavy engines which are disconnected on one or both sides, or which have the side rods removed, or dead engines hauled in a train, to twenty miles per hour.

Broken Equalizers. Raise the engine the same as for a broken spring or hanger when possible to do so. If an equalizer on a standard eight-wheeled engine, block on top of one box and block up the loose end of the equalizer, when possible, the same as for a broken spring or hanger; if it cannot be used, remove the equalizer and block on top of both boxes. If an equalizer is below the frame, do likewise, or chain it up. If forward equalizer on a ten-wheeled engine, block on top of the forward and main boxes, and block

up forward end of back equalizer. If it is the cross equalizer on a mogul, block on top of both forward boxes and block on top of the back end of the long intermediate equalizer that goes to the truck. If the intermediate equalizer breaks, block between the boiler and the cross equalizer. If it is the cross equalizer on a four-wheeled pony, block on top of both forward boxes. When this equalizer is below or between the frames it is sometimes possible to block between the hangers and the frame. If a small equalizer that rides the back box, block on top of the back box and chain up the back end of the bottom equalizer. If it is a truck equalizer, block on top of truck boxes between the box and truck frame. Always remove or secure all loose parts.

Broken Equalizer Stands. If the stand breaks, then use the same remedy as for a broken equalizer, but if only the bolts break find some old bolts to replace them, or take bolts off some other part of the engine that will fit, and the loss of which will not impair the working of the other parts.

Broken Engine Truck Spring Hanger or Center Casting. If a four-wheel engine truck, block over the equalizers and under the top bar of engine truck frame close to band of spring, high enough so the engine will ride level with the other side. With a mogul, over the truck box. If the engine truck center casting breaks on a standard engine, block across under truck frame and center casting and over equalizers, from one side to the other; a couple of pieces of rail, 4½ or 5 ft. long, may come handy for this purpose. Or, put a solid block under the engine frame next to the saddle and on top of the truck frame on each side. This plan will give the use of the engine truck springs,

although it does not always hold the center casting up against the male casting under the smoke arch, so the engine will track straight.

In case it becomes necessary to remove an engine truck entirely from a mogul or consolidation engine, proceed as follows: Block between the cross equalizer and bottom of the boiler; with the engine in this condition, she should be run carefully, as there is quite an additional load on the front driving boxes.

Broken Engine Truck Wheel, or Axle. If a piece is broken out of the wheel, it can be skidded to next side track by laying a tie in front of the pair of wheels. If an axle is broken or a wheel is broken off outside of the box, you can chain that corner of the engine truck up to the engine frame, being careful to chain so as to crowd the good wheel against the rail, and put a block between the top of the engine truck and bottom of the engine frame, on the other end of the same side of truck, in order to put the weight on that part of the truck.

Broken Back Spring on Consolidation Engine. Run the driver up on a wedge; pry up the back end of the equalizer and block between it and rail of frame; then run the back driver off the wedge and the next driver up on it, and block between the back driving box and the frame.

Broken Front or Back Section of a Side Rod on a Consolidation Engine. A consolidation engine has a knuckle joint between the first and second, and third and fourth pairs of drivers. In case of a section on either end breaking, remove the broken parts and the corresponding section on the other side. Be sure that the forward crank pin will clear the cross-head in all positions before moving the engine.

Broken or Loose Tire on Standard Eight-Wheel Engine. If a main tire breaks or becomes loose, raise the wheel center up off the rail a little higher than the thickness of the tire, to allow for the engine settling when blocked up; take out the oil cellar so the journal will not get cut on the edges of the cellar; put a solid block of wood between the pedestal brace and journal to hold the wheel center up clear of the rail; block up over the back driving box so the engine could not settle or get down so as to allow the wheel center to strike the rail. It will take a good deal of strain off the pedestal brace to put a block under the spring saddle on top of the frame. Taking out this driving spring makes a sure job; take off all other broken or disabled parts; if the rods are in good order, leave them up. If a back tire breaks, block up in the same manner as for a main tire, except that blocking comes next to the other journals and boxes.

Broken Main Rod. Remove the broken parts, block the cross-head back to within one-half inch of clearance to keep the cylinder packing out of the counter bore, disconnect cylinder-cock rod on disabled side and block the cocks open. Shift the valve in the same direction as piston if it is a slide valve or outside-admission piston valve, and in the opposite direction if it is an inside-admission piston valve. An easy way to remember and distinguish a direct from an indirect motion is in the position of the rocker arm. With the indirect, one arm is above and the other below the rocker box; with the direct, both arms are either above or below the rocker box. In moving the valve give it just enough opening to show steam at the cylinder cock, which will take the pressure off the blocking.

Broken Frame. For a broken frame ahead of a main

driver, disconnect the valve stem on disabled side, cover ports and leave up the main rod. Bring the engine in light with the good side. If the break is behind the main driver, take down the side rods on rear section only, if a consolidation engine. With a mogul type and the knuckle pin on forward section of side rod, take down all side rods.

Broken Draw Bar. If the engine has safety chains they will hold the tank, but not always a heavy train. If the engine is not equipped with safety chains, then secure a chain from the tank box or caboose and chain the tank to the deck. Safety chains should not have more than 4-in. of slack.

Broken Driving Brass. If a driving brass breaks and is cutting badly, run that wheel up on a thin wedge; then use an iron block between the top of frame and the spring saddle, which will take the weight off that box.

Broken Wedge Bolt. It is sometimes possible to screw the nut half-way onto each part of the broken bolt and thereby hold it up in place. If this cannot be done, then with a wire try to fasten a nut under the wedge to hold it up.

Broken Tender Wheel or Axle. Find a piece of a rail the proper length, or a cross tie will answer, place it across the top of the tank directly over the broken pair of wheels, block under the rail or tie to protect the flange on the top of the tender, jack up the broken pair of wheels to clear the rail and while in this position chain the truck to the rail above the tank on both sides.

Broken Crank-Pin. With a broken main crank-pin, on any class of engine, take down all side rods and be sure that the crank-pin on the forward wheel does not

interfere with the cross-head in blocking the latter. With the back crank-pin on a consolidation or a ten-wheel engine, proceed as with a broken side rod, but if the crank-pin of an intermediate, otherwise known as driver No. 2, take down all side rods and run in light with the main rods up. Remember that taking down one section and not the other on the opposite side is dangerous; there is nothing to pull the wheel on the good side off the dead center. In only one case is this permissible—when the eccentrics are on the first or leading, and the main rod on the second or main drivers. In this instance if the forward section, with a solid end, breaks, the other side is to be left up so as to control the valve motion on the good side; but the valve gear on the crippled side must be disconnected.

Broken Cross-Head. If the break is with a four-bar guide or a Laird guide with yoke, block ahead and let the main rod rest in yoke; but the butt end brass and strap must come down, otherwise the rod would interfere with main pin. If the cross-head is of the alligator type and the yoke secured near the middle of the guide, block back and take down the main rod. It is always a good plan to allow enough port opening, in blocking valves central, to admit a little steam against the piston in the direction of the blocking. Remember also that an outside admission valve is pushed in the same direction as the piston, and an inside admission in the opposite direction.

Broken Eccentrics, Straps and Blades. With a broken go-ahead eccentric or blade, take down the back-up eccentric also. If the back-up eccentric is not disturbed the link lifter must be taken down. With a broken back-up eccentric, strap or blade, the go-ahead eccentric need not come down, but the engine must be

run with a full cut-off and no attempt made to bring the lever back to the center of quadrant.

Disconnected or Broken Throttle Rod. This is generally regarded as a very serious mishap, but the seriousness depends entirely upon the nature of the break. If the throttle is open and cannot be closed, reduce the steam pressure to a point where the engine can be controlled with the reverse lever. It is a good plan to have some cars connected to the engine, in order to get the benefit of the brakes in case an attempt is made to run the engine in with a broken throttle.

Sometimes the valve becomes tilted or cocked and will not close. In such a case tapping the throttle rod with a hammer will sometimes bring it back to its seat. If the throttle is closed and will not open it is very likely that the rod is disconnected inside the boiler, in which case the only remedy is to kill the fire, and prepare to be towed in, unless the company requires the engineers to make repairs.

Broken Whistle Stand. A broken whistle stand means a dead engine. Remove the broken part from the dome. A handy thing to have around an engine is a wash-out plug and several sizes of reducers. In the absence of a wash-out plug use the reducer in the dome cap, then take the nipple and angle cock off an air-braked car and insert into the reducer.

Broken Steam Chest or Cover. When the break is not a bad one, wedging between the chest and bolts is sometimes successful, but where the break is a bad one, remove the cover, block the supply ports, which on modern engines are at each end of the cylinder, with blocking of sufficient thickness to be held down by cover, disconnect the valve stem only, block the

cylinder cocks open, and proceed on one side. The same method applies to a broken cover.

Metallic Packing Giving Out on the Road. Take off the stuffing box or packing case, or whatever it may be called, and if any of the old packing is left, leave a ring of it in the cone or cup; then make, out of wicking or old overalls, a ring of packing sufficiently large to fill the balance of the space in the cone, after which push the cone back against the "follower" on the end of the spring, put on the stuffing box and go along.

Broken Piston Gland Studs. On some of the old power in use on many railways, the fibrous packing is still used to quite an extent, and failure of the gland studs from one cause or another is not uncommon. When this occurs on engines having the four bar type of guides, the stuffing box should be partially filled, so that the gland would go well into it, then by driving a long taper wedge of iron, one on each side, between guides and gland, it (the gland) can be fastened securely and, if the wedges are driven carefully, set squarely. Wedges usually used to secure brake shoes to heads are very suitable for this purpose, but if they are not to be had, any piece of iron of the proper thickness and a little taper can be used. If only one stud is broken, fill the stuffing box as above, and if it is the top stud, use a piece of board to block from the oil cup on each guide to the top of the gland, driving a wooden wedge between back of the gland and cylinder head to prevent the gland wiggling and working blocks out. Never disconnect, or give up a train for this sort of failure.

Broken Piston Rod. Time can be saved when this occurs by doing just what is necessary and no more. If the rod breaks at the cross-head, as is usually the

case, or near the piston, and the whole thing is blown out, cylinder head and all, just disconnect the valve rod and cover the ports, and go along.

Broken Driving Brass. Run the wheel upon a frog or wedge and block up between the frame and spring saddle, to take the weight as much as possible off the box.

With an engine having underhung springs there is no saddle to block under, and in a case of this kind place a jack under the equalizers nearest to the broken brass, then block the other end between the frame and the equalizer and remove the spring under the broken brass if possible.

Broken Driving Axle. This occurs usually close to the wheel and outside of the driving box. If it is a broken main driving axle, all rods on the disabled side and all side rods on the good side must come down. With any other driving axle, only such rods should come down as would give trouble to the rest of the rods.

To block up the axle on the broken side, remove the cellar and put a wooden block between the axle and the binder brace. If a hydraulic or screw jack is handy, raise the axle and driving box, if it has an overhung spring and block under the spring saddle above the frame to take the weight off the driving box. Use sponging on the sides of the blocking under axle or, better still, hot main-pin grease.

Water Glass Out of Order. If the water line in the glass is not in sight, and moving up and down when the engine is in motion, it indicates that the water glass valves are either stopped up or closed, and require immediate attention.

The blow-out cock at the bottom should be opened. If the water line now shows in the glass, and then sud-

denly rises out of sight when the blow-out cock is closed, it indicates that the water level in the boiler is higher than the top end of the glass. If only steam or a mixture of steam and water passes out through the blow-out cock it is evidence that the water in the boiler is too low, and if no water shows in the glass when blow-out cock is closed, the fire should be deadened at once. Every engine should be equipped with gauge cocks, and they should be tried every ten or fifteen miles passed over on the route.

If gauge cocks and lower water glass valve are stopped up, get engine and train off the main line onto a siding as soon as possible. Deaden or dump the fire, and report conditions. No engine should be worked in that condition.

If an Engine Works Water. Close the throttle a little at a time, until the water ceases to pass over into the cylinders. If it was foaming this would stop the trouble in the cylinders and the water level in the boiler would drop at once. If the boiler was pumped too full the water level would be above the gauge cocks.

When the Boiler Foams Badly. There is danger of knocking out cylinder heads, cutting the valves, stalling on some grade, or getting on some train's time because the engine cannot be worked to its proper power. There is also danger of burning the crown sheet when the water drops low enough to uncover it.

Broken Blow-off Cock, or Hole Broken in the Boiler. Either dump the fire or smother it with wet coal; get steam and water out of the boiler as quickly as possible. If the blow-off cock is broken off it may be plugged, but if it is blown out, it would be impracticable to plug the opening, and the only method is to

treat such a case the same as with a hole knocked in the boiler, viz.: Disconnect the engine and be towed in.

If the water supply in the tender fails while out on the road away from a water tank, in warm weather, if possible, bail enough water into the tank to get to a water tank, and then fill up the tank. If in winter, and there is snow on the ground, shovel snow into the tank and melt it with steam from the boiler. If impossible to get water by the methods explained, draw the fire, disconnect the engine and be towed in.

If after getting a supply of water in the tank, the fire being dumped, and no steam in the boiler, it is found that the water level in boiler is below the crown sheet, the boiler may be refilled in the following manner by towing the dead engine with another engine. To do this, stop up all the openings where the outside air can get into the boiler or cylinders and steam chests (whistle, relief valves, etc.), open the throttle and steam and water connections to the injectors, put the reverse lever the way the engine is going and be sure to have her towed fast enough to create a vacuum in the boiler by the cylinders pumping the air out. The boiler can also be filled by connecting a hose to the overflow or delivery pipe of the injector on the live engine, and then to the suction pipe of the injector of the dead engine, or through the whistle or safety valve. A great many modern engines have wash-out plugs high enough to fill boiler to one gauge.

If an Injector Will Not Work. Be sure the injector gets a full supply of steam; the steam throttle may be only partially open. Some injector steam pipes are coupled to a turret; if the valve between the boiler and the turret is partly closed the injector may not get a full supply of steam and will not pick up the

water. In this case a full supply of water is passing through the injector, but there is not sufficient steam to force the water into the boiler.

Examine the tank to see how much water there is in it; if plenty there, examine the hose, strainers and supply pipe to see if the injector could get the proper supply of water promptly; next, see if there were any leaks that would let air get into the supply pipe of a lifting injector; last, see if any foreign substance has got into the injector and choked any of the passages.

If an Injector Will Not Prime. The water may be all out of the tank, or the tank valve disconnected; air may be leaking into the supply pipe, the overflow valve stopped up or choked some; or the jet of steam may not pass exactly through the middle of the tube which exhausts air or starts the flow of the water.

If an Injector Primes Well, and Then Loses Its Priming When Steam Is Turned On Full. The boiler check valve may be stuck shut so the water cannot get away from the injector, the tubes may be coated with lime so they are too small or not of the proper shape, the tubes may be loose so they are not in line, or the supply of water may not be sufficient to condense all the steam; this may be on account of the feed water being hot.

When the boiler check valve sticks open or allows the boiler pressure to back up to the injector, jar the check case or delivery pipe a little so the check valve will settle into its seat. If it does not seat tight but leaks back, report its condition on arrival at terminal. Sometimes something will get into the delivery pipe and work under the check valve, holding it open; when the check is ground in, this foreign substance, which may be a part of the injector, will drop back into the delivery pipe and lie there till the injector is worked

the next time, when it will get under the valve and hold it up again. Take off the delivery pipe and clean it out.

In Case of Bursted Flue. Dump the fire and lower the steam pressure as soon as possible in order to save the water in the boiler, then proceed to plug the flue with an iron plug if one is available. If no iron plug is at hand, use a wooden one, driving it into the flue for some distance. It will not burn, because no air can get at it. By putting on the blower slightly and putting a plank down on the grates, a man can often succeed in plugging a flue before the pressure is all out of the boiler.

Care should be exercised in driving an iron plug not to drive too hard, as there is danger of cracking the flue sheet.

In case of a boiler in which the flues are old and inclined to leak at the beads, pump the boiler as regularly as possible; have a bright, even fire; use great care that no cold air strikes the flues through the door or through holes in the fire near the flue sheet. Keep an even pressure of steam, as this means a steady temperature in the firebox. If possible, when going into the round house, leave two or three inches of fire on the grate after shaking out the old dead fire. This fire will die out slowly, so the fire box and flues will cool off slowly. The dampers should be closed after going into the house.

Be very careful in the use of the blower, that no cold air is drawn against the flues; this especially applies to the operation of cleaning the fire. Cold air contracts the flues, also the metal of the flue sheet, which causes them to begin leaking at once.

In Case the Lubricator Refuses to Work. First, see if

the steam valve to the boiler is open, then shut off the water valve from the condenser and open the drip valve in bottom of the oil tank; this would blow the water out of the glasses into the oil tank, with some makes of cups, and as soon as the glass filled up with water they might feed again. Or, shut off steam and water valve and open drip cock, then give engine steam and have steam from steam chest blow through the chokes, and clean them out. With the new style of cups having check valves, open the drip from the glass, blow it out clean and refill it with water. Lubricators usually stop feeding because some small openings are stopped up or something is wrong inside the cup.

The successful lubrication of valves and cylinders on long runs, with engines run at short points of cut-off, has been quite a difficult problem, and new ideas are being brought out all the time, and if the engineer is to be able to keep up with the rapid changes and developments that are coming along, it will be necessary for him to watch the lubricator question sharply.

Under certain conditions, the oil, as it is fed from the cup into sight feeders, does not pass to the steam chest direct, but this is no excuse whatever for running a dry valve, because a man who knows his business, in case of his valves getting a little dry, will ease off, almost shut off, for one second. This will drop the steam chest pressure, probably to about one-half of what it is ordinarily, at which time the strain at the lubricator will blow the oil and water from the pipe into the steam chest. The loss of time necessary to do this will not amount to as much in a trip as running a partially dry valve one mile would.

Engines that are being worked at a long cut-off do not, as a rule, give any trouble on account of valves

running dry, because the pulsations of the steam chest pressure will render it impossible for water or oil to remain in one position in the pipe; it will work down, and in a few minutes after the lubricator is started the valves will receive the oil as regularly as it is fed from the cup.

The cases wherein the oil does not feed down regularly are when high pressure engines are run at high speed and short cut-off under full throttle. This can be explained in a few words, as follows: In the first place, when an engine is being run as above, the steam chests have almost boiler pressure and the steam that is admitted before the piston gets to the limit of its travel is, by the process of compression, to a certain extent, driven back into the steam chest, the effect of which is, owing to the necessary frequency of such action at high speed, that the steam chest pressure is stimulated to that extent that it is, perhaps, slightly higher, or at least equal to boiler pressure, in which case condensation will take place in the oil pipe near the steam chest and work upward; then the oil that leaves the lubricator will descend in the pipe, only until it comes in contact with the water in the same, and will remain there until the throttle is eased or shut off.

Broken Main Valve Rod. Put the valve on the center of the seat, so that it will cover all the ports on that side; disconnect the main-rod and block the cross-head the same as for simple engine.

BREAKDOWNS ON COMPOUND ENGINES, VAUCLAIN

Both High-Pressure Cylinder Heads Gone. If the stuffing-box could be made steam-tight, the steam

valves would supply live steam direct to the low-pressure cylinders, but it would be doubtful if it could be done, owing to the lack of material for the same on an engine.

Broken High-Pressure Cylinder Head. Block the valve on the disabled side in its central position so as to cover the ports, disconnect the main rod and block the cross-head the same as with a simple engine. Run in with the other side, working compound if possible and simple if necessary, as it probably will be.

Broken High-Pressure Piston Rod or Piston Head. Remove the broken piston and rod and plug up the piston-rod hole in the cylinder-head from the inside with a wooden plug; then replace the head or heads and run in light.

Broken Low-Pressure Cylinder Head. Run with the starting-valve in compound. This would give the simple engine of the dimensions of the high-pressure cylinder. The exhaust from the high-pressure would necessarily go through the low-pressure cylinder and to the stack; but it would be very serious on the fire and would reduce the steam.

Broken Low-Pressure Piston Head or Piston Rod. Remove the piston and rod and plug the piston-rod hole and run light with the starting-valve in compound.

Baldwin Two-Cylinder Compounds. *Broken Main Rod, High-Pressure Side.* Remove the broken rod, block the cross-head at the back end of the guide, clamp the high-pressure valve in the center to cover both ports. Place the engineer's operating valve at point marked "simple." The steam will then pass through the reducing valve to the receiver and thence to the low-pressure cylinder.

Broken Main Rod, Low-Pressure Side. Remove the

broken rod, block the cross-head at the back end of the guide, disconnect the valve rod and close the plug cock in the pipe leading to the intercepting valve. Place the engineer's operating valve at the point marked "compound." The steam will then act in the high-pressure cylinder and pass to the exhaust without entering the low-pressure cylinder.

For Valve Stem on Either Side. The same remedy as for a broken rod.

For the Intercepting and the Reducing Valve. The intercepting and reducing valves are automatically operated by steam pressure. Access can be easily had to either of these valves by removing the head of their respective cylinders, and any failure of the valve to act can be readily ascertained and remedied.

Schenectady Cross Compound. *Broken Main Rod, High-Pressure Side.* Remove the broken rod, blocking the cross-head at the front end of the guides. Clamp the high-pressure valve forward to clear the exhaust port; the steam will then pass through the exhaust port on the high-pressure side into the receiver, thence to the low-pressure steam chest. The low-pressure cylinder then acts as a high-pressure engine. Open the throttle valve moderately on account of the large area of low-pressure cylinder.

Broken Main Rod, Low-Pressure Side. Remove the broken rod, secure the cross-head at the back end of the guides; clamp the low-pressure valve back far enough to clear the exhaust port. Exhaust steam can then pass through the low-pressure cylinder and out through the stack.

Broken Valve Stem on Either Side. The same remedy as for a main rod on that side; also remove the main rod and secure it as previously instructed.

Intercepting Valve Disabled. Should the intercepting valve become disabled, clamp the poppet valve open, if possible; if not, then remove the back head from the intercepting valve steam cylinder, and push the piston forward, putting in a block to hold it in that position; then put on the head, which will prevent the steam in the receiver closing the poppet valve. The same may be done with the small piston which moves the valve, admitting steam to the intercepting valve steam cylinder; this will also prevent closing the poppet. Live steam would then be admitted to both cylinders for starting.

Baldwin Tandem Compound. *Broken Cylinder Head.* This would be a very serious case, and it would be necessary to clamp the valves centrally over the ports on the damaged side, and go in on one side.

To Test for Leaks and Blows. The Baldwin tandem compound is tested in the same manner as other tandems.

Questions

551. What are the qualifications in general that a locomotive engineer should possess?

552. What will a careful engineer always do before starting out with his engine?

553. What should he do with the rod keys before leaving the roundhouse?

554. What special tools should be carried on the tender, to be used in case of breakdowns?

555. When an engine suddenly begins to go lame in her exhaust, what does it indicate?

556. How is a dry valve easily detected?

557. Mention some other causes besides those

previously enumerated that may be responsible for a lame exhaust.

558. If an eccentric has slipped, how may it be located and reset?

559. If it is necessary while out on the road to place the engine on a center, how may it be done in a hurry?

560. What is to be done in case of a broken eccentric, or a broken valve rod?

561. If the reach rod, or arm of tumbling shaft, should get broken, what should be done?

562. When a valve seat becomes broken, what should be done?

563. At what point does a valve yoke usually break?

564. How may a broken valve yoke be discovered?

565. Mention several remedies for this kind of a breakdown.

566. How may a broken gib or plate on the cross-head be taken care of?

567. If the cross-head is badly broken, what should be done?

568. What is the only remedy for a broken main rod, or strap?

569. In case of a broken side rod or strap, what should be done?

570. What is necessary in case of a broken back cylinder head?

571. In case a forward cylinder head breaks, what may be done?

572. What is to be done with broken guides, blocks, or bolts?

573. If a guide yoke is bent or broken, what should be done?

574. What is implied when but one side is disconnected?

575. How should the cross-head be secured when one side is disconnected?

576. What is to be done with the valve in case one side is disconnected?

577. If it is necessary to remove the eccentric straps, what must be done with the link?

578. If it becomes necessary to take down one side rod, what must be done with the one opposite to it?

579. If the eccentric blades are removed and the straps left on the eccentrics, what precautions should be taken?

580. If the side rods on a ten wheeler have been removed, what precaution must be taken?

581. In case of a broken driving spring or hanger, what method should be pursued, if the engine is jacked up?

582. If the engine has been raised by running her up on blocks, what is the best method of procedure?

583. When both sides are disconnected, what is implied?

584. In case the engine must be towed in, and the weather is freezing, what precautions should be taken?

585. How is a standard eight wheeler to be blocked up in case of a broken equalizer?

586. If the engine is a ten wheeler, how is a broken forward equalizer to be blocked?

587. If an intermediate equalizer on a mogul breaks, what is to be done?

588. If a cross equalizer on a four-wheeled pony engine breaks, how is it to be blocked?

589. If a truck equalizer breaks, how is it to be taken care of?

590. If an equalizer stand breaks, what is the remedy?

591. In case of a broken engine truck spring hanger

or center casting on a four-wheel truck, how is it to be blocked?

592. How should a mogul engine truck be blocked, if spring hanger is broken?

593. If engine truck casting breaks, what should be done?

594. How may a mogul or consolidation engine be blocked so as to run, in case it is necessary to remove the engine truck entirely?

595. What may be done with a broken engine truck wheel or axle?

596. What is to be done in case of a broken back spring on a consolidation engine?

597. How may a consolidation engine be fixed up so as to run with a broken front or back section of a side rod?

598. What is to be done with a broken or loose tire on an eight wheeler?

599. What is the best method to pursue in case of a broken main rod?

600. Mention an easy way to remember and distinguish a direct from an indirect valve motion.

601. In case of a broken frame, what should be done?

602. What may be used to replace a broken draw bar?

603. What should be done when a driving brass breaks?

604. What may be done in case of a broken wedge bolt?

605. When a tender wheel or axle breaks, what may be done to enable the engine to proceed?

606. What is to be done with any class of engine in case of a broken main crank-pin?

607. When the back crank-pin of a consolidation or ten-wheeled engine is broken, what is to be done?

608. If the broken pin is on an intermediate driver, what must be done?

609. What should always be remembered when disconnecting an engine?

610. Under what conditions is it permissible to disconnect a section of one side, and not the same section on the opposite side?

611. What is to be done with a broken cross-head if the guide is a four bar, or Laird guide?

612. If the cross-head is of the alligator type, what should be done?

613. What is a good thing to remember when blocking valves central?

614. What must be done when a go-ahead eccentric, strap, or blade breaks?

615. In case of a broken back-up eccentric, strap, or blade, what is necessary?

616. What may be said of a broken or disconnected throttle rod?

617. If the throttle is open and cannot be closed, what should be done?

618. What is a good plan to pursue in case an attempt is made to run in with a broken throttle?

619. If the throttle becomes tilted or cocked, how may it sometimes be seated?

620. If the throttle is closed and will not open, what is the only remedy?

621. What does a broken whistle stand mean?

622. What is a handy thing to have around an engine?

623. With a broken steam chest or cover, what methods may be pursued?

624. In case of metallic packing giving out on the road, what is to be done?

625. When a piston gland is broken, how may the break be remedied?

626. What should never be done in case of this sort of a breakdown?

627. What should be done when a piston breaks?

628. What is to be done in case of a broken driving brass?

629. If the engine has underhung springs, and a driving brass breaks, what should be done?

630. At what point does a driving axle usually break?

631. If a main driving axle is broken, what must be done?

632. If the broken axle is not a main driving axle, what should be done?

633. How is an engine with a broken driving axle to be blocked up?

634. If the water line in the glass is not in sight and moving, what does it indicate?

635. What should be done immediately in this case?

636. How is too high a level of water in the boiler indicated?

637. What indicates too low a level of water in the boiler?

638. If no water shows in the glass when the blow-out cock is closed, what should be done at once?

639. What should always be done with the gauge cocks?

640. If both the water glass and gauge cocks are stopped up, what should be done as soon as possible?

641. What should be done in case an engine works water?

642. What are some of the dangers incurred when a boiler foams badly?

643. In case of a broken blow-off cock, or a hole broken in the boiler, what should be done?

644. What may sometimes be done with a broken blow-off cock?

645. If the water supply in the tender fails while away from a water tank, what should be done?

646. If this should occur in the winter with snow on the ground, what may be done to obtain a supply of water?

647. How may a dead engine be pumped up, and the boiler refilled by another engine?

648. By what other method may a boiler that is dead, and partly empty, be refilled out on the road?

649. What is to be done in case an injector refuses to work?

650. What are some of the things to be looked after, when an injector will not work?

651. If an injector will not prime, what are some of the probable causes of it?

652. If an injector primes readily, and then loses its priming, what are some of the various causes?

653. If the boiler check valve sticks open, how may it sometimes be righted?

654. What other causes may be responsible for the check valve not working properly?

655. What is to be done in case of a bursted flue?

656. If no iron plug is at hand, what may be used to plug a bursted flue?

657. What precaution should be observed in the driving of an iron plug into a bursted flue?

658. What should be done with a boiler having old and leaky flues?

659. How should the blower be used on such a boiler?

660. What effect does cold air have upon the flues, and flue sheet?

661. What is one of the first things to do in case the lubricator refuses to work?

662. How may it be cleaned out?

663. What is usually the cause of a lubricator not feeding the oil properly?

664. Is there any excuse for running a dry valve?

665. What may be done towards forcing the oil to pass into the steam chest?

666. Under what conditions is it difficult to get the oil to feed regularly?

667. What causes tend to bring about such conditions?

668. What is to be done with a Vauclain compound, in case of a broken main valve rod?

669. What may be done with a Vauclain compound when both high-pressure cylinder heads are gone?

670. In case one high-pressure cylinder head on a Vauclain breaks, what should be done?

671. If a high-pressure piston rod or piston head should break, what is to be done?

672. What may be done with a Vauclain compound if one of the low-pressure cylinder heads is gone?

673. If a low-pressure piston head or piston rod breaks, what is the remedy?

674. If the main rod on a Baldwin two-cylinder compound breaks, how may the engine be run?

675. If the same break should occur on the low-pressure side, what should be done?

676. If a valve stem on either side of a Baldwin cross compound should break, what is the remedy?

677. If either the intercepting or reducing valve on a Baldwin two-cylinder compound fails to work, what may be done?

678. What is to be done with a Schenectady two cylinder compound in case of a broken main rod on the high-pressure side?

679. In case a similar break occurs on the low-pressure side, what should be done?

680. What is the remedy for a broken valve stem on either side of a Schenectady cross compound?

681. In case the intercepting valve becomes disabled, how may a Schenectady two cylinder compound be operated?

682. In case of a broken cylinder head on a Baldwin tandem compound, what is to be done?

683. How are Baldwin tandems tested?

684. Under what conditions is it allowable to operate a compound locomotive as a single expansion engine?

CHAPTER XI

THE MODERN AUTOMATIC AIR BRAKE

As an element of safety, and also of convenience, in the running of railway trains, the automatic air brake stands at the head of the long list of appliances that have come to be considered necessary in railroad practice. The engineer is, or at least should be, particularly interested in this truly wonderful device, for the reason that he is responsible for its application at the proper time, and in the proper manner. It is fitting, therefore, that a space be devoted to a discussion of the principles of the construction and action of the air brake, together with suggestions and advice regarding its care and operation. The author desires in this connection to acknowledge his indebtedness for the larger part of this matter to Mr. Frank H. Dukesmith, M. E., former superintendent of air brake construction for the International & Great Northern Railroad, and the Texas & Pacific Railway, also author of "Modern Air Brake Practice, Its Use and Abuse," a good book for engine men and train men. Both systems of air brake, viz., the Westinghouse and the New York air brake, will be described and illustrated, commencing with the Westinghouse.

The Westinghouse Air Brake Equipment. The full and complete equipment of a modern Westinghouse quick-action automatic air brake is composed of twelve essential parts, as follows:

1. The steam-driven air pump which supplies the compressed air.

2. The main reservoir in which the compressed air is stored.

3. The engineer's brake valve by which is regulated the flow of air from the main reservoir into the train-pipe for charging and releasing the brakes, and from the trainpipe to the atmosphere for applying the brakes.

4. The duplex air gauge, which shows simultaneously the pressure on the trainpipe (black hand), and in the main reservoir (red hand).

5. The pump governor, which regulates the supply of steam to the pump, causing it to automatically stop when the desired maximum of pressure has been accumulated in the air brake apparatus.

6. The trainpipe, which connects the engineer's brake valve and each triple valve in the train, and includes the air hose and hose couplings between cars.

7. The quick-action triple valve, which is connected to the trainpipe, auxiliary reservoir and brake cylinder and pressure-retaining valve. The triple valve operates automatically whenever the pressure in the train-pipe is reduced lower than that in the auxiliary reservoir, and performs three functions: charges the auxiliary, applies the brakes and releases the brakes, as will be fully explained hereafter.

8. The auxiliary reservoir, in which is stored the air pressure for applying the brake (on each car, engine, or tender, there is an individual auxiliary reservoir).

9. The brake cylinder, in which there is a piston and piston rod, which is connected to the brake levers in such a manner that when the triple valve is moved to allow the auxiliary pressure to flow into the brake

cylinder, the brake piston is thereby forced outward, which causes the brakes to apply.

10. The pressure-retaining valve, which is connected to the triple exhaust by a small pipe. On freight cars the retaining valve is located on the end of the car near the top, just below the staff of the hand brake, and is for the purpose of enabling the brakeman to retain a pressure of fifteen pounds in the brake cylinder while the engineer is recharging the auxiliary reservoir. While the handle of the retaining valve is turned up, the brake cannot be released from the engine, neither can it be "bled off" by the bleed cock of the auxiliary, for the reason that the cylinder must discharge its air through the triple exhaust, and when the retaining valve is closed it means that the triple exhaust is also closed. It is very important that brakemen thoroughly understand the operation of the pressure-retaining valve, as many accidents are due to ignorance or negligence in the working of this device.

11. The automatic slack adjuster automatically maintains the travel of the brake-cylinder piston at a given distance. For instance, if the piston travel is set for eight inches it will automatically keep it there. The slack adjuster is piped direct to the brake cylinder, so that every time the brake is applied the adjuster is operated automatically.

12. The air brake release signal is for the purpose of signaling the engineer and train crew whenever a brake sets, releases or sticks, leaks off or has too much piston travel, and locates defective triples and enables the trainmen to release the brake while the train is running, without having to get off the car. It is located on the top at the end of freight cars opposite the end on which is located the pressure-retaining valve

and, like the slack adjuster, is piped direct to the brake cylinder, so that whenever there is sufficient pressure in the brake cylinder to apply the brake, the same pressure causes the signal to appear above the top of the car in full view of the train crew, and when the pressure in the brake cylinder is exhausted through the triple valve, or leaks out around the packing leather in the brake cylinder, the signal is automatically withdrawn, showing that the brake is not set. Should the signal remain up and the triple valve fail to release the brake, as it should do when in perfect condition, the brakeman could from the top of a freight or the inside of a passenger car release the brake by simply pressing a valve, without having to stop the train, thereby avoiding slid-flat wheels, pulled-out draw-heads, stalling on grades, heating of wheels, and consequent wrecks. On flat cars and gondolas the signal is shown from the sides of the car, one on each end. On passenger trains the signal is located at the side of the door in both ends of the car, so that the signal can be seen at once by the conductor or brakeman, regardless of the direction in which they might be going when passing through the train.

The Westinghouse Air Pump. The air pump, being located on the engine, and directly under the supervision of the engineer, will be first considered. Three sizes of air pumps are being manufactured at present by the Westinghouse Air Brake Co., viz.: the 8-inch pump, the 9½-inch pump, and the 11-inch pump.

The 8-Inch Pump. The cut, Fig. 224, is a sectional view of the 8-inch pump, the different parts being numbered and named.

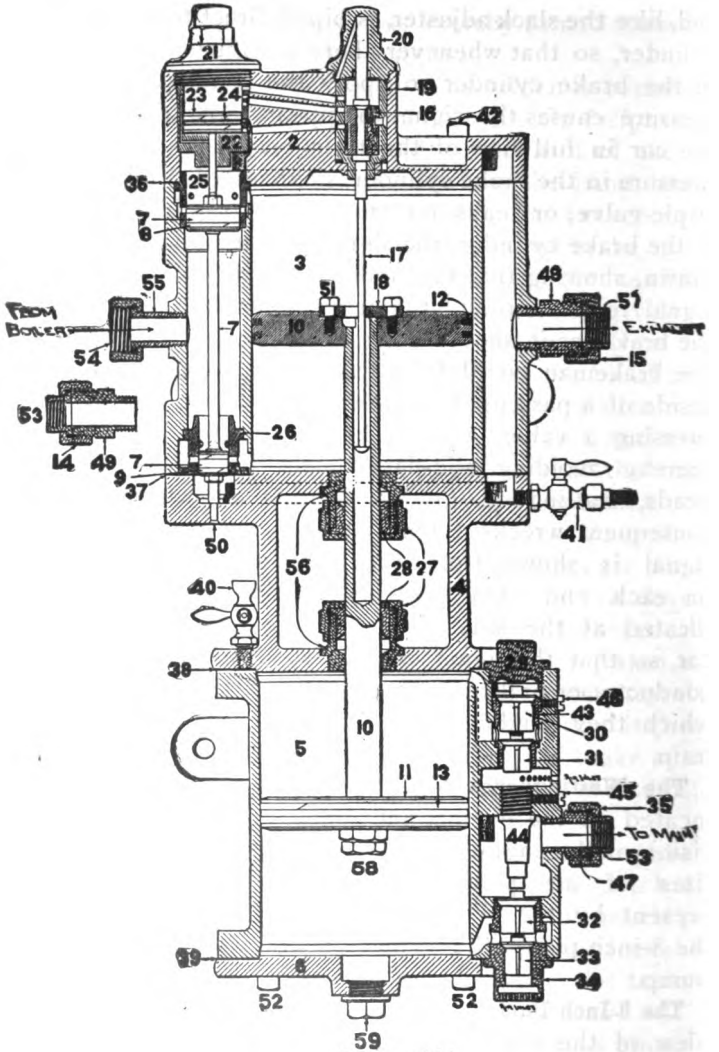

FIGURE 224

EIGHT-INCH PUMP.—See opposite page.

EIGHT-INCH PUMP ON THE UP-STROKE

54. Boiler connection.
7. Main valve.
7-8 and 7-9. Large and small piston of main valve.
25 and 26. Main valve bushings.
50. Stop pin.
23. Reversing piston.
16. Reversing valve.
17. Reversing valve stem.
18. Reversing plate.
10 and 11. Main steam and air pistons.
3. Steam cylinder. 4. Neck. 5. Air cylinder.
57. Main steam exhaust.
41. Drain cock.
30 and 32. Discharge valves.
31 and 33. Receiving valves.
53. Main reservoir connection.

The 8-inch pump is so called on account of the bore of the cylinders being eight inches. It has two cylinders; the one on top, 3, is the steam cylinder, and the one below, 5, is the air cylinder. They are joined together by a neck, 4, and in the top of the air cylinder and bottom of the steam cylinder there are stuffing boxes, 56, through which passes a piston rod, on each end of which there are piston heads, 12 and 13. The piston rod, 10, is hollow for a sufficient depth to admit the stem, 17, of the reversing valve, 16. The reversing plate, 18, is bolted on top of steam piston, 10, so that it strikes the button on the stem, 17, as the piston approaches the end of its down-stroke, and strikes the shoulder of the stem, 17, as it makes the up-stroke, for the purpose of changing the position of the reversing valve, 16, which reverses the stroke of the pump.

The valves through which the air is received and

discharged are all in the lower, or air end of the pump.

The action of the steam end of the pump is as follows: Steam from the boiler enters the pump at the union swivel, 54, and besides filling the chamber which contains the main valve, 7, passes through a port in the wall of this chamber and through a passage (not shown in Fig. 224) to the chamber in which the reversing valve works, thereby constituting the main valve chamber and the reversing valve chamber as the two steam chests of the pump.

From the reversing valve chamber the steam passes through a small port into the space occupied by the reversing piston, 23, as shown in Fig. 224, and as the combined area of piston, 23, and small piston, 9, is greater than the area of the large piston, 8, the main valve, 7, is forced down until the small piston strikes the stop pin, 50, and thus uncovers the port in bushing, 26, which admits steam to the underside of main piston, 10, forcing it up.

As the main piston moves up, Fig. 224, it strikes the shoulder of stem 17, and thus changes the position of the reversing valve, so that the top port in its chamber is closed to piston 23, and the two lower ports are connected by the cavity in the reversing valve, which allows the steam to flow from off the top of piston 23, and pass under it into the exhaust passage across the head, as shown by dotted lines, to the main exhaust. When the pressure is thus shut off from piston 23, the main valve rises and causes the small piston to close the steam port to the under side of the main piston, and opens the exhaust port leading into the passage in the bottom of the cylinder, shown by dotted lines, and out at the main exhaust; at the same time piston 8 of

the main valve closes the top exhaust port in bushing 25, and opens the supply port through the bushing, and thus admits steam on top of the main piston, which drives it down.

In making the down-stroke, Fig. 224, Plate 18 engages the button on stem 17, and again changes the position of the reversing valve, which again admits steam on top of the reversing piston, which causes the main valve to move down as before, and piston 8 uncovers a port in the bushing 25, which exhausts the steam from off the top of the main piston, and at the same time piston 9 opens the supply port in bushing 26, which admits steam to the under side of the main piston, and at the same time closes the lower exhaust. The pump has now made a complete double stroke.

Drain cock 41 must always be opened before the pump is started, and left open until the pump is warmed up, or until there is about thirty pounds pressure in the main reservoir, and great care must be taken to start the pump slow, to avoid pounding and jarring, as the condensation cannot be compressed, and there must be an air cushion for the piston head to strike against in the lower cylinder

The action of the air end of the pump is as follows: There are four air valves; two are called receiving valves, 31 and 33, and two are called discharge valves, 30 and 32. There are two valve cages, 34 and 43, and as the discharge valves have a greater area than the receiving valves, in the 8-inch pump, the flow of air past the valves is determined by the lift each valve has; the receiving valves have a lift of $\frac{1}{8}$-inch, while the discharge valves have a lift of $\frac{3}{32}$-inch, or $\frac{1}{32}$ less than the receiving valves.

These standards must never be changed, as too much

lift of any of the valves will cause the pump to pound, and not enough lift will cause it to run hot.

The way in which the pump receives and discharges air is as follows: When piston 11 is drawn up by steam piston 10, there is a partial vacuum formed in the air cylinder beneath piston 11, and as the atmospheric pressure is about fifteen pounds to the square inch, the receiving valve 33 is forced off its seat by the air rushing in to fill up the space created by the partial vacuum, and if the piston was to stop when it reached the top, the valve would be seated by its own weight when the pressure inside and out of the cylinder equalized; but as the piston reverses just as it reaches the top, the valve is forced to its seat and held there by the compression of the air on top of it, and if the valve has too much lift the pound heard when the valve is seated is great in proportion.

When the piston starts on the down-stroke it compresses the air higher and higher as it nears the bottom, and when the pressure in the pump becomes greater than that in the main reservoir, the lower discharge valve, 32, is forced up and the air from the pump rushes into the main reservoir, until the valve is seated by the main reservoir pressure becoming greater than that in the pump.

The action of the top receiving and discharge valves is the same as the lower ones, except on the opposite stroke.

The 9½-Inch Air Pump. The cut, Fig. 225, is a sectional elevation of the 9½-inch pump, and for purposes of explanation is subdivided into Sections 1, 2 and 3.

The 9½-inch pump differs from the 8-inch pump in several ways. In the first place it is larger by 1½

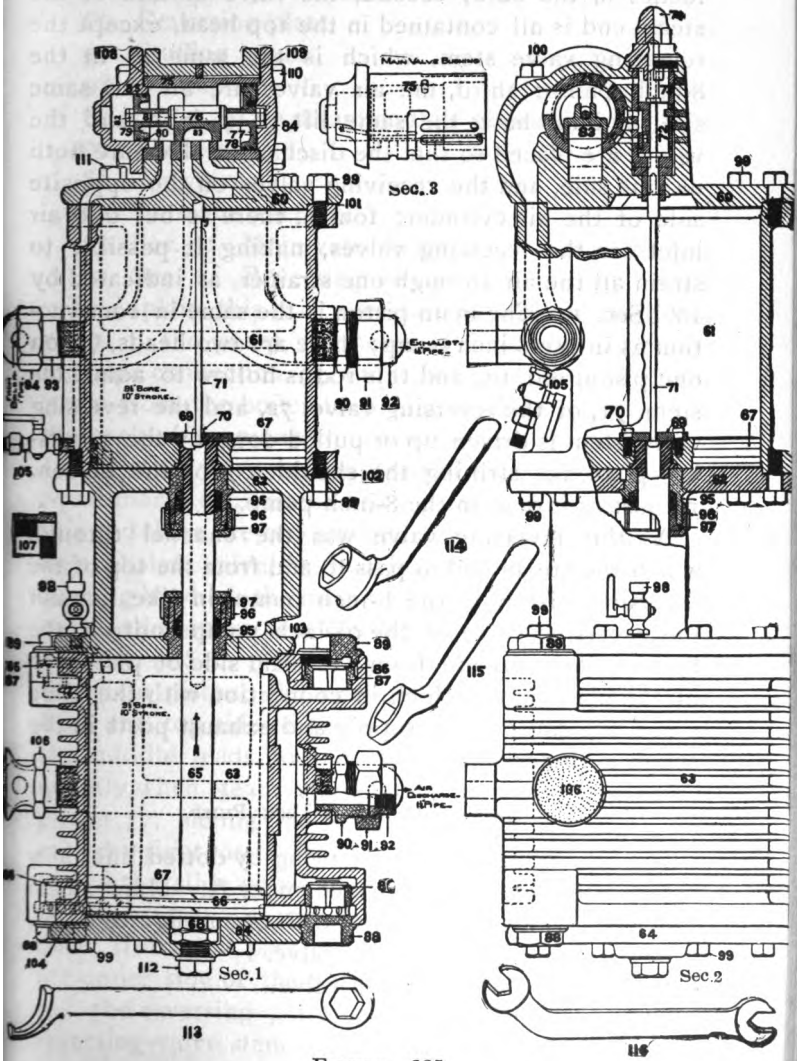

FIGURE 225

NINE AND ONE-HALF INCH PUMP —See page 520.

inches in the bore; second, the valve motion of the steam end is all contained in the top head, except the reversing valve stem, which is the same as in the 8-inch pump; third, the air valves are all the same size, and all have the same lift of $\frac{3}{32}$-inch, and the valves are placed so that the discharge valves are both on one side, and the receiving valves on the opposite side of the air cylinder; fourth, there is but one air inlet for the receiving valves, making it possible to strain all the air through one strainer, as indicated by 106, Sec. 1. The main piston is the same in construction as in the 8-inch pump; there are two heads, 67, on one piston rod, 65, and this rod is hollow to admit the stem, 71, of the reversing valve, 72, and the reversing valve stem is driven up or pulled down by the reversing plate, 69, striking the shoulder, *j*, or the button, 70, just as it does in the 8-inch pump.

As the reversing valve was the channel through which the steam had to pass to and from the top of the reversing piston in the 8-inch pump, in like manner the reversing valve in the 9½-inch pump controls the flow of steam to and from the plain side of piston 77 of the main valve, which in connection with the slide valve, 83, controls the supply and exhaust ports in the steam cylinder.

Nine and One-half Inch Pump

94. Boiler connection, showing by dotted lines how steam passes to main valve chamber A. Main steam exhaust is indicated by dotted lines and figures 61-92.
77. Large piston of main valve.
79. Small piston of main valve.
83. Slide valve.
105. Drain cock.

71. Reversing valve stem.
69. Reversing plate.
97. Stuffing boxes.
98. Oil cup.
65 and 67. Main steam and air pistons.
106. Air inlet.
86. Air valves.
92. To main reservoir.
75. Sec. 3. Main valve bushing.
72. Sec. 2. Reversing valve.

To explain this it is necessary to use two sectional views of the pump, as shown in Fig. 225. In Sec. 1 the pipe connection, 93, shows by dotted lines how the steam from the boiler is carried through a passage in the back of the pump to the main-valve chamber.

The main valve is composed of two pistons of unequal diameters, fastened to a suitable rod, 76, and on this rod there are two shoulders between which a common D slide valve, 83, is held. Sec. 3 represents the bushing in which the main valve and slide valve works.

The slide-valve seat has three openings; the one on the left, in Sec. 1, leads to and from the under side of the main piston; the one on the right leads to and from the top side of the main piston, and the one in the middle leads to the main exhaust, 92. Consequently when steam enters the main-valve chamber the piston 77, having the largest area, is forced to the extreme right, as in Sec. 1, against the head 84, which causes the slide valve to uncover a port in the seat so that the steam can pass from the main-valve chamber down through a passage in the side of the cylinder to the under side of the main piston, which forces it up, and the reversing plate strikes the shoulder, *j*, on the reversing-valve stem, which drives the reversing valve

up and allows the steam in the reversing-valve chamber to pass through the lower horizontal port in the main-valve bushing (see Sec. 3) into the chamber between the head 84, and piston 77. As this balances the pressure on both sides of the large piston, 77, the small piston 79 now pulls the slide valve to the opposite end of the chamber, which uncovers the supply port to the top of the main piston and allows the steam to force it down, and at the same time the steam from the under side is being exhausted by way of the cavity in the slide valve, which now has the lower supply port and the main exhaust connected.

The reason the small piston pulls the large piston over, after the pressure is balanced on both sides of piston 77, is because there is a small port between the plain side of piston 79 and the head 85, which is always open to the main exhaust, so that no back pressure can remain in the chamber indicated by 82, and no partial vacuum can be formed on that side of the small piston.

The main-valve chamber is always in communication with the reversing-valve chamber by a small port in the bushing, 75, as shown in Sec. 2; cap nut 74 has a small port in it which allows live steam to always reach the top of the reversing-valve stem, for the purpose of keeping the pressure balanced on both ends of it.

As the main piston is now making its down-stroke the reversing plate, 69, engages the button on the end of the reversing-valve stem and draws the reversing valve down to the position shown in Sec. 2, which connects the second horizontal port in the bushing with the port which in Sec. 3 appears to be vertical and having a short extension to the right, and as this port

is always open to the main exhaust, the steam between piston 77 and the head 84 is exhausted, which allows the steam in the main-valve chamber to again force piston 77 to the position shown in Sec. 1, which places the slide valve in position to allow the steam to exhaust from the top of the main piston, and at the same time connects the main-valve chamber with the under side of the main piston, causing it to be forced up, as before.

Like the 8-inch pump, the stuffing boxes, 95, must be kept well packed, and the gland nuts, 96, just tight enough to stop leaks, but not tight enough to cause groaning. With metallic packing the nuts can be tightened more than they could if a fiber packing is used, for if you screw down too tight on a fiber packing it will ruin it.

The drain cock, 105, must be handled in the same way as the one on the 8-inch pump, but in addition to this one there is one in the main exhaust (not shown in Sec. 1), and it also must be opened when starting the pump.

The 11-Inch Pump. The Westinghouse Air Brake Company are now making an 11-inch pump after the same pattern as the 9½-inch one.

As the 9½-inch pump can compress about a third more air in a given time than the 8-inch pump, in like manner the 11-inch pump can compress a third more air than the 9½-inch pump can within the same length of time.

Right and left hand pumps are pumps having two sets of plugs on either side of the steam cylinder, so that the pump can be located on either side of the engine as desired. All 9½-inch and 11-inch pumps are now made right and left.

To change a pump from right to left, or vice versa,

remove the steam port fittings and opposite plug and exchange them, remove the exhaust port fitting and its opposite plug and exchange them.

Lubrication of Air Pumps. In oiling either the 8, 9½ or 11-inch pump the steam end is oiled by a lubricator, and when first starting the pump, the oil should be allowed to flow at the rate of about fifteen drops a minute, but as soon as the pump is nicely warmed up, or say about thirty pounds pressure in the main reservoir, then the oil should be cut down to about one drop a minute, if that will keep the pump lubricated so that it won't groan. Some pumps require more oil than others, according to the work they have to do. Too much oil in either end of the pump is ruinous.

The air cylinder should be oiled regularly with good valve oil, as the old practice of oiling it only when the pump groans is now found to be bad practice. A good fat swab should always be kept on the piston-rod, and kept well oiled, which will help keep the air cylinder lubricated.

Under no circumstances must oil be sucked in through the air inlet, as it will surely ruin the pump. Whenever the air cylinder is to be oiled, the pump should be throttled down to a very slow speed, and after first filling the oil cup, watch the stroke of the piston, and, while it is going down, quickly open the oil cup and allow the oil to be sucked in before the piston starts up. This causes the oil to be sprayed around the cylinder. If oil was poured in while the pump was cold, just as soon as it was started up the oil would be forced into the main reservoir, and eventually find its way to the brake valve, and gum up the rotary, feed valve and pump governor.

Some engineers say they can't oil a pump on the

down-stroke for the reason that the oil blows back in their face; this is true only when the piston packing rings are leaky, and if the oil does blow back on the down-stroke, it tells you very plainly that new packing rings are needed, and needed badly, as one of the most common causes for the pump running hot is leaky packing rings. A leaky discharge valve might cause a back blow, but if the pump is completely stopped and you hold your finger slightly above the open oil cup you can tell if the trouble is there.

There is now being supplied, when so specified, an automatic oil cup for the air end of the pump, on both the Westinghouse and the New York air pumps.

Never use anything but good valve oil for either end of the pump, as the heat generated by the compression of air is so great that it requires oil of a high flashing point to withstand it. On a warm summer's day the air in a pump working against a ninety-pound pressure in the main reservoir is about 550 degrees, and on a cold winter's day, when the thermometer is thirty degrees below freezing, the pump generates a heat of 300 degrees against a ninety-pound main-reservoir pressure. And if you run your pump faster than sixty or seventy full strokes a minute, or have leaky packing rings or leaky discharge valves, the heat is raised considerably higher.

The air valves in the 9½-inch pump operate the same as in the 8-inch. But the lift of the air valves in the 9½-inch pump are all the same, whereas they differ in the 8-inch pump, as previously explained.

The Pump Governor. When an engine is equipped with a brake valve on which there is a feed valve attachment, the pump governor controls the main-reservoir pressure.

But when the D-8 brake valve is used, the **governor** controls the train-pipe pressure.

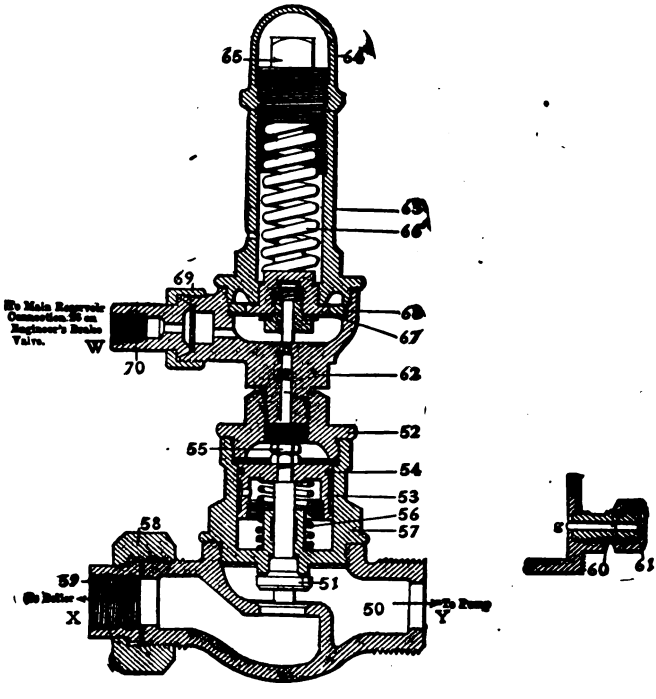

FIGURE 226
PUMP GOVERNOR

While the new style governor is very similar to the old style, the new one is much more reliable, as it is more positive in its action.

The governor is located on the steam pipe leading to the pump, as its purpose is to shut off the steam whenever the pump has compressed the required

amount of air; and whenever the air pressure falls below standard, the governor automatically reopens the valve in the steam pipe and keeps it open until the air pressure is again restored, when it again shuts off the steam.

This action is very simple. As the steam enters the governor at *x*, it passes under the steam valve, 51, and through Y into the pump, and as long as the steam valve is unseated the pump will continue to work and compress air right up to boiler pressure; but as ninety pounds is all that is wanted in the main reservoir with the regular quick-action equipment, the tension spring of the governor must be set so that the steam valve will seat when ninety pounds is reached.

This is done as follows: It will be noticed that piston 53 rests on the stem of the steam valve, and that the area of piston 53 is several times greater than the area of the steam valve, which means that if the relative areas were as three is to one, that when a fraction over fifty pounds of air got on top of piston 53 it would drive the steam valve to its seat against a steam pressure of 150 pounds.

The manner in which the air is admitted to the top of piston 53 to stop the pump, or kept from it to allow the pump to run, is as follows: A small pipe leading from the main-reservoir return pipe is connected to the governor at W, which allows main-reservoir pressure to always fill the chamber under diaphragm 67, and as this diaphragm is held down by a tension spring 66, and as there is a small pin valve attached to the center of the diaphragm which closes the port leading to the top of piston 53, whenever the air pressure becomes greater under the diaphragm than the tension of the spring, it will cause it to raise and unseat the

pin valve, and allow the air to reach the top of piston 53, causing it to seat the steam valve and stop the pump. If the tension spring 66 is properly set the pump will stop when there is 90 pounds in the main-reservoir. Whenever the main-reservoir pressure gets lower than the tension of the spring, the diaphragm valve drops back to its seat and the air escapes frow the top of piston 53 through a small vent port 52, which allows spring 56 to aid the steam in lifting the steam valve from its seat.

If the vent port 62 is not kept open the pump will be slow in starting, for the air could only get off the top of piston 53 by passing down around packing ring 54 and out at the waste-pipe connection (*g*); stud 60 is tapped in the back of the governor under piston 53, to carry off any steam that might leak by the stem of valve 51, or any air that might leak around packing ring 54, consequently should both the vent port and the waste pipe become clogged the governor would not shut off the pump, and the main-reservoir pressure would run up to boiler pressure.

Engineer's Brake Valve

In applying the brakes with the quick-action triple, it is not only necessary to reduce the train-pipe pressure lower than that in the auxiliary, but it is absolutely necessary that the reduction be made *gradually* to prevent the emergency action.

The old-style brake valve, or three-way cock, had only three positions, viz: application, lap and release, and while some men seem to think the new brake valve has only two positions, "on" and "off," there are, however, five positions, as follows: full release,

running position, lap, service application, and emergency.

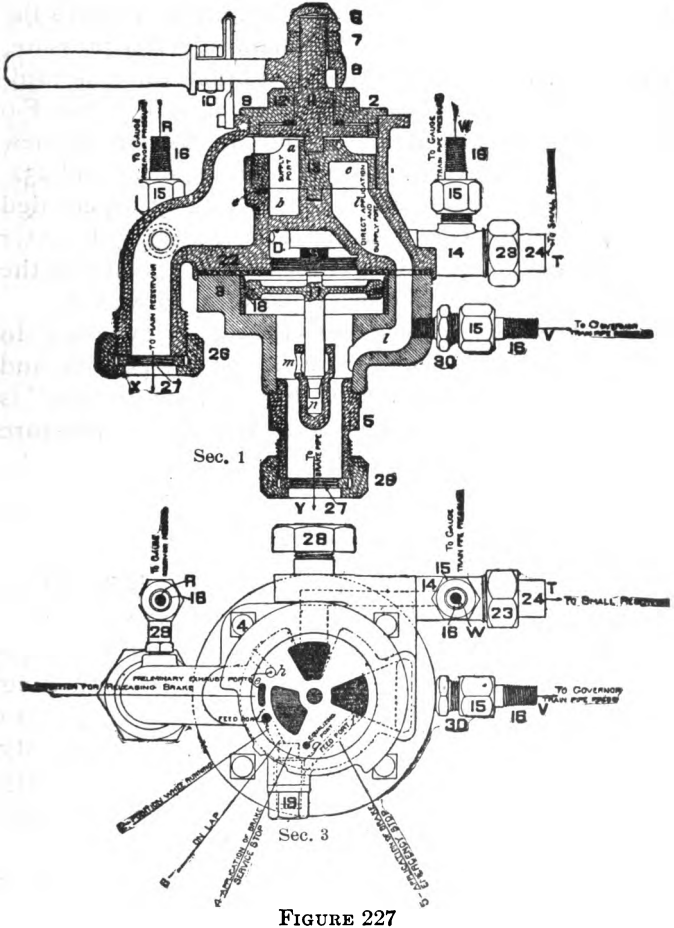

FIGURE 227

D-8 BRAKE VALVE AND ROTARY SEAT

There are two kinds of brake valves, one has no feed valve attachmen and is known as the D-8 and depends

upon the pump governor to regulate the trainpipe pressure. The other kind has a feed-valve attachment for controlling the trainpipe pressure, which leaves the pump governor to control the main-reservoir pressure, and is known as the F-6 and G-6 brake valve, according to the kind of feed valve there is on it. The F-6 has the old style feed valve, and the G-6 has the new slide valve feed valve, as shown in Figs. 231 and 232.

As the D-8 brake valve is now largely superseded by the F-6 and G-6 it will not be necessary to enter into details in describing it, except to point out the differences between the two types of brake valves.

The D-8 brake valve uses the pump governor to control the trainpipe pressure of seventy pounds, and the connection is made at V, Fig. 227, the "excess" is controlled by what is known as the excess pressure valve (19, Sec. 3, of Fig. 227).

The D-8 Engineer's Brake Valve

When the handle of the D-8 brake valve is in full release position the pump will shut off at seventy pounds and the pressure in the main-reservoir and trainpipe would be the same, but if the handle is in running position the excess pressure valve will not open to admit air into the trainpipe until there is twenty pounds in the main reservoir, and as it requires twenty pounds to hold this valve open, the trainpipe will get a pressure of seventy pounds before the pump will shut off, thus leaving an excess pressure of twenty pounds in the main reservoir.

If the handle is placed on lap while the trainpipe pressure is below seventy pounds, the pump will run the main reservoir pressure up to boiler pressure, for

the governor cannot shut the pump off unless there is seventy pounds in the trainpipe; on the other hand, if the handle is in running position no air can get into the trainpipe until there is twenty pounds of excess in the main reservoir, and as a consequence the many leaks that commonly occur in the main reservoir and trainpipe connections cause the brakes to creep on before the pressure can be restored to keep them off. It is mainly on this account that the F-6 brake valve was invented, for with this valve the pump governor is controlled by the main reservoir pressure, and will stop the pump at ninety pounds in the main reservoir, no matter in what position the handle is, and, as the trainpipe pressure is controlled by the feed valve, whenever that pressure falls below the standard of seventy pounds, if the handle is in running

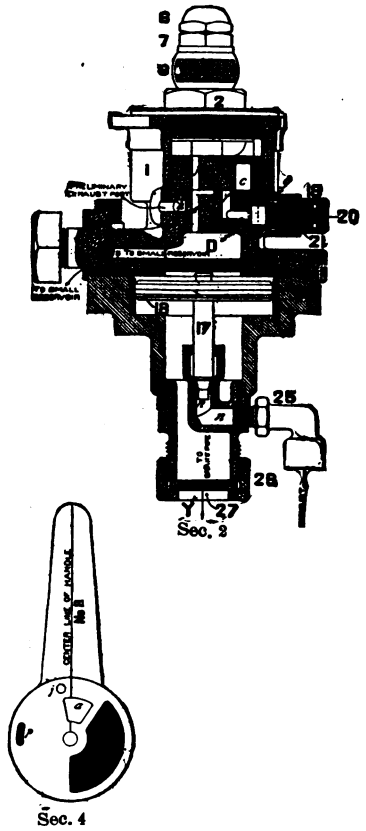

FIGURE 228

D-8 BRAKE VALVE AND ROTARY

position the feed valve will open and let the main reservoir pressure in, and thus keep the brakes from dragging.

Another difference between the two kinds of brake valves is that with the D-8 valve, when making a service application, the air from cavity D over the equalizing discharge valve (17) is exhausted to the atmosphere through a separate little port in the casing, marked *h* in Sec. 2 of Fig. 228, whereas the preliminary exhaust *h*, in the F-6 valve, is connected with the main or emergency exhaust, marked *k* in Sec. 2 of Fig. 230, thus making one port less through the casing of the F-6 brake valve.

Therefore there are the following differences between the D-8 and the F-6 brake valves: 1st, with the D-8 valve the excess pressure is gotten *before* the trainpipe begins to charge, if the handle is in running position; 2nd, with the D-8 valve the trainpipe pressure is controlled by the pump governor, instead of the feed valve attachment, as it is with the F-6; 3rd, with the D-8 valve, if the handle is left in either lap, service or emergency position, the pump will run the main reservoir pressure up to boiler pressure, or will shut off when there is only seventy pounds in the main reservoir if the handle is left in full release from the starting of the pump, whereas with the F-6 valve, the pump will be shut off by the governor, if properly set, when the main reservoir reaches ninety pounds, no matter what position the handle of the valve is in; 4th, with the F-6 valve the excess pressure is gotten *after* the trainpipe pressure is pumped up; 5th, with the D-8 valve, if the excess pressure valve should happen to be in bad order, and it usually is, if the handle was left on lap for any considerable length

of time after making a service application, the main reservoir pressure would be raised so high that, with a short train, when the handle was thrown to release position the auxiliaries would be overcharged, and the wheels slid on the next application, unless the engineer was very careful, whereas with the F-6 valve the most that could get in the auxiliaries, if the governor was correct, would be ninety pounds; 6th, when an emergency application is made with the D-8 valve, the black hand on the gauge will rise instead of fall, because in this position the equalizing port to cavity D is open to the main reservoir pressure. The construction of the D-8 valve, with these differences, is the same as the F-6 or G-6, except that the D-8 has an excess pressure valve while the F-6 or G-6 has a feed valve attachment, which will be explained in regular order.

The F 6 (1892 Model) Engineer's Brake Valve

The engineer's brake valve is the device on the engine by means of which the engineer is enabled to charge up, and keep charged, the trainpipe and auxiliaries; apply the brakes, and keep them applied, release the brakes and keep them released, and to do these several things he has either to place the main reservoir in communication with the trainpipe, or open the trainpipe to the atmosphere, or shut off all communication, as the case may be, according to whether he is applying or releasing the brakes, keeping them set, or running along.

There are just four things that constitute the essential parts to a modern brake valve, and they are: the rotary valve, the handle that controls the rotary, the

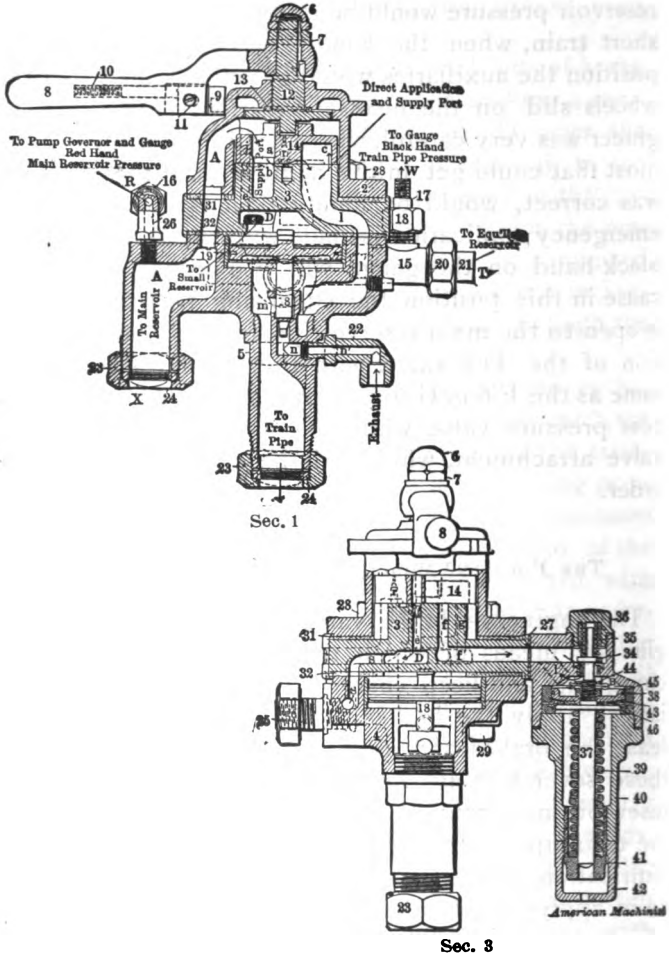

FIGURE 229

F-6 BRAKE VALVE AND OLD STYLE FEED VALVE

equalizing discharge valve, and the feed valve attachment, or trainpipe governor. Of course there are gaskets, springs, packing rings, the equalizing reservoir, etc., but they are matters of detail.

There are five positions in which the handle of the brake valve can be placed.

The first, or extreme left position is "full release," and is the position the handle should always be in when releasing brakes, or when it becomes necessary to charge up quickly, for in this position the air from the main reservoir flows through the largest ports in the rotary, direct to the trainpipe.

The second position is called "running position," because the handle should be carried in this position while running along, for the reason that in this position the rotary valve is placed so that all the air that passes from the main reservoir into the trainpipe must go through the feed valve attachment, and this attachment will only allow seventy pounds of air to get into the trainpipe (if set correctly, and unless the high-speed apparatus is being used), it enables the pump to maintain an excess pressure in the main reservoir, for if the pump governor is set at ninety pounds, and the feed valve set at seventy, there will naturally be twenty pounds greater pressure in the main reservoir than in the trainpipe before the pump is stopped by the governor.

Another reason why the handle must always be carried in running position while the train is running along, is because whenever the pressure in the trainpipe leaks down below the standard of seventy pounds, the feed valve will open automatically and allow the main reservoir pressure to again flow into the trainpipe until that pressure is restored, when it

will automatically close itself, and allow the pump to again create the "excess" in the main reservoir.

The third position on the brake valve is "lap," and when the handle is in this position all ports are closed, so that no air can pass either into the trainpipe or out of it. After applying the brakes, the handle should be brought to lap carefully, and held there until it is desired to further reduce the trainpipe pressure or release the brakes, as the case may be, and when releasing the brakes the handle must be placed on full release position for a few seconds, according to the length of train and the amount of excess carried before it is allowed to rest on running position.

The fourth position is called "service application position," because in this position the air is allowed to escape gradually from the trainpipe. In this position the air on top of the equalizing discharge valve is allowed to escape through the small preliminary exhaust port in the seat of the rotary so gradually that a sudden reduction on the trainpipe is prevented, for as the pressure on top of the discharge valve is allowed to escape, the trainpipe pressure below gradually forces it from its seat and thereby opens the trainpipe exhaust. If the handle is left in service position until ten pounds is drawn from the top of the discharge valve and then placed on the lap, the valve will not seat until a fraction over ten pounds has escaped from the trainpipe, when the pressure on top will then be the greatest and force the discharge valve back to its seat, and thereby close the trainpipe exhaust.

The fifth position is called "emergency application position," because when the handle is in this position the rotary connects the main trainpipe supply port with the main exhaust port and the air is allowed to

escape from the trainpipe, direct to the atmosphere, regardless of the equalizing discharge valve, and this sudden reduction of trainpipe pressure allows the triples to be forced to their full stroke, and thus causes the quick action, or emergency application. Emergency position should never be used except in case of danger. Owing to the rough manner in which some enginemen handle their brakes, this position is often called "criminal application position."

The parts of the F-6 brake valve are as follows: the handle, which controls the rotary, is marked 8, in Sec. 1; the lug (9) is forced out by a spring (10) so that the handle may be stopped in any desired position, and when placing the handle in any of the positions be sure that the lug in the handle is right up against the lug on the brake valve, for the reason that the rotary valve is moved in exact accord with the handle. If either lug is worn the movement of the rotary will be correspondingly changed when the lugs are against each other; 12 is the stem to one end of which the handle is fastened by nuts 6 and 7, and the other is dove-tailed or keyed into the top of the rotary, so that whatever way the handle is turned the rotary has to turn with it; 13 is a small leather gasket for the purpose of preventing any air from leaking out around the stem, as main reservoir pressure is always on top of the rotary and under the shoulder of stem 12, forcing it up against the casing. This gasket sometimes gets gummed up so badly that it causes the handle to move very hard; 14 is the rotary valve, and 3 is the rotary valve seat; 18 is the equalizing discharge valve, which controls the trainpipe exhaust *m* and *n*. The action of the discharge valve has already been explained under "service application position."

As cavity D above the discharge valve is very small, it is necessary to have a greater volume of air to control it than the cavity alone will contain, and this greater volume is supplied by a little drum, or equalizing reservoir, which holds about 500 cubic inches of air, and is located, usually, under the footboard of the cab. It is connected to the brake valve at T (Sec. 1), and from T to cavity D there is a connecting passage, as shown by *s* in Secs. 2 and 3, and as the little drum is always charged equally with cavity D, whenever the pressure in cavity D is reduced it is also reduced in the little drum. This greater volume is needed above the discharge valve to compensate for the volume in the trainpipe.

When the handle of the brake valve is placed in service position the rotary shuts off the main reservoir and also cavity D from the trainpipe, and allows the air to escape from cavity D by way of port *e*, groove *p* and preliminary exhaust port *h* to the atmosphere through the main exhaust *k*, and when the handle is moved to lap it closes the preliminary exhaust, and thus holds the little drum pressure at whatever it was reduced to, as shown by the black hand of the gauge, and when the trainpipe has exhausted until it becomes less than the pressure in cavity D the discharge valve is forced to its seat by the pressure in the little drum, and stops any further flow of air from the trainpipe.

Nos. 34 to 46 in Sec. 3 of Fig. 229, all refer to the old style feed valve attachment as used on the F-6 brake valve. The essential parts are the supply valve 34, valve spring 35, diaphragm piston 37, regulating spring 39, regulating nut 41.

When the rotary is in running position the operation

or the feed valve is as follows: The regulating spring being set at seventy pounds tension, it forces the piston up against the stem of the supply valve and raises it off its seat, causing the main reservoir pressure to flow from the top of the rotary down through port *j* in the rotary (Sec. 4, Fig. 230), and through port *f* in the rotary seat (Sec. 3, Fig. 229), through a passage (*t*), and under the supply valve to the top of the diaphragm piston, then through a port (shown by dotted lines, and marked *i*, Sec. 2, Fig. 230), which leads off the top of the piston into the trainpipe by way of the main supply port as shown by dotted lines in Sec. 2. As the rotary is now in position so that the large cavity (*c*) as shown in Sec. 4, Fig. 230, connects the main supply port with the equalizing port *g* (which passes

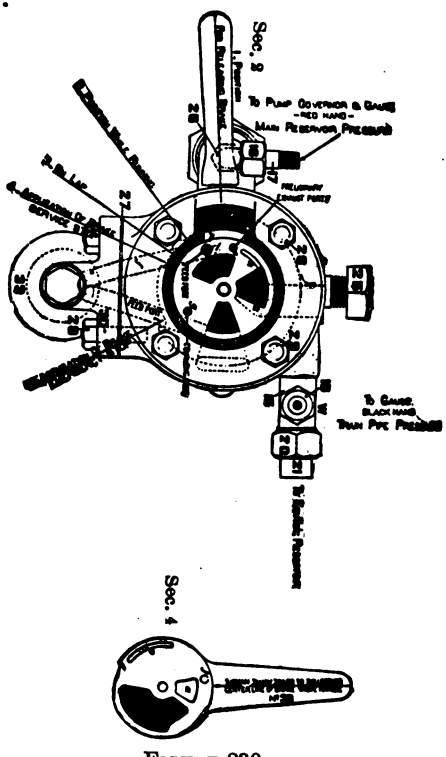

FIGURE 230
F-6 BRAKE VALVE—ROTARY AND SEAT

through the rotary seat into cavity D), the air that is passing from the top of the rotary through the feed valve into the trainpipe, is also filling cavity D, and the little drum, by way of ports *g* and *s*, as shown in Sec. 3, Fig. 229. While Fig. 229 shows full release position, still ports *s* and *g* are fully shown, and if the handle is moved to running position the port through the rotary that registers with port *e* in Sec. 3, would be in register with port *f*; port *g* is indicated by dotted lines.

In running position, when the trainpipe and little drum are charged up to seventy pounds there is also seventy pounds on top of the diaphragm piston, and as the regulating spring is set at a fraction less than seventy, the air pressure forces it down and allows the supply valve to seat and shut off the main reservoir from the trainpipe. But as soon as the pressure in the trainpipe falls below seventy, the piston is again forced up by the regulating spring and keeps the supply valve open until the pressure is again restored in the trainpipe.

The feed valve attachment is in operation only when the handle of the brake valve is in running position.

The course of the air through the brake valve in full release position is as follows: The return pipe from the main reservoir is connected to the brake valve at X, and passes directly to the top of the rotary through the passage A, then through port *a* in the rotary into cavity *b* in the rotary seat and under a bridge in the rotary (which now stands midway over cavity *b*), and on over the seat of the rotary, through large cavity *c*, direct into the main supply port (1) to the trainpipe. In passing over the rotary seat the air also passes down through the equalizing port *g*, into cavity D,

and from cavity D through port *s* into the little drum; and as the feed valve is cut out when the handle is in full release, both the little drum and trainpipe pressure would charge up to main reservoir pressure if the rotary was left in full release. In full release position, port *j* in the rotary registers with port *e* in the seat, so that cavity D charges faster in full release than in running position.

Always remember that the little drum is simply an enlargement of cavity D, and the same pressure is in both.

The *Warning Port*, through which the air is heard escaping as long as the handle remains in full release, is a small port through the rotary about the size of a pin, which allows the main reservoir air to whistle through it to warn the engineer that he is liable to overcharge his trainpipe. It should always be kept clean.

The black hand of the gauge is piped to the little drum at W (Sec. 1, Fig. 229), as stud 17 is tapped into pipe 15 which connects the little drum with cavity D by way of port *s*.

The red hand of the gauge and also the pump governor are piped to the main reservoir pressure at R.

To make an emergency application the handle must be moved to the extreme right, when the large cavity (*c*) in the rotary will connect the main supply port (*l*) of the trainpipe with the main exhaust port (*k*), and allow the air in the trainpipe to exhaust directly into the atmosphere.

BRAKE VALVE AND NEW SLIDE VALVE FEED VALVE

The G-6 brake valve is identical with the F-6, with

the exception of the feed valve. In the new slide valve feed valve the only material change is that a slide valve controls the flow of air from the main reservoir into the trainpipe, which allows the pressure

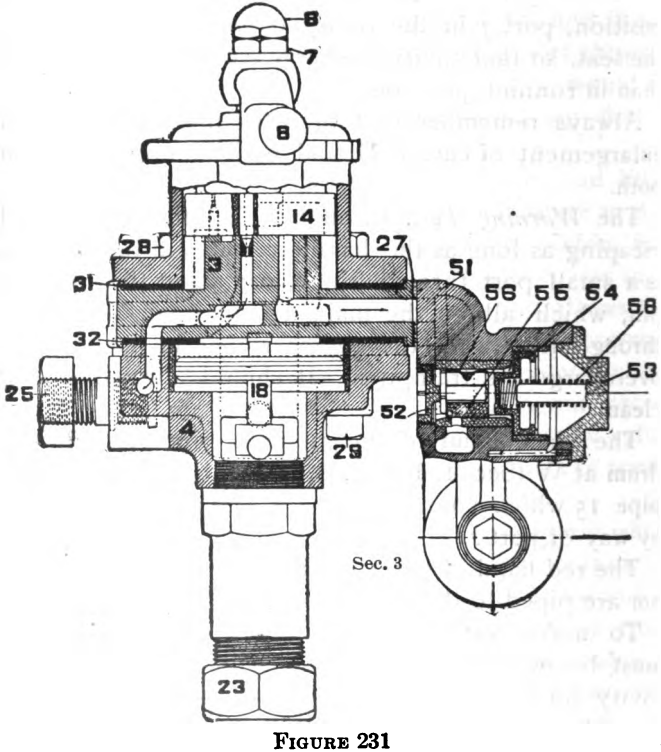

FIGURE 231
G-6 BRAKE VALVE

to be raised much quicker than it can be with the old style feed valve.

The working parts of the new slide valve feed valve are as follows: all of the essential parts of the old

style feed valve are retained, see Fig. 232, with slight modification, for 64 is the diaphragm piston, which, instead of having a rubber diaphragm has two sheet-brass diaphragms (57) on the piston head, supported by a ring (63); 67 is the regulating spring; 65 the regulating nut; 59 a small valve corresponding exactly with supply valve 34 in the old style feed valve and 60 is the spring which controls valve 59.

By reference to Fig. 231, Sec. 3, it will be seen that there is a slide valve (55) attached to a piston (54), and this piston is forced forward by a spring (58).

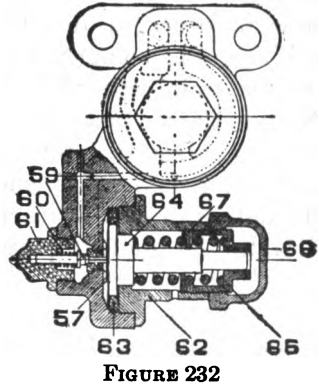

FIGURE 232
SLIDE VALVE FEED VALVE

The action of the new slide valve feed valve is as follows: When the handle of the rotary is in running position, main reservoir pressure drives the slide valve and piston back, which uncovers a port in the slide valve seat that connects with feed port *i*, and as the slide valve does not move until the train-pipe is fully charged, it causes the pressure to be restored very quickly after it has been reduced from any cause.

The reason the slide valve does not move until the pressure is restored is because the piston has no packing rings, and the air is allowed to circulate by it through a small passage that leads to the supply valve chamber, from which it passes under the cut-off valve across the diaphragm into feed port *i*, and when there is a pressure of seventy pounds on the diaphragm it

moves away from the supply valve and allows it to seat, when the circulation by the piston is stopped, causing the pressure to equalize on both sides of the slide valve piston, when spring 58 moves the slide valve and closes communication between the main reservoir and the trainpipe. Whenever trainpipe pressure falls below seventy the diaphragm forces valve 59 off its seat and the same action is repeated as before.

The Triple Valve. Having studied the construction and operation of the air pump at some length it is now in order to devote a space to the method of utilizing the compressed air in the setting of brakes on the train, according to the Westinghouse system. Next to the air pumpthe triple valve is one of the most important factors in the automatic air brake equipment and engineers and firemen should thoroughly master the details of its construction and action.

Naturally the first question arises: "Why must there be a triple valve?"

It is because the brake charges, sets and releases automatically, and as this requires three distinct services, it follows that a device capable of doing a triple service must be had, and as these three things are done by one part of the equipment it is called the triple valve (meaning three valves in one, or a valve that charges the auxiliary reservoir, a valve that sets the brakes and a valve that releases the brakes).

In order to clearly understand the duties and action of the triple valve remember that on each car there must be a trainpipe, an auxiliary reservoir, a brake cylinder and the triple valve. There are several kinds of triple valves in use, but the same principle governs their action. The operation of the "plain" triple

valve in making a full service application of the brakes, releasing the brakes, and recharging the auxiliary reservoir will be first described and illustrated. It should be remembered that in order to set the brakes, the pressure in the trainpipe must be reduced to a lower point than the pressure in the auxiliary reservoir, otherwise the triple will not move and open the port between the auxiliary and the brake cylinder.

The Parts of the Plain Triple Valve consist of only six things, besides the casing which holds them all, and are shown in Fig. 233 (which shows the way the new plain triple now used for driver brakes would look if it was cut in half), and they are designated as follows: 23 is called the triple piston; 24 is the slide valve; 25 is the graduating valve; 26 is the graduating stem, and 27 is the graduating spring; 32 is the U spring over the slide valve.

The casing is so shaped that one part of it forms a cylinder for the triple piston to move in, and is marked B, and adjoining it is a chamber having a flat side (called the slide valve seat), for the slide valve to slide on, and is marked C.

The flat side of this chamber, which forms the seat on which the slide valve rests, has two ports cut through it; the one marked *f* leads to the brake cylinder, and the other, marked *h*, leads to the atmosphere.

In the slide valve there are also two ports; one passes clear through the valve, as shown by the letters *l*, *p-p*, and the other is a groove cut in the bottom of the valve, and marked *g*, and when the valve is moved toward the left end of chamber C (in other words, moves down), the port through the valve

marked *p* connects with the port in the seat marked *f*, so that the air in the auxiliary can pass through the

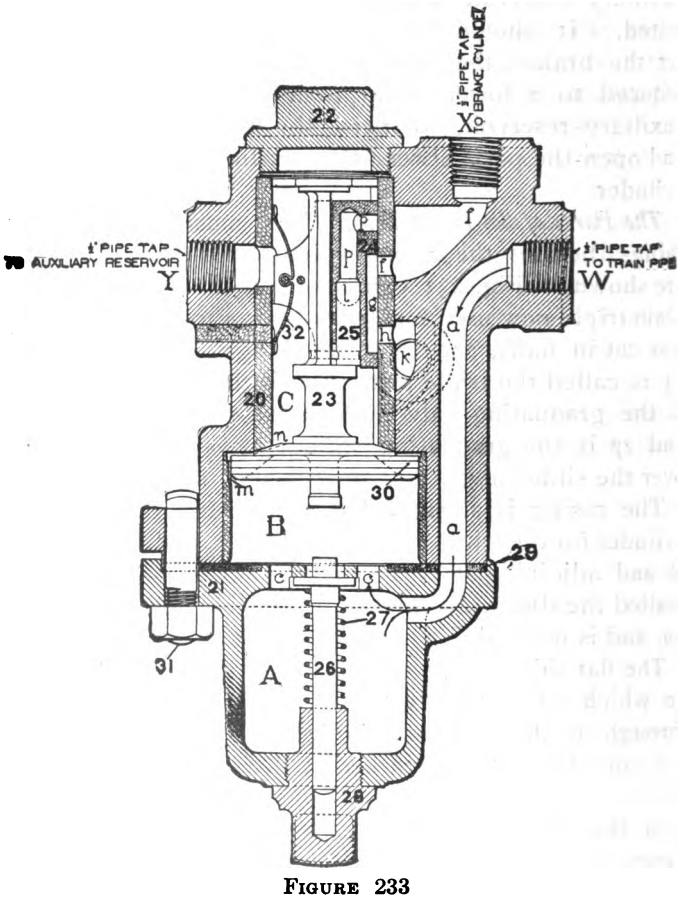

FIGURE 233

NEW STYLE PLAIN TRIPLE VALVE

valve and valve seat and on through pipe connection X directly into the brake cylinder; and when the slide

valve is in the opposite end of chamber C the groove *g* in the bottom of the slide valve connects the two ports *f* and *h* together, so that one end of the groove rests directly over the port leading to the brake cylinder, and the other end rests over the port leading to the atmosphere, thus forming a direct opening between the brake cylinder and the atmosphere; therefore, as the triple is so connected to the auxiliary by pipe connection Y that the auxiliary pressure is always in direct communication with chamber C, in which the slide valve moves, and as the port in the seat marked *f* is the only way for the air to get in or out of the brake cylinder, with this kind of a triple, it is very evident that when the slide valve is moved along on its seat until the port in the valve marked *p-p* comes opposite the port in the seat marked *f*, the air in the auxiliary is free to pass into the brake cylinder, and set the brake. And when the slide valve is forced back again to its original position, as shown in Fig. 233, the air in the brake cylinder is free to pass out to the atmosphere through ports *f*, *g*, *h* and exhaust port *k*, and thereby release the brakes. Therefore, as the flow of air from the auxiliary to the brake cylinder, and from the brake cylinder to the atmosphere is dependent upon the movement of the slide valve, it is very necessary to understand how this movement is accomplished.

The stem of the triple piston extends into chamber C in which the slide valve moves, and the valve is hung on this stem; there is a packing ring (30) around the triple piston, making a tight joint against the walls of cylinder B, and as one end of this cylinder is always open to chamber C (which always contains auxiliary pressure), and the other end of cylinder B is al-

ways open to the trainpipe, it will be seen at once that the triple piston stands between the auxiliary and trainpipe pressure at all times, and if these pressures are equal, and the piston is in full release position, as shown in Fig. 233, should the pressure on the trainpipe side of the piston become lower than that on the slide valve side, the piston would be moved by the auxiliary pressure, and of course draw the slide valve with it, causing the port in the valve marked *p* to come opposite the port in the seat marked *f*, and allow the air from the auxiliary to pass into the brake cylinder and set the brake.

Now that the air is in the brake cylinder, the next point to learn is how to release the brake.

To Release the Brake it is necessary to force the slide valve back to the position it occupied before the brake was set, as shown in Fig. 233.

To do this the pressure stored in the main reservoir, on the engine is used, for when the engineer places his brake valve in full release position the main reservoir pressure quickly raises the pressure on the trainpipe side of the triple piston and forces it back to the position shown in Fig. 233, and, as the slide valve has to go back with it, the groove *g* in the bottom of the valve is placed so that one end of it rests over the port marked *f* in the valve seat, and the other end rests over the port marked *h* in the valve seat, consequently the air in the brake cylinder is free to pass out to the atmosphere through ports *f*, *g*, *h* and through a passage around the casing to the triple exhaust marked *k*. The air having thus escaped from the brake cylinder the heavy spring in the cylinder, marked 9, in Fig. 238, drives the brake piston back from the levers.

which allows the shoes to drop away from the wheels, and the brake is released.

The whistling noise heard when the brakes are releasing on passenger cars is caused by the air escaping through the small ports in the triple (on freight cars the air exhausts through the pressure-retaining valve on top of the car), and if this whistling is weak, when releasing after a full application has been made, it indicates that either a portion of the air has already escaped from the cylinder through a bad packing leather around the brake piston, or there is too much piston travel, which allowed the air to expand in the cylinder more than it should have done; in other words, a high pressure will rush out quicker than a low pressure, for, as you know, the faster wind blows the louder it whistles.

Recharging the Auxiliary. Having set the brakes and released them, it now becomes necessary to recharge the auxiliary reservoir, to be ready for the next application.

The brake cylinder gets its power from the auxiliary, and the latter must always be kept charged ready to meet all the demands made upon it by the cylinder. If the auxiliary is only part charged, the force with which the brakes set will be correspondingly weak.

Also remember that just as soon as the slide valve moves to let the air out of the brake cylinder the feed grooves between the trainpipe and auxiliary are opened to admit air again into the auxiliary.

Begin at the point indicated by W, Fig. 233 and follow the arrows; it will be seen that the air travels through a passage (*a-a*) in the casing, to a chamber indicated by A, and from this chamber there are two

openings (*c*, *c*,) which allow the air to pass into the cylinder in which the triple piston moves, as indicated by B. As the air passes from chamber A it strikes the plain side of the triple piston and forces it to the extreme end of cylinder B, and as the piston is supposed to be a tight fit in cylinder B, the only chance the air has to get into chamber C is by passing through a small groove cut in the wall of cylinder B, as indicated by *m*. This is called the "feed groove." As this groove *m* is only as long as the head of the piston is thick, the piston must be all the way back before the air can enter this groove; the piston only forms a seat about half way from its center to its outer edge, in other words, there is a shoulder on the slide valve side of the piston and this necessitates another groove to be cut in this shoulder, which is shown by the letter *n*. The air can now pass from cylinder B by way of the feed grooves, *m* and *n*, into chamber C, and over the top of the slide valve through the pipe connection Y into the auxiliary.

If the space to be filled by the pump is merely the main reservoir, the pump will stop when the main reservoir is charged to seventy pounds, provided the governor is set at seventy; but if the engineer places the handle of his brake valve in position so that the air in the main reservoir can flow direct into the trainpipe, it means that there is just that much more space to be filled before the pump will stop; then if the auxiliary is cut into the trainpipe by opening the cut-out cock on the cross-over pipe, it means that there is still more space for the air to flow into, and as the pump will not stop until there is seventy pounds in the main reservoir, and as the main reservoir cannot get its seventy pounds until the trainpipe has its

seventy pounds, and as the trainpipe cannot get its seventy pounds until the auxiliary gets its seventy pounds, it follows that the pump will continue to work until the auxiliary, trainpipe and main reservoir are all equally charged up to seventy pounds.

Owing to the smallness of the feed groove in the triple through which the air passes to get into the auxiliary, the trainpipe will naturally fill quicker than the auxiliary, and cause the pump to stop temporarily but as soon as the trainpipe pressure is again lowered by the air passing through the feed grooves into the auxiliary, the pump will again start, and continue to compress air until every bit of space is filled to seventy pounds.

If the main reservoir, trainpipe or auxiliary reservoir leaks, the pump will not stop at all, and a great many leaks will very soon wear a pump out. There are three things to remember in charging up a trainpipe after having made an application of the brake. First, leaks of any kind will prevent getting the required pressure in the time it should be gotten, and bad leaks will prevent it entirely. Second, the strainer and feed grooves in the triple, must be kept clean to allow the air to pass freely. Third, the packing ring around the triple piston must be a good fit to prevent the auxiliary charging too rapidly, and to insure against charging too quickly is the reason for having a shoulder on the slide valve side of the piston, for if any air leaks around the packing ring it cannot enter the auxiliary except through the second feed groove, as shown by *n* in plate 1, unless the shoulder on the piston has a bad seat.

A still greater reason for having the packing ring (30) tight, is to insure the brake against "sticking," as

it will if the trainpipe pressure equalizes with the auxiliary without moving the slide valve.

The reason for having the feed grooves so small in the triples is to allow all the auxiliaries on the train to charge as nearly together as possible, and also to assist in making the triple sensitive to the slightest reduction of trainpipe pressure, for, if the feed groove was large, when the air was drawn from the trainpipe a considerable amount of air from the auxiliary would flow back into the trainpipe before the piston moved; but, as it is, the feed groove is so small and so short that it requires less than a two pound reduction to cause the triple piston to move and shut off communication between the auxiliary and trainpipe.

For the same reason (sensitiveness) the piston packing ring must have a good fit, or else the auxiliary and trainpipe pressures will equalize, and thereby fail to move the piston when desired in setting or releasing the brakes. This is especially true on long trains.

If everything was tight, and all the parts working as they should, and trainpipe pressure was kept constantly at seventy pounds, a one-hundred car train could be charged as quickly as could one car, as under such perfect condition the air will pass through the feed grooves at the rate of one pound a second, but as this is never the case in actual practice, it will take about five minutes to charge up a short train of ten cars, and about twelve to fifteen minutes for a train of thirty or forty cars, with comparatively no trainpipe leaks, and where there are leaks it naturally takes much longer.

Thus far but one kind of application of the brakes has been considered, viz., a "full service application," but there are three kinds of application, each of

which will be explained in its proper place. There is, first, "the full service application"; second, "the partial service application"; and, third, "the emergency application." Besides the triple piston and slide valve, the functions of which have just been explained, there are four other parts pertaining to the plain triple valve, each one of which has its particular function to perform. Referring to Fig. 233, the graduating valve which works within the slide valve is marked 25, the graduating stem 26, and the graduating spring which surrounds it and holds it to its seat is marked 27, and the U spring marked 32.

The graduating valve makes it possible to make a partial service application, for without it the pressure in the auxiliary reservoir would be reduced much below that in the trainpipe, after a ten pound reduction, before the triple would lap itself; as there would be nothing to stop the flow of air from the auxiliary into the brake cylinder, until the auxiliary pressure becomes low enough for the trainpipe pressure to overcome the friction on the seat of the slide valve; but with the graduating valve in good condition, when a reduction of say ten pounds is made on the trainpipe, the triple will automatically lap itself as soon as a fraction over ten pounds has left the auxiliary.

This is done as follows: When the trainpipe pressure is reduced below that in the auxiliary the triple piston moves and carries with it the graduating valve, for, as will be seen by reference to Fig. 233, the graduating valve is connected directly to the stem of the triple piston by a small pin, as shown by the dotted lines, and, when the piston moves, the graduating valve is carried from its seat in the slide valve and opens port p, so that when the slide valve is in

service position the auxiliary air can pass through the slide valve by way of ports *l* and *p*, then through port *f* in the seat of the slide valve and on through pipe connection X direct into the brake cylinder; as only ten pounds was drawn from the trainpipe, just as soon as a fraction over ten pounds flows from the auxiliary, the trainpipe pressure being now the strongest forces the triple piston towards the auxiliary end of its cylinder, but it can only force it a very short distance, for the reason that the distance between the end of the slide valve and the shoulder on the stem of the piston is only three-sixteenths of an inch, and when the piston has moved this distance it is stopped by the slide valve, because the auxiliary pressure, aided by the U spring, is firmly holding the slide valve, on account of the friction being greater on the slide valve seat than it is around the edge of the triple piston, and when the piston is thus stopped by the slide valve, the graduating valve is now back on its seat, and no more air can flow from the auxiliary into the brake cylinder, until the trainpipe pressure is again reduced and the graduating valve again unseated by the movement of the triple piston.

The slide valve does not move when the second reduction is made, but stands in the same position as it assumed on the first reduction. Consequently, as soon as the graduating valve is unseated the air will again flow into the brake cylinder; but when the air in the brake cylinder finally becomes as strong as it is in the auxiliary (or equalizes), the pressure in the auxiliary no longer falls below that in the trainpipe and therefore the graduating valve remains off its seat, because the triple piston does not now move back as it did when the first reduction was made, as

the pressure in the trainpipe is now as low or lower than it is in the auxiliary, and the brakes are now fully applied. It will thus be seen that a "full service application" may be made without the graduating valve, but that it is a necessity in making a "partial service application." If the engineer simply wants to slow his train up, but does not want to come to a full stop, he can draw off any amount of air from the trainpipe he desires, and when he laps his brake valve, the triple valve will, by means of the graduating valve, let a corresponding amount of air from the auxiliary into the brake cylinder and automatically lap ports *l-p-p* in the slide valve, but if the engineer should draw his trainpipe pressure down below the point at which the auxiliary and brake cylinder equalize, he would not only be wasting the trainpipe pressure, but would have trouble when it came time for him to release his brakes as will be explained later on.

The functions of the graduating stem and spring, are to aid in making an "emegency application." When this kind of application is made it is only in case of danger, and therefore it is desired that the air in the auxiliary should be passed into the brake cylinder as quickly as possible, and in order to do this it is necessary to have the entire slide valve clear the port in the seat through which the air has to pass.

In making ordinary stops this very quick action is not required, and in order to prevent the slide valve making the full stroke, there is a projection on the trainpipe side of the triple piston which strikes against the graduating stem (26), and as this stem is held to its seat by the graduating spring (27), the strength of this spring combined with the pressure in the trainpipe causes the triple piston to stop, and in

doing so the slide valve is held in such a position that port *p* is in register with port *f*, and of course the brakes are applied gradually.

But if the pressure in the trainpipe is reduced suddenly, the auxiliary pressure causes the triple piston to strike the graduating stem a hammer blow and overcomes the tension of the spring so that the slide valve entirely clears the port in the seat, and the auxiliary pressure immediately equalizes with the brake cylinder. (This refers to the plain triple. The emergency action of the quick-action triple will be described later on.)

The U spring (32) is placed over the slide valve for the reason that if the brake is applied and all the air is let out of the trainpipe, and the car cut off from the engine, the brake could not be "bled" off by the release valve on the auxiliary if the slide valve could not be lifted off its seat by the brake cylinder pressure, but as there is a slight lift to the slide valve for this purpose, the U spring is required to reseat the valve, so that when the auxiliary is again recharged no air can get under the slide valve and pass out to the atmosphere through port *h* in the valve seat.

If there is a great deal of oil on the slide valve seat it will prevent the slide valve from being forced up by brake cylinder pressure, when a single car is being "bled off," and the brake cannot be released at all until the air finally leaks out around the packing leather in the cylinder. In such a case the release signal is very handy.

So far, the "plain" triple valve only has been under consideration, but as all cars are now supposed to be equipped with the "quick-action triple valve," it is necessary to study its action also, and to note the

points of difference between the two types of triples, and what is gained by having the quick-action triple. When an engineer applies the brakes he has to draw the trainpipe pressure down by letting it escape to the atmosphere through a port in the brake valve, and as the triple pistons will not move until the trainpipe pressure is reduced below that in the auxiliary reservoirs, it naturaly follows that on a train, of say thirty cars, equipped with plain triples, the brakes on the head end will set before the ones on the rear end, for the reason that the air in the front end of the trainpipe has to get out of the way before the air in the rear end can escape, and whenever the pressure on the trainpipe side of any triple is reduced lower than the auxiliary side, that triple will move and set the brake at once, and the difference between the plain and the quick-action triple is that the trainpipe pressure can be reduced faster with a "quick-action" triple than it can with a plain one, and consequently the brakes on a long train can be applied more rapidly with "quick-action" triples. The difference, therefore, between the two kinds of valves, is that with the plain triple there is but one way of getting the trainpipe pressure away from the triple piston, and that is through the brake valve (the front door), but with the quick-action triple there is an extra outlet through which the trainpipe pressure can escape when an emergency application is made, and thus cause the brakes on the entire train to be applied in about two seconds. This extra outlet is called the "emergency valve," and is shown in Fig. 237.

The parts contained in the quick action triple which are not in the plain one, are shown in Figures 234, 235, 236 and 237, and are indicated as follows: The emer-

gency piston is marked 8; the guide for this piston, which also forms a seat for the emergency valve, is marked 9; the emergency valve is 10; the check valve spring is 12; the check valve is 15, and the gasket which separates chamber X from chamber Y is

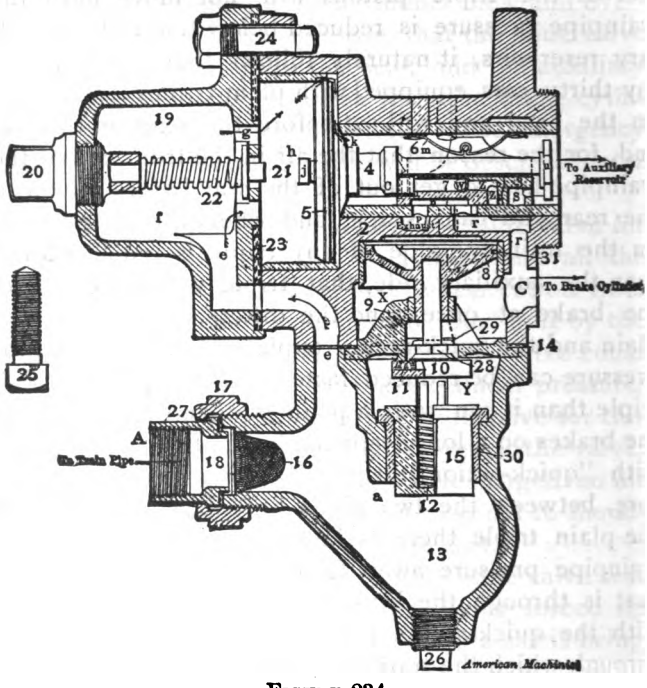

FIGURE 234

QUICK-ACTION TRIPLE IN RELEASE AND CHARGING POSITION

marked 14. This gasket extends clear across the triple, but a portion of it is cut away just over the emergency valve so that when that valve is unseated, as it is in an emergency application, the air in chamber Y can pass into chamber X and the brake cylinder, and

another hole is cut in this same gasket at *e*, so that the trainpipe pressure, which enters the triple at A, can pass freely into chambers *f* and *h*.

The quick-action triple has five positions: release, charging, service, lap and emergency.

Release and charging positions are in fact one and the same, as shown in Fig. 234. While the air is being released from the brake cylinder by way of the port in the slide valve seat, etc., as previously described and illustrated in Fig. 233, the auxiliary is being charged by way of the feed grooves marked *m* and *n* in Fig. 233, and *i* and *k* in Fig. 234, where a different set of numerals and letters is used, as for instance, the train pipe connection to the triple is marked A, while in Fig. 233 it is marked W.

By reference to the arrows in Fig. 234 it will be noted that after the air enters the triple at A, it passes through a passage in the casing, in the same manner as in Fig. 233 to a chamber having two openings into the cylinder containing the triple piston, and from this cylinder the air passes through the same two feed grooves that in Fig. 233 are marked *m* and *n*, but in Fig. 234 are designated by the letters *i* and *k*, on into the slide valve chamber, and instead of entering the auxiliary at the pipe connection at Y, as in Fig. 233, it passes on through the slide valve chamber into the auxiliary, so that no matter whether it is a plain or quick-action triple, the auxiliary pressure is always on the slide valve side of the triple piston, while the trainpipe pressure is on the opposite side. The difference, therefore, between the two kinds of triple valves is the emergency attachment which will be explained by reference to Fig. 235.

Emergency Position of Quick-action Triple Valve. A

sudden reduction of trainpipe pressure is necessary to cause the triple to assume the emergency position.

When a sudden reduction is made it causes the triple piston (4) to strike the graduating stem (21) such a hammer blow that the graduating spring (22) is unable

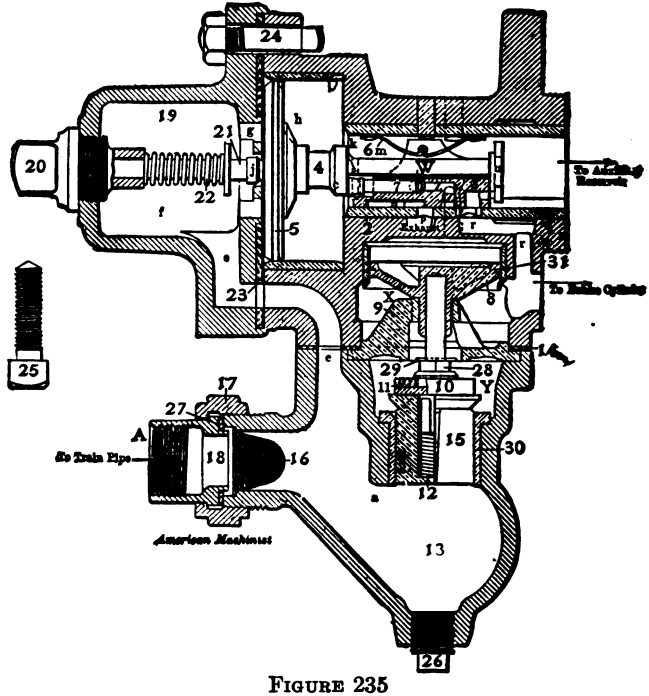

FIGURE 235

QUICK-ACTION TRIPLE IN EMERGENCY POSITION

to stop it from making its full stroke, and as it has now traveled further than it did in service position, the slide valve has also been moved a correspondingly greater distance on its seat, which brings a big slot, or in some triples, a removed corner (not shown) in the

slide valve over a port in the seat (indicated by dotted lines behind port Z), and allows the auxiliary pressure to fall on the emergency piston (8), which strikes the stem of valve 10 and forces it from its seat (which is kept closed by spring 12 and the trainpipe pressure in Y), and valve 10 being thus unseated, the air from Y rushes into the brake cylinder.

As all this is done so very quickly that the trainpipe pressure has as yet reduced but very little, the remaining trainpipe pressure forces the check valve up and also rushes into the brake cylinder until it equalizes what is left in the trainpipe, when spring 12 reseats the check valve, preventing the air in the brake cylinder from flowing back into the trainpipe.

At the same time that the big slot in the back of the slide valve reached its position over the port in the seat leading to the emergency piston, another small port in the slide valve, marked S in Fig. 234, is placed in register with port *r* in the valve seat, taking the place of port Z, which allows the auxiliary pressure to flow into the brake cylinder on top of what went in from the trainpipe.

The opening around the emergency valve is so much larger than the port *s* in the slide valve that virtually no air enters the brake cylinder from the auxiliary until the check valve closes on the charge received from the trainpipe.

It is this air from the trainpipe that gives the added twenty per cent brake power after an emergency application; for the air which enters the brake cylinder from the trainpipe has the same effect as shortening the piston travel, because it forces the auxiliary pressure to equalize just that much higher than it would

if the brake cylinder was empty when the auxiliary pressure started to flow into it.

On account of the trainpipe pressure having two outlets, (one by way of the brake valve, and the other by way of valve 10), when an emergency application is made, it is reduced so suddenly that the next triple is thrown into quick action, because the pressure that was holding that triple to release position immediately rushes back into the empty space just created in the trainpipe by the first reduction, and as it cannot be in both places at the same time, the triple is left without sufficient trainpipe pressure to hold it, when the pressure on the auxiliary side of that triple piston drives it to emergency position, which in turn creates a vacancy in the trainpipe on that car which the next car tries to fill, and so on, till all the brakes on the entire train are set in emergency, and it all happens so quick that the triples on a train of fifty cars can be thrown into quick action in about two seconds.

Fig. 236 illustrates the common form of plain triple, and before the advent of the quick-action triple, it was the standard for passenger cars. It is now mainly used on driver and tender brakes having cylinders of 10 inches, or less; but with larger cylinders the new plain triple, as shown in Fig. 233 is used.

The principal difference between these two kinds of plain triples is the arrangement of the cut-out cock.

In Fig. 236 the cut-out cock is attached right to the triple, and by turning the handle, which controls plug 13, the triple is caused to work "automatic" by placing it horizontal, and to cut it out place it at an angle of forty-five degrees; to make it work "straight air" place the handle perpendicular, for then plug 13 is turned so that the end of the passage which is shown

to be in register with port *d*, would then be in register with port *a*, and the other end of *e* would register with *d*, which would allow trainpipe pressure to flow direct into the brake cylinder through ports *a*, *e* and *d*;

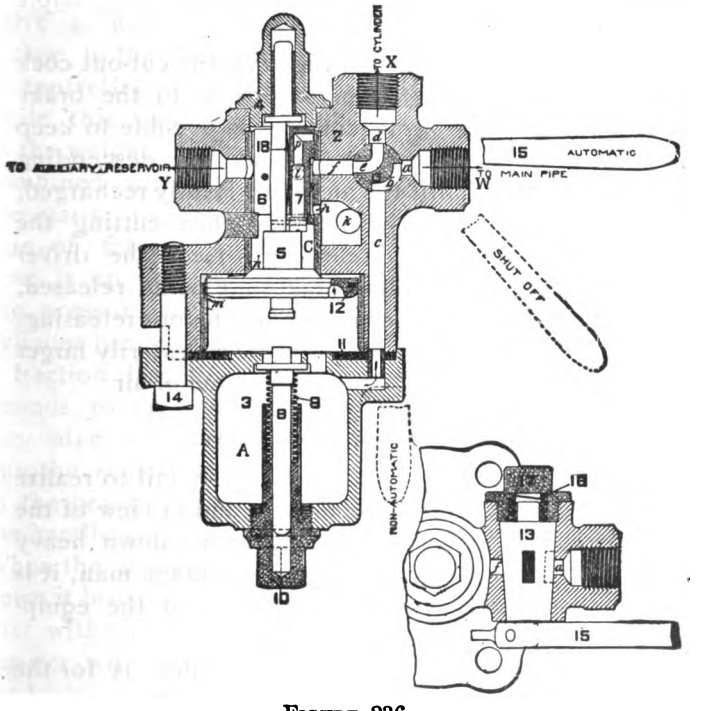

FIGURE 236

PLAIN TRIPLE OLD STYLE VALVE

in other words, the triple valve proper and auxiliary reservoir would not be used when the handle was turned on for "straight air." This is so seldom done nowadays that there is a lug cast in the handles of all such plain triples to prevent cutting them in straight air.

When it becomes necessary to bleed off a brake that is set with a plain triple drain the auxiliary before closing the cut-out cock, for, when cut out, the position of the passage is changed so that the air in the brake cylinder cannot escape through the triple exhaust.

With the new plain triple, Fig. 233, the cut-out cock is on the pipe leading from the triple to the brake cylinder. By this arrangement it is possible to keep the driver brakes temporarily set on descending mountain grades, until the auxiliary is fully recharged, by simply setting the brakes and then cutting the driver brakes out before releasing. Keep the driver brakes set while the train brakes are being released, by cutting out the driver brakes just before releasing.

In the new plain triple the ports are necessarily larger on account of handling a greater volume of air

Pressure-Retaining Valve

Many enginemen and trainmen utterly fail to realize the importance of this little device, and in view of the wonderful aid it is to handling trains down heavy grades, it is surprising that, by the average man, it is less understood than almost any part of the equipment.

A retaining valve, as the name implies, is for the purpose of retaining a certain amount of pressure in the brake cylinder after the triple valve has been moved to release position, and by reference to Fig. 237 its action will be readily understood. Into the triple exhaust a small pipe is attached and extends from the triple to the top of the car at the end where the hand-brake staff is, and onto this pipe is attached the retaining valve at the connection marked X. The

handle (5) controls a plug (6) similar to the cut-out plug (13) in the plain triple. When the handle is turned as you see it in plate 8, port *c* through the plug is in register with port *b-b*, and the air which comes from the triple exhaust is forced against the seat of the valve 4, which raises and allows the pressure to escape to the atmosphere through port *d*. As port *d* is controlled by valve 4, the air will exhaust only while this valve is up, and as the weight of the valve, combined with the size of the parts, requires a pressure of fifteen pounds to keep it up, just as soon as the pressure in the brake cylinder has been reduced to a fraction less than fifteen pounds to the square inch, the valve will seat and retain the remaining pressure in the brake cylinder until the handle is turned down. When the handle is turned down it brings port *a* in register with the lower part of *b*, and port *c* is turned to register with port *e*, and thereby allows all the air in the brake cylinder to escape to the atmosphere.

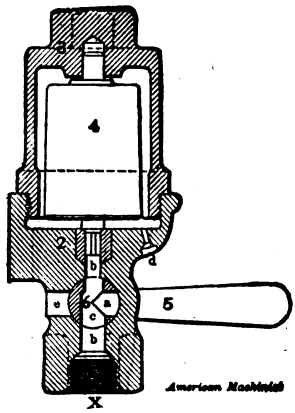

FIGURE 237
PRESSURE-RETAINING VALVE

Therefore if the handle of the retainer is kept turned down the engineer can release the brakes from the engine, but if the handle is turned up (unless the brake leaks off) it will stay set until the handle is turned down.

Retainers were formerly made to hold only ten pounds in the brake cylinder, but are now made to hold fifteen.

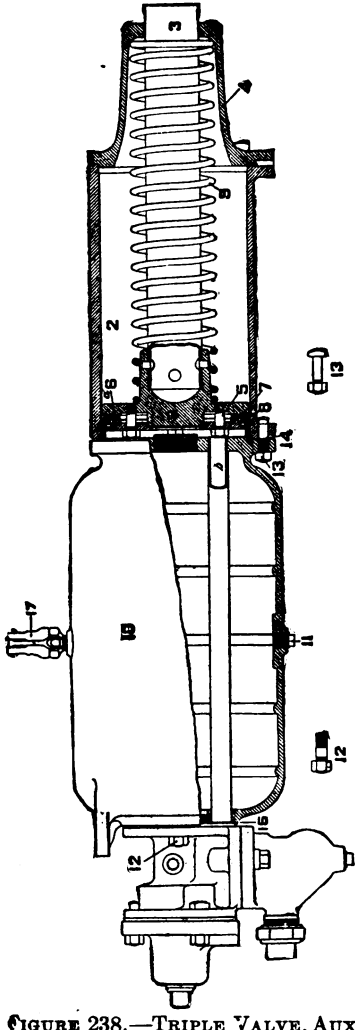

FIGURE 238.—TRIPLE VALVE, AUXILIARY RESERVOIR AND BRAKE CYLINDER COMBINED

With the retainer handle turned up, the second application of the brakes will give a much higher brake-cylinder pressure, if the auxiliary has been allowed time enough to recharge, because the pressure that is already in the cylinder will force the auxiliary to equalize much higher than it would if the cylinder was empty to start with (in the same manner that the emergency application causes an added pressure on account of the trainpipe pressure entering the cylinder before the auxiliary pressure has a chance to get in). For this reason it is best to apply the brakes and recharge the auxiliaries as soon as possible after passing the summit of a mountain grade, and besides it gives an increased reserve of brake power.

Folder plates 32 and

33 show complete illustrations of the Westinghouse quick-action automatic air brake equipment, and the Westinghouse standard high speed air brake.

Questions

685. What can be said of the air brake as regards safety and convenience in running trains?

686. How many systems of air brakes are in use?

687. Of how many parts does the modern air brake consist?

688. Name them in their regular order.

689. What is the function of the air pump?

690. What is the main reservoir for?

691. What is the engineer's brake valve used for?

692. What does the duplex air gauge show?

693. What is the function of the pump governor?

694. Of what does the trainpipe consist and what is it for?

695. Describe the several duties of the quick-action triple valve.

696. For what purpose is the auxiliary reservoir?

697. What parts are contained within the brake cylinder?

698. What takes place within the brake cylinder when air from the auxiliary is allowed to pass into it?

699. Where is the pressure retaining valve located on freight cars and what is it for?

700. What is the function of the automatic slack adjuster?

701. For what purpose is the air brake release signal?

702. Where is it located on freight cars?

703. When this signal appears above the car what does it indicate?

704. When the signal is withdrawn what does it show?

705. If the signal remains up what is indicated?

706. Where is this signal located on flat cars and gondolas?

707. Where is it located in passenger cars?

708. What extra apparatus is required to equip a passenger car with the high-speed brake?

709. How many and what size are the air pumps made by the Westinghouse Co.?

710. How many main pistons are there in the pump?

711. How are they connected?

712. What is the principal difference between the construction of the steam ends of the eight inch and the nine and one-half-inch pump?

713. What difference is there between the two pumps in regard to the air end?

714. Explain the action of the steam end of the pump.

715. How many valves are there in the air end of the pump?

716. How much lift do the air valves have in the eight-inch pump?

717. Explain the action of the air end of the pump.

718. Of what is the main steam valve in the 9½-inch pump composed?

719. Explain the action of the steam end of the 9½-inch pump.

720. How much larger volume of air can the 9½-inch pump compress than can the 8-inch pump?

721. How much more air can the 11-inch pump compress than the 9½-inch pump?

722. Is the 11-inch pump made on the same principle as the 9½-inch pump?

723. What is meant by right and left-hand pump?

724. How may a pump be changed from right to left?

725. What rule regarding lubrication should be observed in starting and running a pump?

726. What precautions should be taken regarding the oiling of the air end?

727. Where is the pump governor located?

728. What are the several functions of the pump governor?

729. What causes the pump governor to act?

730. What is the function of the engineer's brake valve?

731. Name the essential parts of this valve.

732. For what purpose is the rotary valve?

733. What is the equalizing discharge valve for?

734. For what purpose is the equalizing reservoir?

735. What is the function of the feed valve attachment?

736. Explain how it controls the trainpipe pressure.

737. How many kinds of feed valves are there?

738. In what respect do they differ?

739. Which type is preferable and why is it?

740. What term is used to designate the new type of engineer's brake valve from the old one?

741. In what position must the brake handle of the brake valve be in order to have the feed valve in operation?

742. In what manner does the compressed air find its way to the brake cylinder?

743. How are the brakes released?

744. Is it possible to release the brakes with the

handle of the brake valve in any other position than that of full release?

745. How many positions are there for the brake valve?

746. What are they?

747. What is the function of the brake valve in each one of these positions?

748. What main reservoir and trainpipe pressures should be carried with the quick-action brake equipment?

Ans.—Ninety pounds in the main reservoir, which is shown by the red hand, and seventy pounds in the trainpipe, which is shown by the black hand.

749. When the high-speed brake equipment is used what pressure should be carried?

Ans.—One hundred and twenty pounds in the main reservoir and 110 pounds in the trainpipe.

750. When the high pressure control is used, what pressure should be used on the engine?

Ans.—When a light train is being hauled there should be ninety pounds and seventy pounds, the same as with the quick-action brake, but with a loaded train there should be 110 pounds in the main reservoir and ninety in the trainpipe.

751. What is meant by excess pressure, and what is it used for?

Ans.—Excess pressure is the amount of air carried in the main reservoir over and above what is carried in the trainpipe. If the trainpipe governor is set at seventy pounds and the main reservoir or pump governor at ninety pounds, there would be an excess pressure of twenty pounds in the main reservoir. The object in carrying this extra or excess pressure is to enable the engineer to quickly recharge the trainpipe

after making a reduction, in order to strike the triple pistons a hammer blow to drive them to release position.

CHAPTER XII

AUTOMATIC AIR BRAKES—CONTINUED

Having studied at some length the Westinghouse system of air brake equipment, it is now in order to devote a space to the New York system of applying the brakes to car wheels through the medium of compressed air. The general rules that cover the Westinghouse system in regard to train handling, etc., will, with a few minor exceptions, apply also to the New York air brake. The principal difference between the two systems lies in the method of compressing the air, for while the Westinghouse air pump is a simple air pump, consisting of a single steam cylinder, a single air cylinder, pistons, valves, etc., the New York air pump is a duplex air pump, consisting of two steam cylinders, two air cylinders, fitted with the necessary pistons, valves, etc., and the steam cylinders are underneath the air cylinders, while with the Westinghouse system they are placed on top. The diameter of the two steam cylinders in the New York duplex air pump are the same, but the diameters of the air cylinders differ. One of the air cylinders is larger in diameter than its mate is. The larger air cylinder is termed the low-pressure cylinder, for the reason that the air first enters it under atmospheric pressure, is then compressed to a higher pressure by the return stroke of the piston and forced into the other air cylin-

der of smaller diameter, termed the high-pressure cylinder, where it is compressed to a still higher pressure by the return stroke of the high-pressure piston, and forced under this pressure into the main reservoir. The pump is thus in a sense a compound as well as a duplex pump. These pumps are now being made in four sizes, graded as follows: No. 1, No. 2, No. 6 and No. 5. In general principle they are all the same. The dimensions of the different sizes are as follows:

No. 1.—Steam cylinders five inches in diameter, high-pressure air cylinder five inches in diameter, low-pressure air cylinder seven inches in diameter, stroke, nine inches.

No. 2.—Steam cylinders seven inches in diameter, high-pressure air cylinder, seven inches in diameter, low-pressure air cylinder ten inches in diameter, stroke nine inches.

No. 6.—Steam cylinders seven inches in diameter, high-pressure air cylinder seven inches in diameter, low-pressure air cylinder eleven inches in diameter, stroke ten inches.

No. 5.—Steam cylinders eight inches in diameter, high-pressure air cylinder eight inches in diameter, low-pressure air cylinder twelve inches in diameter, stroke twelve inches.

When the New York duplex air pump is in operation there is but one set of pistons, one steam and one air piston, in motion at any one time. Each steam piston controls the action of the reversing valve for the opposite piston, and the valves are so adjusted that when one piston has completed a stroke it must wait for the other piston to make a stroke before it can move again.

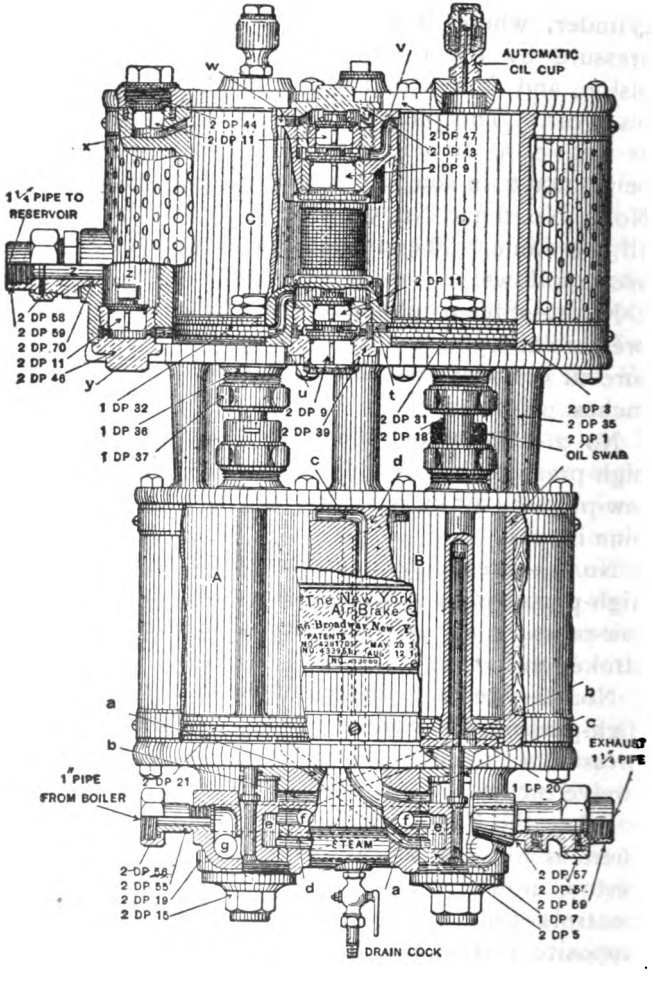

FIGURE 239

NEW YORK DUPLEX AIR PUMP, PISTONS AT REST

The reversing mechanism of the New York air pump is similar to that of the Westinghouse. The steam piston rod is hollow, and on the reversing-valve side of the piston there is a plate bolted, that performs the same function in the New York air pump as does the reversing valve-rod plate in the Westinghouse air pump, that is, it moves the reversing valve up or down. Reference to Fig. 239, which shows the pistons at rest, will make this clear.

It will be noticed that this reversing valve rod has a shoulder on one end, and a button on the other end, for the purpose of controlling the movement of the small D slide valve that is connected to the reversing rod, in the same manner as in the Westinghouse. It will be seen by reference to Fig. 239 that both sets of pistons are at the lower end of the stroke. The boiler connection is clearly shown to the left. The dotted lines crossing each other indicate steam ports. It should be remembered that the reversing valve that controls the admission of steam to the right-hand cylinder is located under the left cylinder and vice versa.

Both slide valves are in their bottom positions in the cut, Fig. 239, and as steam enters the valve chamber under the left-hand piston, it passes on through port *g* to the valve chamber under the right-hand piston, and live steam also passes through the port marked *b* to the under side of the right-hand piston, and at the same time passes up through the port *c* to the top side of the left-hand piston. The steam pressure accumulated under the right-hand, or low-pressure piston, forces it up as shown in Fig. 240. Just as this piston reaches the end of its up stroke, the reversing rod plate engages the button on the end of the reversing

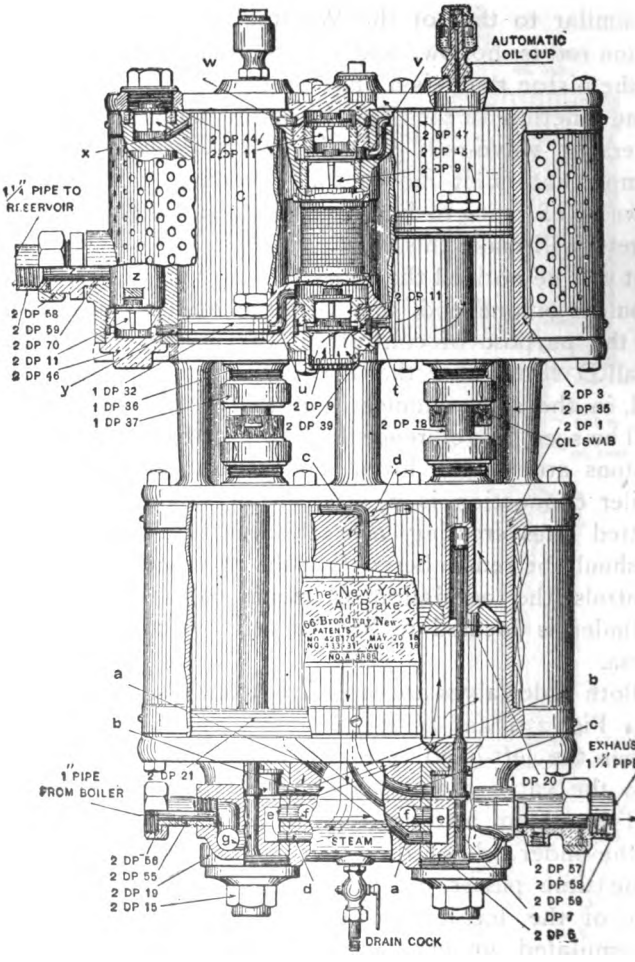

FIGURE 240

NEW YORK DUPLEX AIR PUMP,

UPSTROKE, LOW-PRESSURE PISTON

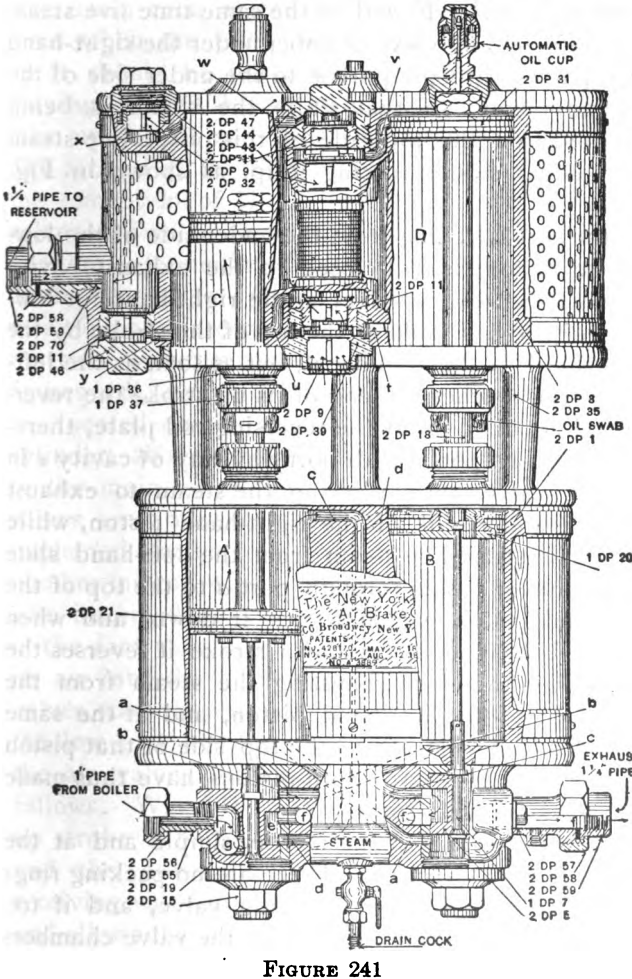

FIGURE 241

NEW YORK DUPLEX AIR PUMP

UP STROKE, HIGH-PRESSURE PISTON

rod and pulls it up. This action connects port *c* with the exhaust cavity F, and at the same time live steam from the reversing valve chamber under the right-hand piston passes through port *a* to the under side of the left-hand piston, so that while the steam is being exhausted from the top side of this piston live steam on the under side is forcing it up, as shown in Fig. 241.

As the port *b*, leading from the under side of the low-pressure piston, is still closed to the exhaust cavity by the left-hand slide valve, so the right-hand, or low-pressure piston, is held at the top of the stroke by the steam that is confined under it, but as soon as the left-hand piston reaches the end of its up stroke the reversing rod is pulled up by the reversing rod plate, thereby connecting port *b* with port *f* by way of cavity *e* in the slide valve, thus allowing the steam to exhaust from the under side of the right-hand piston, while at the same time live steam from the left-hand slide valve chamber passes through port *d* to the top of the right-hand piston, which forces it down, and when it reaches the end of its down stroke it reverses the slide valve, thereby exhausting the steam from the under side of the left-hand piston, and at the same time admits live steam to the top side of that piston which forces it down. Both pistons have thus made a full stroke up and down.

This valve arrangement is very simple and at the same time very effective. There are no packing rings to contend with in the reversing valve, and if too much oil is not allowed to get into the valve chambers there will very little trouble result from this mechanism. If too much oil is allowed to get into the slide valve chamber, it will cause the valve to be forced off

its seat, thereby disarranging the port connections. The drain cock at the bottom should always be left open when the pump is not running, and in starting up it should be left open until dry steam appears. Having studied the steam end, it is now in order to take up the air end and examine into its mechanism. The air end of the New York duplex air pumps, with the exception of No. 6 and No. 5 contains six air valves. Two of these are ordinary receiving valves, two are intermediate valves, and two are ordinary discharge valves. On No. 1 and No. 2 pumps the receiving and intermediate valves are located between the two cylinders, as shown in the preceding cuts—figures 239, 240, etc.—and the two discharge valves are located on the left side of the high-pressure air cylinder, above and below the connection leading to the main reservoir. On No. 6 and No. 5 the air valves are arranged somewhat different, as will be explained farther on. These valves are eight in number instead of six, as in the other sizes of pumps. The intermediate valves are so designated, because of the fact that the low-pressure cylinder discharges its air into the high-pressure cylinder through these valves, and they are therefore intermediate between the low and high-pressure cylinders. The action of the air valves in the No. 1 and No. 2 pump is as follows: When the low-pressure piston starts on its up stroke a partial vacuum is created underneath it, and the atmospheric pressure forces the bottom receiving valve (marked 2 DP 9, Fig. 239) off its seat and allows the air to rush in and fill the low-pressure cylinder underneath the piston, and as this piston does not move again to start on its down stroke until the high-pressure piston completes its up stroke, it is

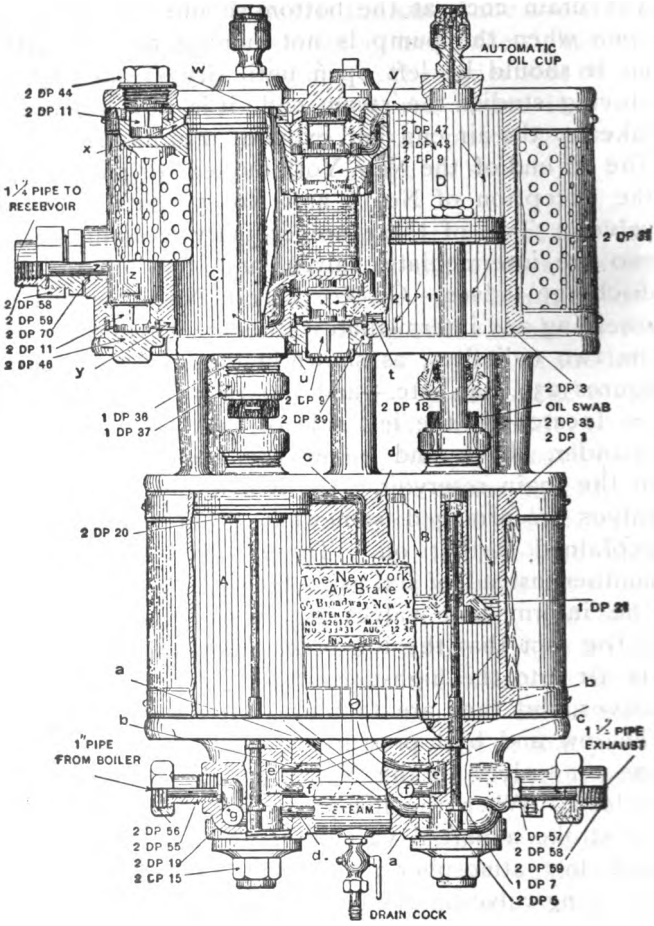

FIGURE 242

NEW YORK DUPLEX AIR PUMP

DOWN STROKE, LOW-PRESSURE PISTON

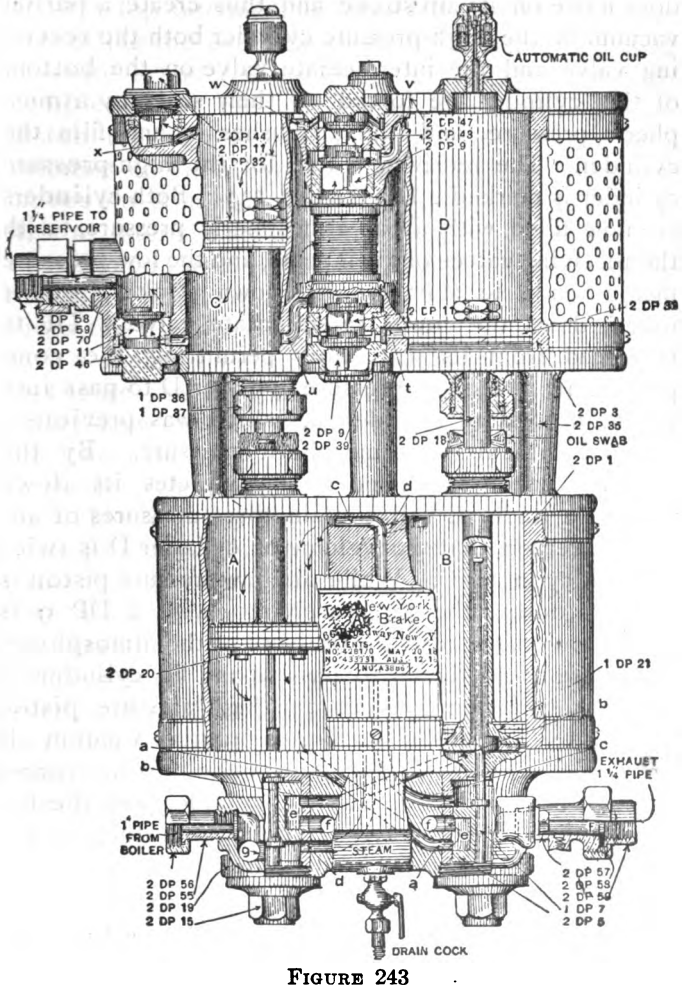

FIGURE 243

NEW YORK DUPLEX AIR PUMP

DOWN STROKE, HIGH-PRESSURE PISTON

plain to be seen that when the high-pressure piston does move on its up stroke and thus create a partial vacuum in the high-pressure cylinder both the receiving valve and the intermediate valve on the bottom of this cylinder are forced off their seats by atmospheric pressure, and the air rushes in and fills the cylinder. The receiving valve for the high-pressure cylinder is marked 2 DP 11, Fig. 239. Both cylinders are now filled with air at atmospheric pressure, with the receiving valves on their seats, and the low-pressure piston ready to start on its down stroke. As it moves down the lower intermediate valve 2 DP 11 is forced from its seat, thus permitting the compressed air in the low-pressure cylinder D to pass into the high-pressure cylinder C, which was previously charged with air at atmospheric pressure. By the time the piston in cylinder D completes its down stroke, cylinder C will contain three measures of air, for the reason that the volume of cylinder D is twice that of cylinder C. While the low-pressure piston is moving down, the top receiving valve 2 DP 9 is forced from its seat by the pressure of the atmosphere, thus permitting the air to pass in and fill cylinder D above the piston. When the high-pressure piston moves on its down stroke, a partial vacuum is created in cylinder C, the atmospheric pressure forces the top receiving valve on that cylinder, and the top intermediate valve 2 DP 11, both from their seats, and by the time the high-pressure piston has completed its down stroke, cylinder C is filled with air at atmospheric pressure, as is cylinder D also, the pressure in the two cylinders being equalized. The low-pressure piston now begins its up stroke, and as it moves up the air on the top side of it is compressed,

the top receiving valve is closed and held to its seat, and the top intermediate valve is forced from its seat, permitting the compressed air to pass into the high-pressure cylinder C, as shown in Fig. 240. Upon the completion of the up stroke of the low-pressure piston the high-pressure cylinder is filled with three volumes of air above its piston, and as this piston moves on its up stroke, it compresses the air above it, the intermediate and top receiving valves being closed, and the air under pressure is discharged into the main reservoir through the top discharge valve. From this description it will be seen this pump is not only a duplex pump but a compound pump. Referring to Figure 244 the plan view of a No. 5 duplex air pump shows two air inlets, the one on the right hand side being for the high-pressure cylinder, and the one on the left hand side supplies the low-pressure cylinder. The intermediate valves on the No. 5 and No. 6 pumps are located at the same points as on the No. 1 and No. 2 pumps, but the No. 5 and No. 6 pumps have a separate set of receiving valves as shown in Fig. 244.

The general instructions with reference to oiling, speed, drainage, etc., apply to the New York pumps the same as they do to the Westinghouse pumps. Figs. 239 to 243 show the automatic oil cup with which these pumps are equipped.

The Westinghouse automatic oil cup consists of a brass body, in the main chamber of which the oil is contained, and extending through this chamber is a regulating valve, the end of which is pointed, so that if it is desired to increase or diminish the flow of oil the pin valve may be moved up or down by means of a regulating nut, and kept in position by a small lock

nut. In the body of the cup, below the pin valve, there is a ball valve, and the operation of this automatic oil cup is as follows: As there is a small port

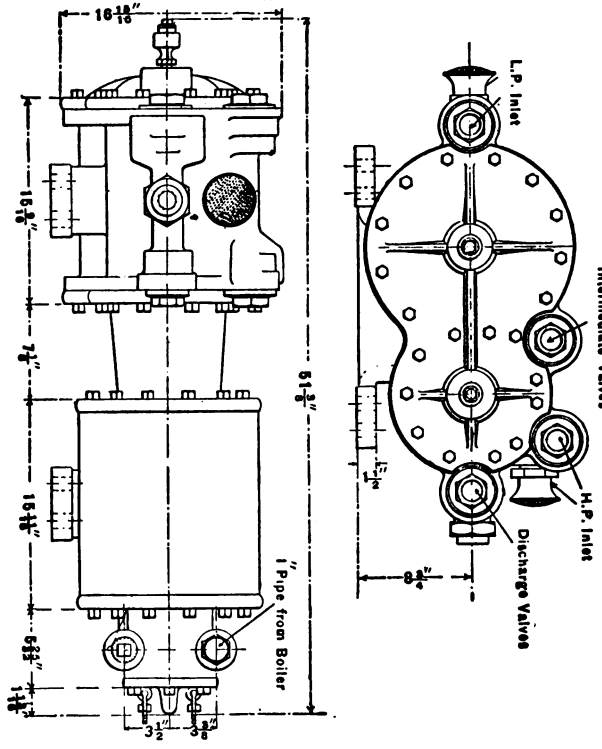

(a) End View. (b) Plan View.

FIGURE 244

No. 5. DUPLEX AIR PUMP

in the cap nut, atmospheric pressure is always admitted and present on the surface of the oil in the main oil chamber, consequently, when the pump

piston moves down, the partial vacuum in the pump cylinder causes the ball valve to leave its seat, and the oil which has previously passed from the main oil chamber around the point of the regulating valve into the passage controlled by the ball valve is drawn into the pump cylinder in the form of a fine spray. When the piston makes its up stroke the compressed air holds the ball valve to its seat, thereby preventing the oil from being blown out of the oil cup chamber. This refers to the No. 1 oil cup. The No. 2 Westinghouse oil cup consists of a brass body having a chamber in which the oil is contained, and instead of having a ball valve, and a regulating valve, there is a small check valve, to which is attached a needle rod of very small diameter, and which extends up through a very small opening into the bottom of the oil chamber. On the under side of the check valve there is a spring, and the operation of the No. 2 automatic oil cup is as follows: As the pump piston moves down, the partial vacuum in the pump cylinder causes the check valve to be unseated, thereby allowing the oil to be drawn from the oil cup into the pump cylinder. The up stroke of the piston causes the check valve to be held to its seat, thus preventing the oil from being blown out of the cup. In the bodies of both kinds of cups there are suitable heating chambers for the purpose of allowing the warm compressed air to surround the oil chamber, thereby keeping the oil in a liquid state.

The New York automatic oil cup is made in two styles, A and B.

Style A consists of a brass body, in which there is an oil chamber, and in the center of the body there is a regulating valve that can be moved up or down

for the purpose of increasing or decreasing the amount of oil to be fed to the pump.

The operation of this cup is as follows: When the piston in the air cylinder moves on its up stroke, compressed air is forced through the oil to the top of the oil chamber and is stored there above the oil. When the piston has completed its up stroke and is moving on the down stroke, the partial vacuum created above it, combined with the compressed air on top of the oil, causes a small portion of the oil to be drawn into the air cylinder of the pump and sprayed around on the walls.

The New York style B automatic oil cup has no adjustable feed, but has instead a very small port through the body of the oil cup, which permits a small amount of oil to be drawn into the air cylinder each time the piston makes a down stroke.

New York Pump Governor. The principle of the New York Pump governor is similar to that of the Westinghouse, as is also its operation. There is a slight difference in the construction of the two governors, but not enough to make it necessary to re-describe the entire governor here. It has a diaphragm, regulating spring, and a regulating nut, as has the Westinghouse pump, but instead of having a diaphragm pin valve like the Westinghouse, the diaphragm valve in the New York pump governor closes the port leading from the diaphragm chamber to the steam piston. Another difference is that there is no spring under the steam piston, as in the Westinghouse, so that the steam valve and the steam valve piston are forced up by steam pressure alone, whereas with the Westinghouse both steam and spring are utilized to force the steam-valve piston up. There is an outlet port from the

steam piston chamber for the purpose of allowing any back pressure to escape to the atmosphere, which is the same as in the Westinghouse. This vent port pre-

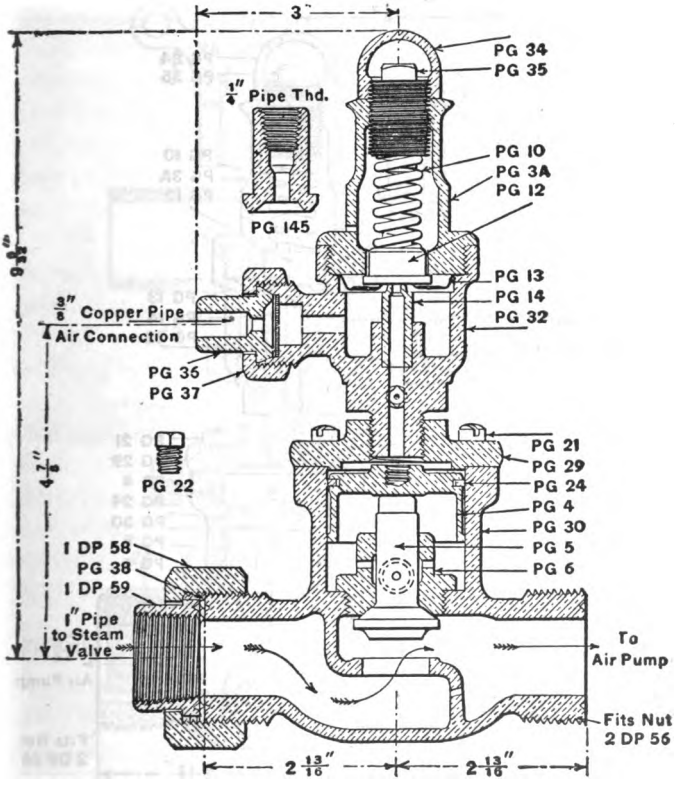

FIGURE 245

STYLE C. NEW YORK PUMP GOVERNOR, STEAM VALVE OPEN

vents the pressure from accumulating under the steam piston. If this pressure were not allowed to escape, the air pressure on top would not be able to force the

steam valve to its seat and shut off the pump, whereas, when steam is operating against the steam valve alone, it requires only about one third as much air pressure

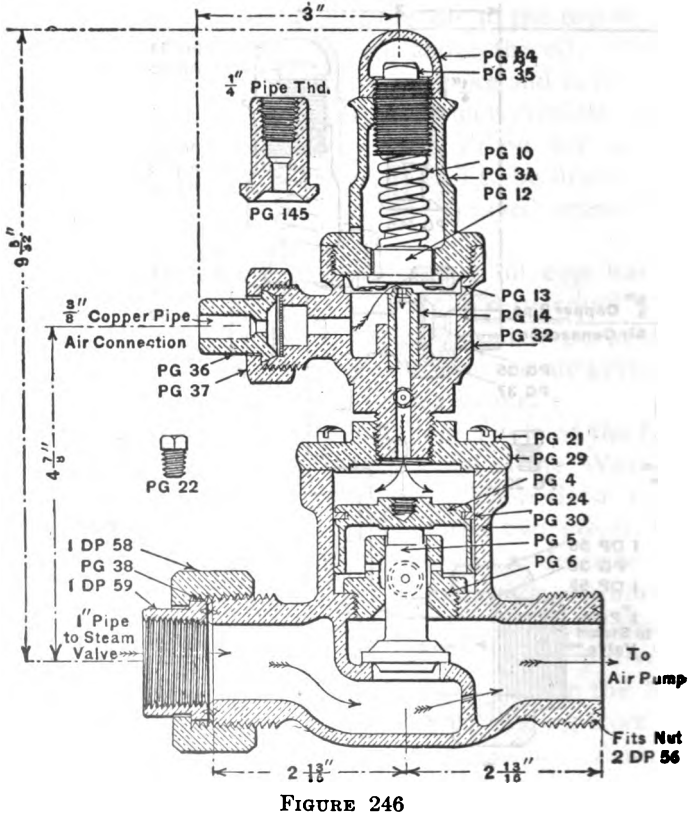

FIGURE 246

STYLE C. NEW YORK PUMP GOVERNOR, STEAM VALVE CLOSED

on the large area of the top of the piston to overcome the steam pressure, and force the steam valve down. Figure 245 shows style C of the New York pump

governor, with the steam valve open, and Fig. 246 shows this same style C governor with the steam valve closed. The old style A New York governor requires

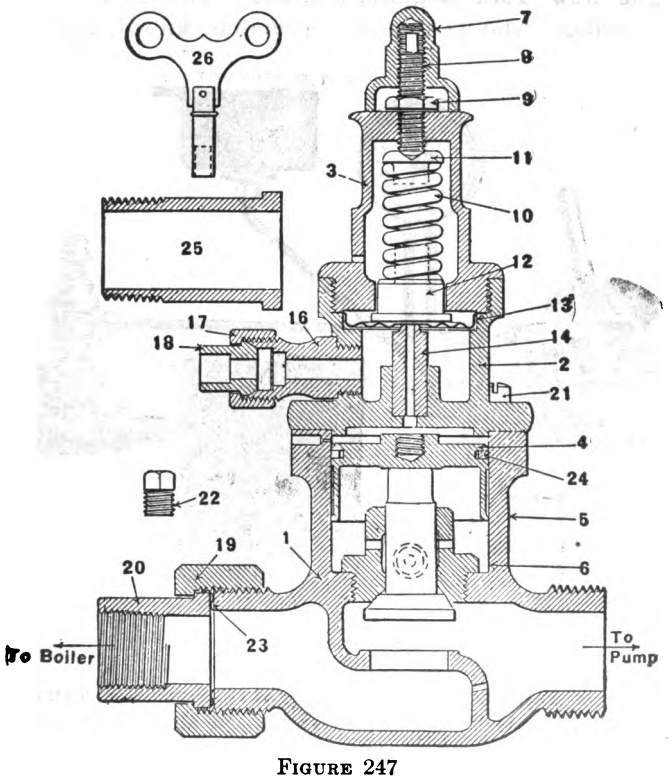

FIGURE 247

STYLE A. NEW YORK AIR PUMP GOVERNOR

a key with which to set the regulating spring, and is shown in Fig. 247. The duplex pump governor is simply a governor with one steam portion, but having two air portions. A duplex governor consists of one

steam valve body, steam valve, steam valve piston, and a Siamese fitting to which is attached two pressure tops, or diaphragm valve portions.

The New York Engineer's Brake. The student of air brakes who possesses a previous knowledge of

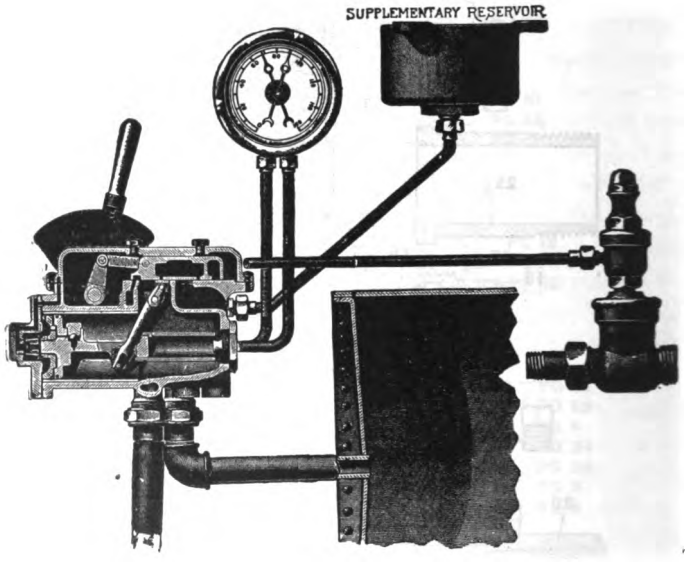

FIGURE 248

GENERAL ARRANGEMENT OF BRAKE VALVE, SUPPLEMENTARY RESERVOIR, AIR GAUGE, PUMP GOVERNOR AND MAIN RESERVOIR

the Westinghouse engineer's brake valve should remember when studying the engineer's brake valve of the New York duplex system that, when service application is made with the New York engineer's brake valve, the first escape of air is direct from the trainpipe, but that the port opening from the trainpipe to the atmosphere is much smaller

in making a service application than it is when making an emergency application. With the Westinghouse valve the first escape of air is from off the top of the equalizing discharge valve when a service application is made. Another important feature in connection with the New York engineer's brake valve is that the service position is divided up into five notches, the position or notch in which to place the handle in beginning a service application depending upon the size of the train, as, for instance, if a train of four cars or less is being handled the application should be commenced by placing the handle of the valve in the first notch, because of the fact that the service port gradually becomes wider as the handle is moved over the quadrant, and with a short train of four cars or less the trainpipe volume is so small that if the handle were moved past the first notch it is very likely to produce an emergency application, owing to the fact that the trainpipe pressure would be reduced too suddenly. The essential parts of the New York Engineer's Brake Valve are, the valve body proper, a main slide valve, which is connected by a link to a shaft operated by a handle, in which there is a lock bolt for the purpose of engaging the notches in the quadrant. Under the main slide valve there is a small cut-off slide valve, which is controlled by an arm connected to a graduating piston. This graduating piston contains a small ball valve for the purpose of admitting air into chamber D, or supplementary reservoir, and a ball-faced vent valve fastened to the end of the equalizing piston for the purpose of closing port O (see Fig. 249).

The cut, Fig. 248, showing the duplex gauge, illustrates how the single governor, supplementary reser-

voir, main reservoir, and trainpipe are connected to the brake valve, making in all six pipe connections. Fig. 249 shows the handle in full release position. In the

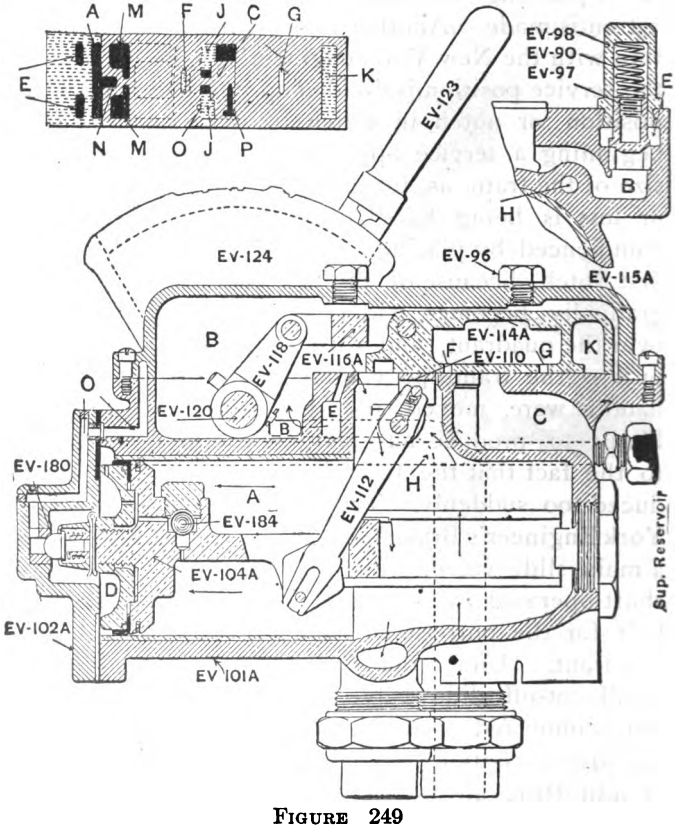

FIGURE 249

NEW YORK ENGINEER'S BRAKE VALVE, RELEASE POSITION

top right-hand corner is a sectional view of the excess pressure valve, while in the top left-hand corner is a view of the main slide valve, and valve seat. In

studying this view of the face of the main slide valve, it should be remembered that it is equivalent to looking directly through the top of the valve, and that

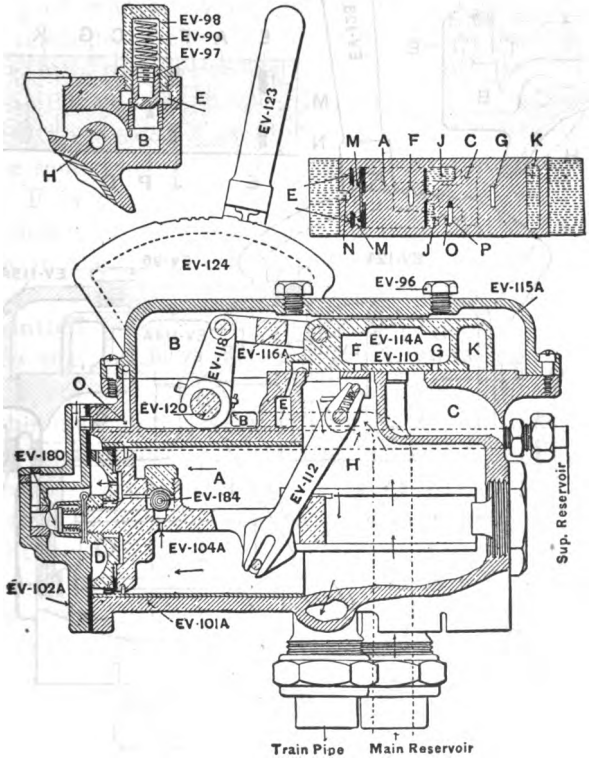

FIGURE 250

NEW YORK ENGINEER'S BRAKE VALVE, RUNNING POSITION

the slanting lines represent the face of the main slide valve, while the dotted horizontal lines represent the slide valve seat. It will be noticed that port K in the main slide valve extends across nearly the whole

width of the valve, as does also the cavity marked

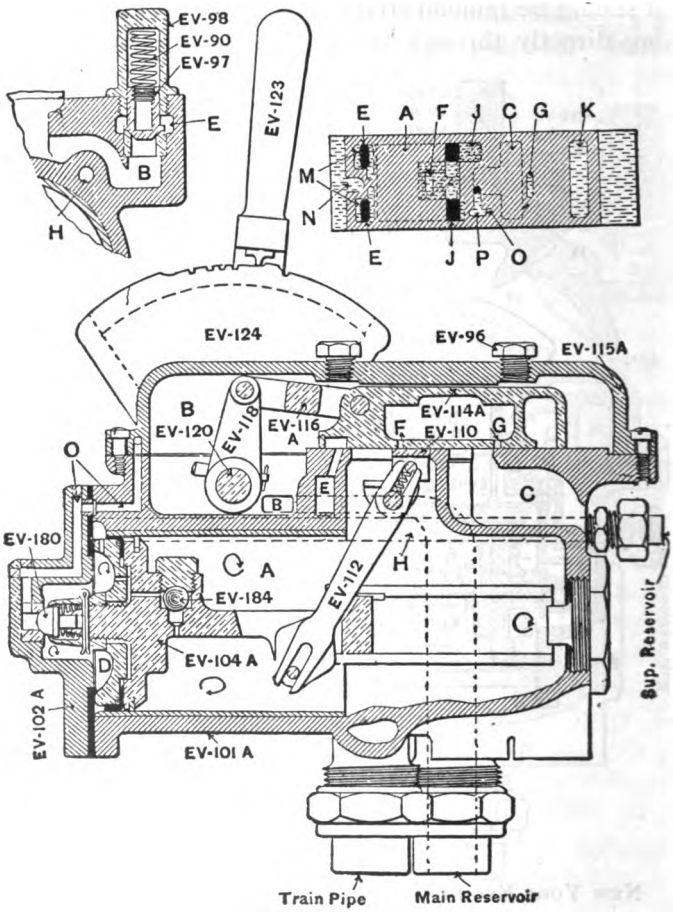

FIGURE 251

NEW YORK ENGINEER'S BRAKE VALVE, LAP POSITION

M, and that the ports F and G are directly on the center line, while port J and cavity P are on the side,

therefore, when looking at the main slide valve sectionalized, it should be remembered that it is a view of the valve as it would appear if cut half in two. The port marked A in the valve seat is the opening that leads from chamber B by the end of main slide valve into chamber A, and this port A is controlled by the face of the main slide valve. In figure 249 it will be noticed that port F is closed by the main valve seat, whereas in the diagram of running position port F is closed by the small cut-off valve. The position of the cut-off valve is indicated by dotted lines in the view illustrating the face of the main valve. The large exhaust cavity C is also indicated by dotted lines in the plan view of the main slide valve seat. The main slide valve has four cavities which are designated as M, F-G, and K. The ports in the main slide valve are F, G, J, K and N. The ports in the main valve seat are designated by the letters E, A, C and O. As this great number of ports is liable to be somewhat confusing to the student, it might be well at this point to explain that, when the main slide valve is moved to full release position, main reservoir air passes from chamber B, by the end of the slide valve directly through the large port A into chamber A, and from thence straight into the trainpipe. When the handle of the valve is in running position, main reservoir pressure passes through port E in the slide valve seat, and cavity M in the slide valve, into port A and thence to the trainpipe. While the air is passing from chamber B through cavity M it is also passing through chamber E into the pump governor pipe. In lap position, ports J and A in the slide valve are closed by the main slide valve, and exhaust port F is kept closed by the small

cut-off valve, as shown in Fig. 251. In service graduating position, Fig. 252, ports E and A are closed by the main slide valve, but port F is moved

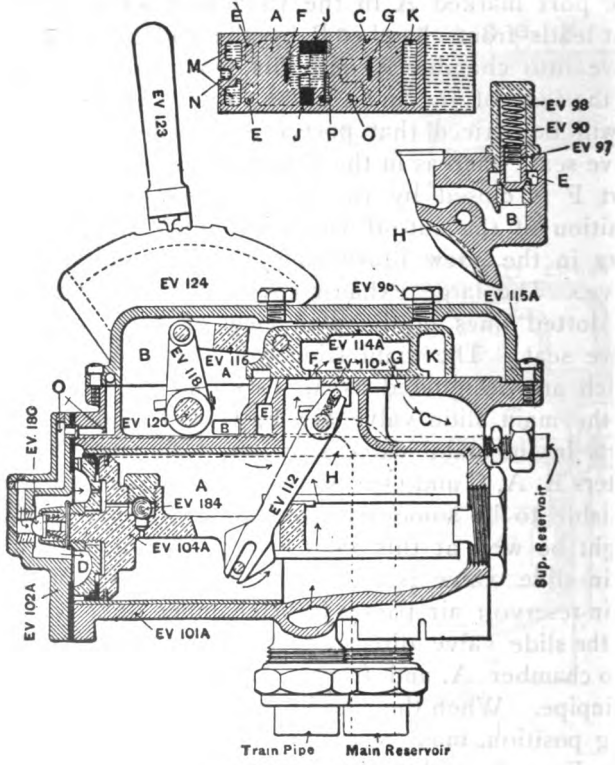

FIGURE 252

NEW YORK ENGINEER'S BRAKE VALVE, SERVICE GRADUATING POSITION

back of the cut-off valve so that, while main reservoir pressure is shut off, trainpipe pressure can pass up through port F in the main slide valve

and out through port G into the main exhaust cavity C.

The handle being in service graduating position, when trainpipe pressure has exhausted below atmospheric pressure in the supplementary reservoir or chamber D, the equalizing piston is then forced forward by the pressure in chamber D. This action causes the cut-off valve to move over and close exhaust port F. With the handle in service graduating position the main slide valve closes the top end of port O, because, if it did not, when the equalizing piston moved forward, the unseating of the ball-faced check valve would permit all the air from the supplementary reservoir to escape, and thereby prevent the automatic lapping of the brake valve. Should the handle be moved to another service graduating notch, just as soon as the trainpipe pressure had exhausted below what was left in the supplementary reservoir, the equalizing piston would again move forward and cause the cut-off valve to again lap exhaust port F. This action would continue in each of the graduating notches, but when the handle is moved to emergency position, the valve does not automatically lap itself, for the reason that the equalizing piston has then made its full stroke. When the handle is in emergency position, Fig. 254, the large port in the main slide valve, marked J, is connected to the large exhaust port, marked K, which causes the trainpipe pressure to pass out through exhaust passage C and be reduced suddenly, thereby causing all the triple valves on the train to assume the emergency position. When the handle is thrown from emergency, service, or lap position, back to full release, the increase in the trainpipe pressure

drives the equalizing piston back. This action causes

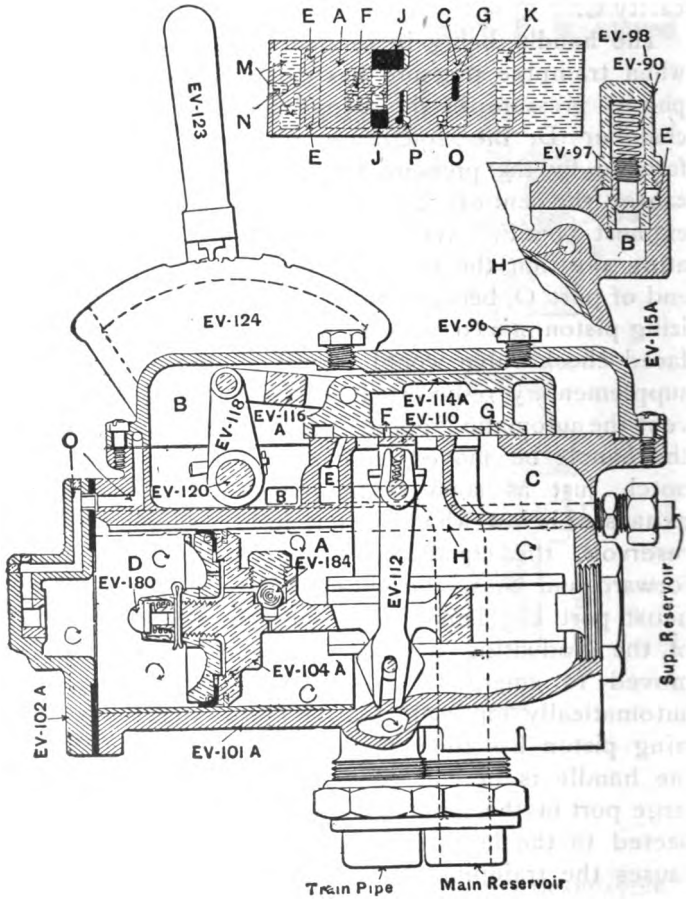

FIGURE 253

NEW YORK ENGINEER'S BRAKE VALVE, AUTOMATIC LAP POSITION

the vent valve 180, in the end of the piston 104A, to close the bottom end of passage O, because in full

release, running, or positive lap position, the top end of port O is open to exhaust cavity C by way of cavity P in the main slide valve. In order to get a clear idea of the purpose of each one of the several ports and cavities, the following brief summary of their different functions is here given. Port E in the slide valve, and cavity M in the main slide valve are primarily used for the purpose of directing the main reservoir pressure through the excess pressure valve into the trainpipe. Chamber E supplies trainpipe pressure to the pump governor. Ports F and G in the main slide valve are trainpipe exhaust ports, for the purpose of making a service application of the brakes. Ports J and K are primarily used for the purpose of making an emergency application in connection with exhaust port C. Passage C is the main exhaust port of the brake valve. Cavity P is for the purpose of connecting port O in the main valve seat with the exhaust passage C.

Port N in the main valve is for the purpose of increasing the area of port A when the handle is in full release position, thereby allowing a full and free passage from main reservoir into the trainpipe when releasing the brakes.

Passage O begins in the cap of the valve body, 102 A, and passes through the wall of the cover, 115A, of the brake valve, when it sinks into the valve body, 101A, and ends up in the main slide valve seat, under the main slide valve.

Passage H, which leads from chamber D, passes through the body of the brake valve to the pipe connection with the supplementary reservoir. A small ball valve, 184, in the equalizing piston is for the purpose of supplying air to the supplementary reservoir,

so that the trainpipe pressure and chamber D pressure may equalize when the brake valve is in either running

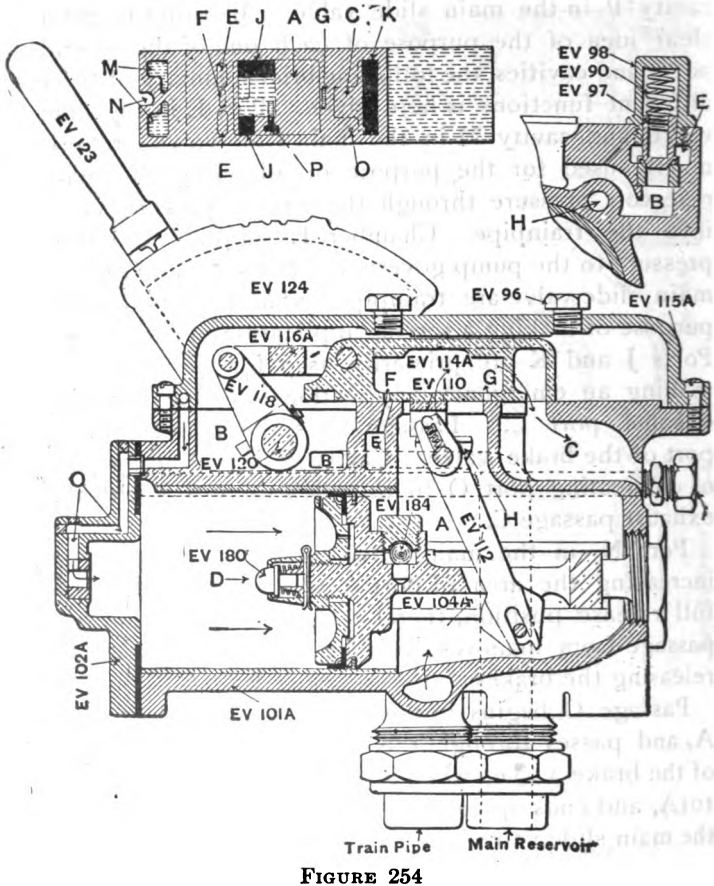

FIGURE 254

NEW YORK ENGINEER'S BRAKE VALVE, EMERGENCY POSITION

or release position. The vent valve in the end of the equalizing piston is for the purpose of controlling the

bottom end of passage O. The purpose of passage and port O is to allow the pressure in chamber D to escape to the atmosphere when the equalizing piston is forced back to its normal position. The function of the excess pressure valve, 97, is to maintain a given pressure in the trainpipe when the handle of the brake valve is in running position.

The functions of the several notches on the quadrant are as follows: When the handle is in the extreme forward position, main reservoir pressure is fed directly into the trainpipe, the first notch, which is also indicated by a small pin on the side of the quadrant, is running position, and in this position pressure from the main reservoir is fed into the trainpipe through an indirect passage, or by way of the excess pressure valve. The next notch on the quadrant is known as positive lap position, and when the handle is in this position, all ports in the brake valve are closed between the main reservoir and trainpipe, and between the trainpipe and the atmosphere, and in this position the pressure from the trainpipe and pump governor is also shut off, and it is because of this fact that a duplex pump governor is necessary with the New York brake valve. The next notch after positive lap is the first service graduating notch, and when the handle is in this position the brake valve will allow about five pounds of trainpipe pressure to exhaust, when it will automatically lap itself. The second graduating notch will allow about eight pounds of trainpipe pressure to exhaust, when the valve will automatically lap itself. The next notch will cause an exhaust from the trainpipe of eleven pounds pressure. The fourth notch causes a sixteen-pound reduction, and the fifth notch is full service position

causing a reduction in trainpipe pressure of twenty-three pounds. When the handle is placed in any one of the service graduating positions, the brake valve will automatically lap itself, but when the handle is placed in the emergency position, then the automatic lap feature is eliminated. When the valve automatically laps itself, the equalizing piston moves the cut-off so that it covers port F, but when the handle of

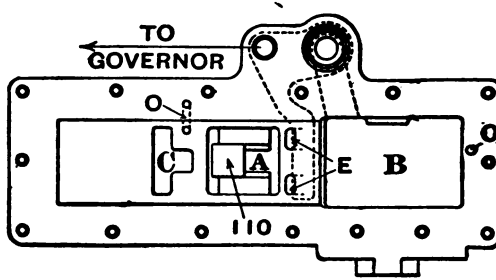

FIGURE 255

SHOWING PORT O IN MAIN SLIDE VALVE SEAT

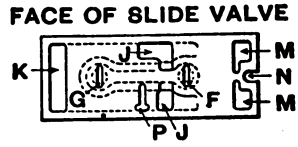

FIGURE 255a

the valve is moved to positive lap position, the main valve slide places port F over the cut-off valve.

Should the handle be placed in the five-pound notch, and while it was in this position trainpipe leakages should cause the trainpipe pressure to be reduced to sixty pounds or less (when working with a seventy-pound standard) then, when the handle was moved to the eight-pound notch, there would be no exhaust

from the trainpipe, for the reason that the trainpipe leakages would cause the pressure in chamber D tc push the equalizing piston forward, and cause the cut-off valve to keep exhaust port F closed. This is a splendid feature of the New York brake valve. As the automatic lap feature is dependent upon the proper movement of the equalizing piston, it will be seen at once that, should there be any leakage from chamber D, or the supplementary reservoir, it would prevent the equalizing piston from moving forward, and causing the cut-off valve to close exhaust port F. There are several other things, besides direct leakage from chamber D to the atmosphere, which will prevent the automatic lapping of the valve, and they may be enumerated as follows: A leak by the packing leather of the equalizing piston will prevent the automatic lap. Should the face of the main slide valve be scratched so that it will not seat properly on the cut-off valve, it will prevent the automatic lap. Should the ball check valve fail to seat properly, it will prevent automatic lap. Should the seat of the cut-off valve become scratched so that the valve did not seat properly, it would prevent the automatic lap. Should the arm connecting the cut-off valve to the equalizing piston become bent or disarranged in any manner, it would prevent the automatic lap. The two cap screws in the cover of the brake valve are for the purpose of admitting oil to the main slide valve seat. To oil the slide valve seat, release all main reservoir pressure, cut out the trainpipe from the brake valve, exhaust all air pressure, and remove the cap screws from the valve cover, then throw the handle to full release position, and drop in just a small quantity of good oil onto the valve seat. Then throw the handle

to emergency position and drop a few drops of oil onto that end of the valve seat, and work the handle back and forth several times in order to distribute the oil. Be careful not to use too much oil, as it is liable to gum up the valve. While the air pressure is off, unscrew the cap nut of the excess pressure valve, and wipe that valve off with kerosene, and be sure that it is wiped dry before replacing the cap screws. When adjusting the regulating spring of the excess pressure valve, place the brake handle in running position, and allow the air pump to raise the pressure until the red hand of the gauge shows twenty pounds before the black hand begins to move. Should the black hand begin to move before the red hand reaches the twenty-pound point, it indicates that the graduating spring needs to be tightened down, while on the other hand if the black hand of the gauge did not begin to move until the red hand had passed the twenty-pound mark, it would indicate that the graduating spring should be loosened up and slacked off slightly. With the New York brake valve handle in running position,

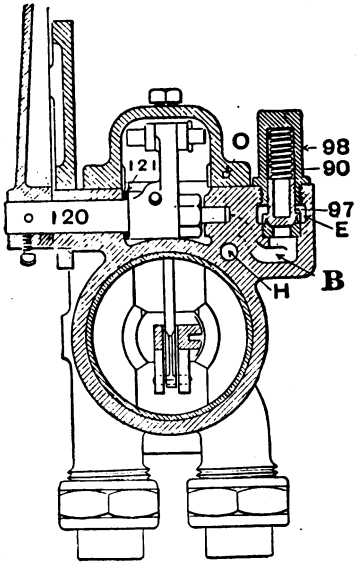

FIGURE 256
CROSS SECTION, SHOWING PASSAGE H IN BODY, AND PASSAGE O IN VALVE COVER

the excess pressure is accumulated before the train-pipe pressure begins to show on the gauge, whereas with the Westinghouse system it is just the opposite, as no excess pressure accumulates until after the train-pipe is fully charged. The old style A, New York brake valve, differs from the present styles, B and B-1, in that it does not have the vent valve in the end of the equalizing piston, neither does it have the ball check valve nor port O in the valve seat. Consequently the valve will not automatically lap when the handle is changed direct from full release position to service graduating position. In order to obtain the automatic lap feature it is necessary to have the supplementary reservoir pressure equal to trainpipe pressure at the beginning of a service application, and with the old style A valve, which does not have the ball check valve, the only way in which the supplementary reservoir can be charged with the necessary pressure is by placing the handle in running position.

The New York plain triple valve is so nearly like the Westinghouse plain triple valve that it requires no special description here, and the same instructions regarding the Westinghouse plain triple will apply to the New York plain triple also.

The New York Quick-Action Triple Valve. In studying the following illustrations of the New York quick action triple valve it should be remembered that the valve itself does not have exactly the shape shown in Fig. 257, 258, 259 and 260, but those portions of the triple which show passage H, port J, vent valve 137, and check valve 139, are shown in Fig. 261 and 262. The object had in view in illustrating the valve in this manner was to show plainly the relation of these ports, passages, and valves, to the other parts of

the triple. The principal operative parts of the New York quick-action triple valve are, the main triple piston, 128; the exhaust slide valve, 38; the gradu-

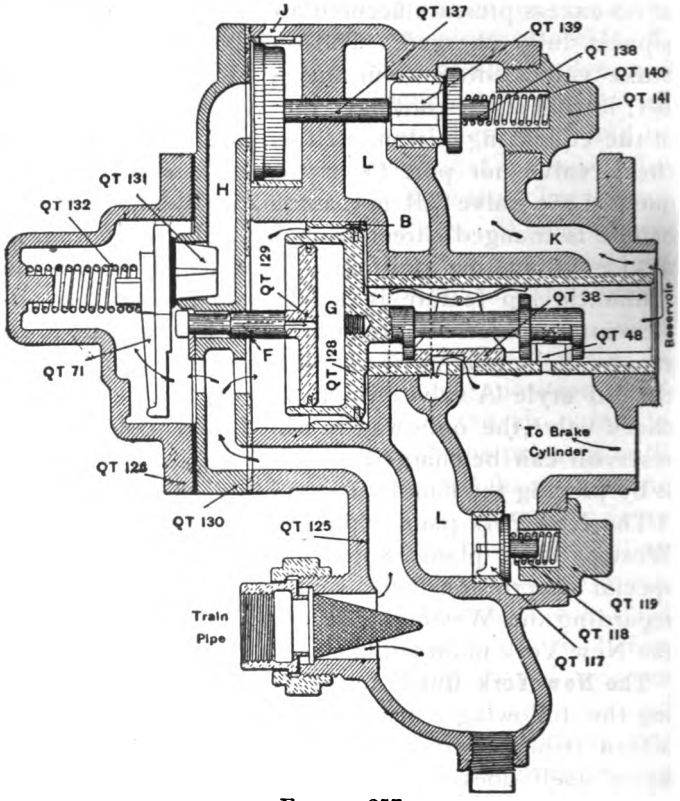

FIGURE 257

NEW YORK QUICK ACTION TRIPLE VALVE, RELEASE POSITION

ating slide valve, 48; the vent piston, 129; the rubber-seated vent valve, 131, and spring, 132, the emergency piston, 147, with rubber-seated quick-action valve 139, and spring, 140.

Now return to brake cylinder check valve, 117, and spring, 118: It will be noticed that the vent piston,

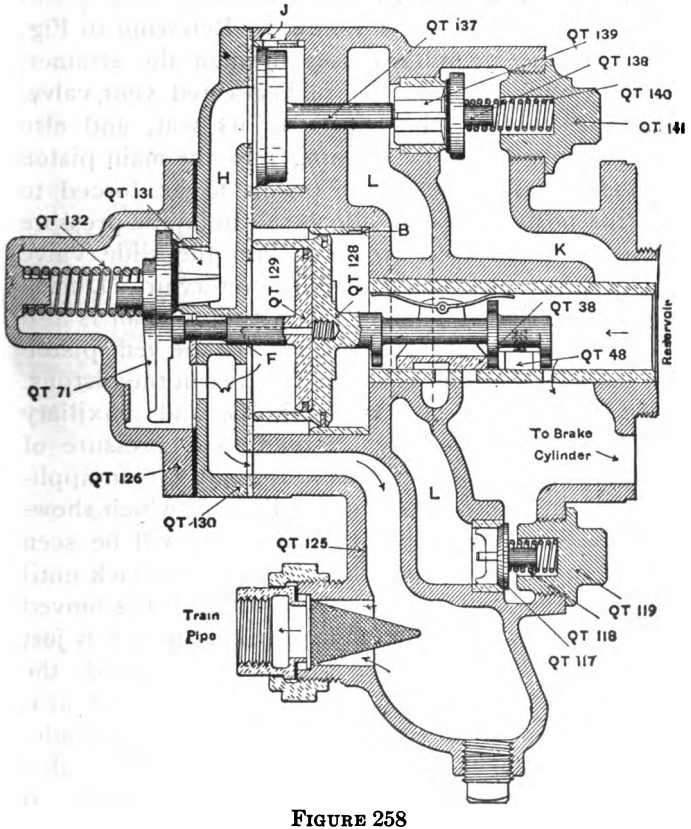

FIGURE 258

NEW YORK QUICK ACTION TRIPLE VALVE
SERVICE APPLICATION POSITION

129, has a port, F, which leads through its center into chamber G of the main triple piston. This allows trainpipe pressure to get between the pistons, thus

forming a cushion that takes the place of the graduating spring used in the Westinghouse triple.

The passage of the air through the New York quick-action triple valve is as follows: Referring to Fig. 257, trainpipe pressure passes through the strainer, fills the cavity back of the rubber-seated vent valve, 131, thus holding that valve to its seat, and also passes through a large opening into the main piston chamber, causing the main piston to be forced to charging position. This allows the trainpipe pressure to pass through feed groove B into the slide valve chamber, and on into the auxiliary reservoir. During the time this action is taking place, trainpipe air is also feeding through port F in the stem of the vent piston 129, thereby charging chamber G between the pistons. When the trainpipe, chamber G, and auxiliary reservoir are all equally charged to a pressure of seventy pounds the equipment is ready for an application of the brake. Referring to Fig. 258, which shows the triple in the service application, it will be seen that the main triple piston, 128, has moved back until it touches the vent piston, 129, and that it has moved this vent piston back far enough so that port F is just closed. As the trainpipe pressure is reduced, the pressure in chamber G is reduced also, but as it reduces slower than the trainpipe pressure, it graduates the movement of the main triple piston, so that when the main piston has made its full stroke, it has not disturbed the rubber-seated vent valve 131, but has moved the graduating slide valve 48 to a position which opens the supply port from the auxiliary reservoir to the brake cylinder, and at the same time has moved the exhaust slide valve 138 forward, and closed the exhaust port from the brake

cylinder to the atmosphere. When the main piston moves forward it gradually closes port F before all of the pressure in chamber G has exhausted, conse-

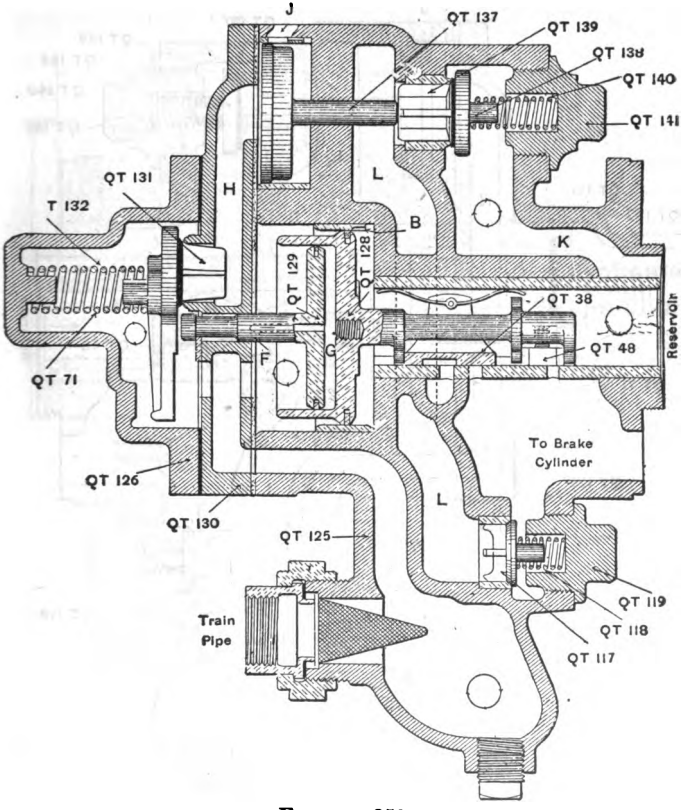

FIGURE 259

NEW YORK QUICK ACTION TRIPLE VALVE, SERVICE LAP POSITION

quently when the auxiliary pressure has reduced to a degree slightly less than trainpipe pressure, the air that is confined in chamber G expands and forces the

main piston back a slight distance. This causes the graduating slide valve to close the port from the auxiliary reservoir to the brake cylinder without disturbing

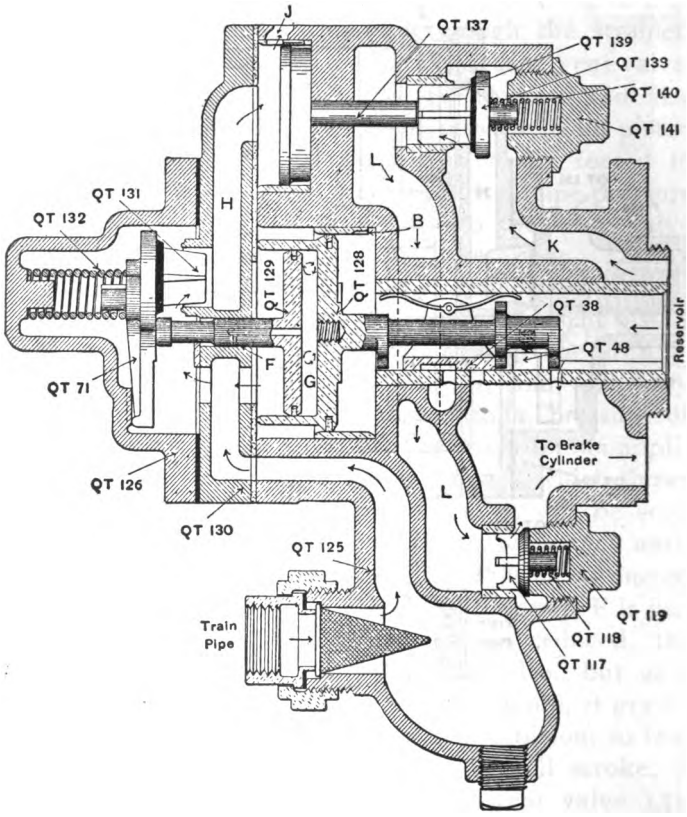

FIGURE 260

NEW YORK QUICK ACTION TRIPLE VALVE, EMERGENCY POSITION

the exhaust slide valve that controls the exhaust port from the brake cylinder to the atmosphere. The triple valve is now in lap position, as shown in Fig.

259. The emergency action of this valve, shown in Fig. 260, is brought about in the following manner: The air cushion in chamber G cannot be reduced through port F as quickly as the trainpipe pressure is reduced, and, consequently, when a sudden reduction

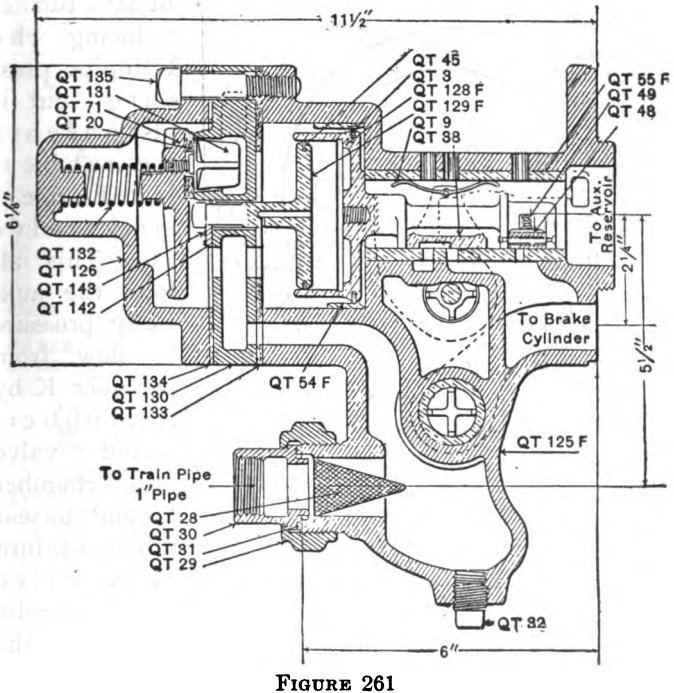

FIGURE 261

STYLE F. NEW YORK QUICK ACTION TRIPLE VALVE

is caused in the trainpipe pressure, it causes the auxiliary pressure to drive the main piston back so quickly that port F is closed before chamber G can empty itself, and with an air cushion between the two pistons, the stem of the vent piston strikes the rubber

seated vent valve and drives it from its seat. This allows trainpipe pressure to pass into passage H, and thereby forces the emergency piston 137 forward, which action not only opens port J to the atmosphere for the purpose of still further reducing the trainpipe pressure, but it also unseats the rubber-seated emergency valve 139. This allows the auxiliary pressure to flow from chamber K by the rubber-seated valve into chamber L and unseat the non-return check valve 117, thereby causing the auxiliary reservoir pressure to quickly equalize with the brake cylinder pressure. When the trainpipe pressure has reduced below the auxiliary reservoir pressure, the emergency valve 139 is forced to its seat, and the brake cylinder pressure equalizes with the pressure in chamber L,

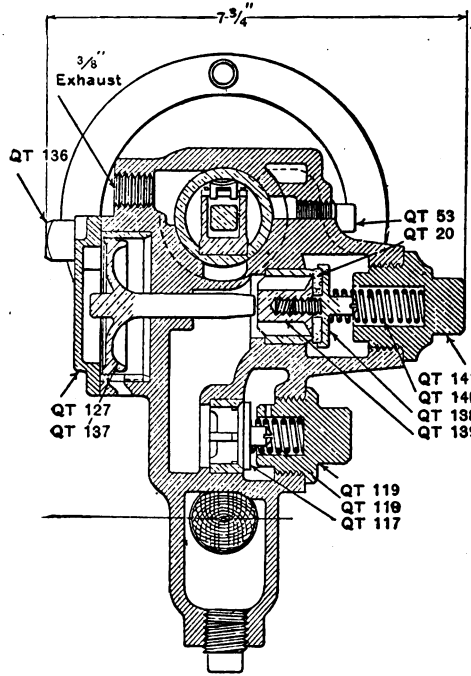

FIGURE 262

STYLE F. NEW YORK QUICK ACTION TRIPLE VALVE

causing the non-return check valve to go to its seat, and it is held there both by the brake cylinder pressure and the spring 118.

The New York Combined Automatic and Straight Air Brake Valve. This valve performs the same functions as the Westinghouse, that is, it applies the engine and

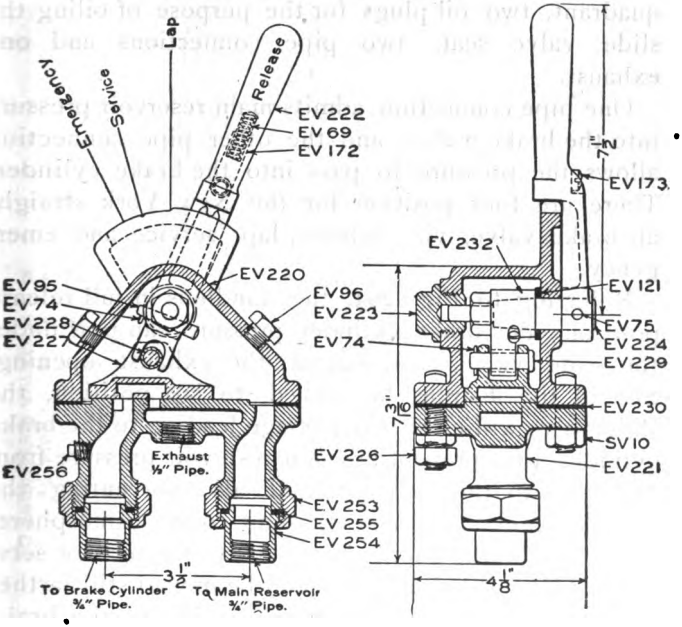

FIGURE 263

NEW YORK STRAIGHT AIR ENGINEER'S BRAKE VALVE

tender brakes independent of the triple valve when the triple is in release position.

The New York straight air equipment consists of a straight air brake valve, a reducing valve, a double check valve, a brake cylinder guauge, and a safety valve on the brake cylinder, the same as is used in

the Westinghouse system, but the New York straight air valve is modeled after their engineer's automatic brake valve, as it will be seen by reference to the cut, Fig. 263, illustrating the straight air valve, that the essential parts of this valve (aside from the case), are a slide valve operated by a handle working over a quadrant, two oil plugs for the purpose of oiling the slide valve seat, two pipe connections and one exhaust.

One pipe connection admits main reservoir pressure into the brake valve, and the other pipe connection allows the pressure to pass into the brake cylinder. There are four position for the New York straight air brake valve, viz.: release, lap, service and emergency.

Referring to Fig: 263, the handle is in full release position, and brake cylinder pressure can pass under the slide valve, and out at the exhaust opening. Should the handle be moved to lap position, the slide valve will close the passage leading to the brake cylinder, thus preventing main reservoir pressure from getting into the cylinder, and also preventing the cylinder pressure from escaping to the atmosphere. Now, should the handle be moved to the next or service position the slide valve will be moved still farther back, thereby creating a small opening to the brake cylinder, and allowing the engine brakes to be set gradually, but should the handle be thrown to emergency position, the slide valve will be moved to such a position that the passage to the brake cylinder is wide open, thus allowing a quick and free rush of air into the cylinders. Between the main reservoir and the straight air brake valve there is a reducing valve, Fig. 264, for the purpose of keeping the main reservoir

pressure down to a predetermined standard which is usually forty-five pounds.

This straight air reducing valve is connected at one end to the main reservoir, and at the other end to the straight air brake valve, and as the regulating

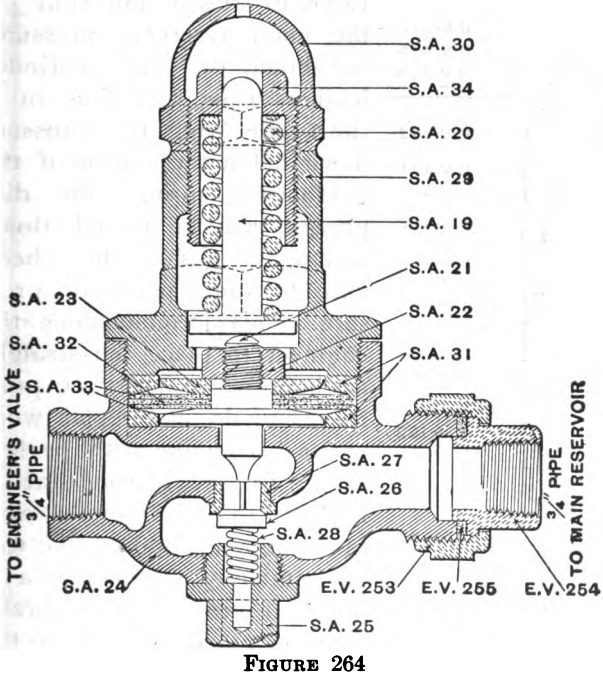

FIGURE 264

NEW YORK STRAIGHT AIR BRAKE PRESSURE REDUCING VALVE

spring is supposed to be adjusted to forty-five pounds, it will readily be seen by reference to Fig. 264, that the force of the spring will drive the diaphragm down so that it will unseat the check valve 26. Therefore, when no air is in the brake cylinder, the main reservoir pressure can pass by the check valve, and out

through the pipe connection leading to the straight air brake valve, and when the pressure under the diaphragm becomes a fraction greater than that for which the regulating spring 20 is adjusted, the diaphragm will be moved up, thereby allowing the check valve to reseat and shut off the main reservoir pressure, but should the brake cylinder leathers leak, and thus in a short time bring the pressure down below the tension of the graduating spring, the diaphragm will be forced down and again unseat the check valve to admit main air pressure. This action enables the engineer to place the straight air brake valve in service position, and do any repair work under his engine with perfect safety, for the reason that as long as the air pump works, the straight air brake valve will automatically supply main reservoir pressure to the brake cylinders, and thus keep the engine from moving. One of the greatest benefits that the straight air brake valve confers in road service is, that it enables the engineer to set the engine brakes independently of the train brakes, so that in slowing down, or in making a stop, he can keep the train bunched, and thereby prevent a break-in-two. The safety valve, Fig. 265, on the brake cylinders, is for

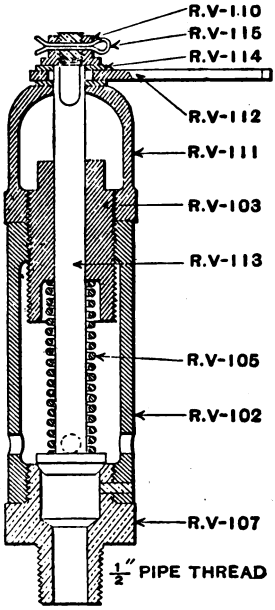

FIGURE 265
NEW YORK SAFETY VALVE WITH HAND RELEASE

duc-
cing
alize
r to
rake
ight
blow

ieral
com-
arly
It
rake
pipe
ame
the
ipe,
s for
/lin-
of a
from
dia-
so a
ame
the
e of
the
der.
bso-
en-
uced
also
en-
ided

the purpose of taking care of any leakage in the reducing valve. Should the check valve in the reducing valve leak, the main reservoir pressure would equalize with the brake cylinder pressure, and in order to prevent this a safety valve is placed on the brake cylinder, to allow any extra pressure that might accumulate in the cylinder to automatically blow out.

The diagram, Plate 35, which illustrates the general arrangement and method of piping the New York combined automatic and straight air brake will clearly show the relative positions of the several parts. It will be noticed that in the pipe that leads to the brake cylinders there is a safety valve. In this same pipe there is also a double check valve, which is the same as is used in the Westinghouse system. From the brake pipe there is shown in dotted lines another pipe, on the end of which there is a cock. This cock is for the purpose of releasing the air from the brake cylinders when descending heavy grades, or, in case of a bursted hose, thereby saving the engine tires from being skidded or loosened. By reference to the diagram it will be seen that on the tender there is also a safety valve, a double check valve, and the same line of pipe in dotted lines has a release cock on the end of it, similar to the engine equipment. One of these release cocks is located in the cab, and the other one is placed in the gangway of the tender. The descending of long heavy grades makes it absolutely necessary to have some means by which the engine and tender brake cylinder pressures can be reduced without having to release the train brakes. It is also a very important matter to be able to release the engine and tender brakes when a hose bursts, provided

it is desired to save the engine tires from becoming loosened or flattened

Questions

752. What is the principal difference between the Westinghouse system of air brakes and the New York system?

753. What type of air pump is employed in the New York system?

754. What is a duplex air pump?

755. Are the two air cylinders of the same internal diameter?

756. Explain the action of the air end of a duplex air pump.

757. Is it proper to consider it a compound pump?

758. How many sizes of New York duplex air pumps are being made?

759. How are the different sizes designated?

760. What are the dimensions of the No. 1 pump?

761. What are the dimensions of the No. 2 pump?

762. What are the dimensions of the No. 6 pump?

763. What are the dimensions of the No. 5 pump?

764. Explain the action of the New York duplex air pump.

765. How is the reversing valve for each piston controlled?

766. In what respect does the reversing mechanism of the New York air pump resemble the Westinghouse?

767. Explain in a simple manner the operation of the reversing mechanism of the New York duplex air pump.

768. What moves the reversing rod that extends up in the hollow steam piston rod?

769. What is the function of the slide valve in this reversing mechanism?

770. Are there any packing rings on the reversing valve?

771. What precautions should be observed regarding oil in the slide valve chamber of this pump?

772. What is the result if too much oil is allowed to get into the slide valve chamber?

773. What should be done with the drain pipe at the bottom of the steam end?

774. With the exception of Nos. 6 and 5, how many valves are in the air end?

775. What are the functions of these valves?

776. How are these valves located on the Nos. 1 and 2 pumps?

777. How many air valves are there in the No. 6 and No. 5 pumps?

778. Why are the intermediate valves so designated?

779. Describe the action of the air valves in the No. 1 and No. 2 pumps.

780. In starting the pump which piston starts first?

781. After both pistons have completed the first stroke what is the pressure of air in the cylinders?

782. As the low-pressure piston moves on the return stroke, what becomes of the air ahead of it contained in the low-pressure cylinder?

783. What is the ratio of the volume of the high and low-pressure cylinders?

784. When the low pressure piston has completed the return stroke how many volumes of air will the high-pressure cylinder contain?

785. As the high pressure piston moves on the return stroke what becomes of the air ahead of it in the high-pressure cylinder?

786. In addition to being a duplex pump what other type of pump is the New York air pump?

787. Is there an air inlet for each air cylinder?

788. Give a short description of the No. 1 automatic oil cup for Westinghouse air pumps.

789. Describe the action of this cup.

790. How is the No. 2 Westinghouse oil cup constructed?

791. Describe its operation.

792. How is the oil contained in these cups kept in a liquid state in cold weather?

793. In how many styles is the New York automatic oil cup made?

794. Describe Style "A."

795. How does this cup operate to feed the oil into the cylinder?

796. Describe style "B" cup and the method by which it introduces oil into the cylinder.

797. In what respects does the New York air pump governor resemble the Westinghouse?

798. In what respects do the two pumps differ?

799. How does the back pressure steam escape from the steam piston chamber?

800. If this pressure were not allowed to escape what would be the result?

801. How is the regulating spring set in the old style "A" New York governor?

802. Of what parts does a duplex pump governor consist?

803. In studying the New York engineer's brake valve what should be remembered regarding the first escapes of air when a service application is made?

804. In making a service application with the Westinghouse valve where does the air first escape from?

805. How many positions are there for the handle of the New York engineer's brake valve in making a service application of the brakes?

806. With a light train of four cars or less how should the application be commenced?

807. What would be the probable result if the handle were moved past the first notch with a light train?

808. What are the essential parts of the New York engineer's brake valve?

809. How many and what are the pipe connections to the engineer's brake valve?

810. In what position is the handle shown in Fig. 249?

811. What should be remembered in studying this view of the face of the main slide valve?

812. What is the function of port "A" in the valve seat?

813. What controls port "A"?

814. When the valve is in full release position, as in Fig. 249, how is port "F" closed?

815. When the valve is in running position what closes port "F"?

816. How many cavities has the main slide valve?

817. How many parts are there in the main slide valve?

818. How many parts are there in the main valve seat?

819. When the main slide valve is moved to full release position what is the course of main reservoir air?

820. Describe the route of main reservoir air when the handle is in running position?

821. How does the air get into the pump governor pipe?

822. What ports are closed in lap position, Fig. 251?

823. Describe the condition of the ports and air passages when the valve is in service graduating position, Fig. 252.

824. With the valve in service graduating position what function does the main slide valve perform?

825. What would be the result if the top end of port "O" were not thus closed?

826. If the handle be now moved to another service graduating position what will take place?

827. Does this action continue in each of the service graduating notches?

828. Does the valve automatically lap itself when the handle is thrown to emergency position?

829. Why not?

830. When the handle is in emergency position what are the port connections?

831. What effect does this have on the triple valves in the train?

832. When the handle is thrown from emergency position or service or lap position back to full release how is the equalizing piston affected?

833. How does this action affect the vent valve 180 in the end of the piston 104?

834. Why is this?

835. What is the primary purpose of port "E" in the slide valve and cavity in the main slide valve?

836. What is the function of chamber "E"?

837. What are ports "F" and "G" in the main slide valve for?

838. What are ports "J" and "K" primarily used for?

839. What is the function of passage "C"?

840. For what purpose is cavity "P"?

841. What is port "N" in the main valve for?

842. Describe the route of passage "O."

843. Describe the route of passage "H."

844. What is the function of the small ball valve 184 in the equalizing piston?

845. What is the purpose of the vent valve in the end of the equalizing piston?

846. What is the purpose of port "O"?

847. What is the function of the excess pressnre valve 97? When the handle is in extreme forward position how does the air get into the trainpipe? How is the first notch indicated and what position is this?

848. With the handle in running position how is main reservoir pressure fed into the trainpipe?

849. What position is the next notch on the quadrant?

850. What are the conditions when the handle is in this position?

851. Why is a duplex pump governor a necessity with the New York air brake?

852. What position is the next notch after positive lap position?

853. How many pounds of trainpipe pressure is allowed to exhaust with the handle in this position?

854. With the handle at the fifth notch or full service position, how many pounds reduction is there in trainpipe pressure?

855. If while the handle is in the five-pound notch, leakages should occur in the trainpipe causing the pressure to be reduced to sixty pounds or less, what would be the result if the handle were moved to the eight-pound notch?

856. What can be said of this feature?

857. Upon what is the automatic lap feature dependent?

858. What conditions would tend to prevent the equalizing piston from moving forward and causing the valve to lap?

859. Mention other causes that would prevent the automatic lap?

860. What are the two cap screws in the cover of the brake valve for?

861. How is the slide valve oiled?

862. What should be done with the excess pressure valve when the air pressure is off?

863. How is the regulating spring of the excess pressure valve regulated?

864. If the black hand of the gauge begins to move before the red hand reaches the twenty-pound point what is indicated?

865. If the black hand does not move until the red hand has passed the twenty-pound mark, what should be done?

866. With the handle in the second graduating notch how many pounds of trainpipe pressure will exhaust before the valve will automatically lap?

867. How many pounds will be exhausted with the handle in the third notch?

868. How many pounds reduction in trainpipe pressure will result with the handle in the fourth notch?

869. What are the principal operating parts of the New York quick-action triple valve?

870 How does trainpipe pressure get between the pistons?

871. What is the function of this air cushion?

872. Describe the passage of the air through the New York quick action triple valve.

873. What must be the conditions before the equipment is ready for an application of the brakes?

874. How is the movement of the main triple piston graduated?

875. What causes the non-return check valve to go to its seat and stay there?

876. What are the functions of the New York combined automatic and straight air brake valve?

877. What factors go to make up the New York straight air equipment?

878. What is the difference between the New York brake valve, and the Westinghouse brake valve, as regards excess pressure?

879. What is the difference between the old style A New York brake valve and the present styles B and B-1?

880. What are the conditions when the handle is thrown into emergency position?

881. Where is the reducing valve located?

882. How is the supply port from the auxiliary reservoir to the brake cylinder opened?

883. How is the exhaust port from the brake cylinder to the atmosphere closed?

884. How is the port from the auxiliary reservoir to the brake cylinder closed?

885. How is the emergency action of this valve brought about?

886. How is auxiliary pressure caused to equalize with brake cylinder pressure?

887. What advantage does this action afford to the engineer?

888. Why are there two pipe connections?

889. How many positions are there for the New York straight air brake valve?

890. Name these positions.

891. With the handle in full release position, what occurs?

892. What are the conditions with the handle in lap position?

893. If now the handle be moved to the next or service position, what will occur?

894. What is the purpose of the reducing valve?

895. How is the straight air reducing valve connected?

896. To what pressure is the regulating spring adjusted?

897. When there is no air pressure in the brake cylinder what is the route of the main reservoir pressure?

898. When the pressure under the diaphragm becomes slightly greater than the tension of the regulating spring what will take place?

899. What would be the consequence if the brake cylinder leathers should leak?

900. What is one of the greatest benefits to be derived from the use of the straight air brake valve in road service?

901. What is the function of the safety valve on the brake cylinder?

902. For what purpose are the release cocks?

903. Where are the release air cocks located on the engine?

B2 H. S. EQUIPMENT—NEW YORK AIR BRAKE.

The locomotive brake equipment described and illustrated herewith is known as the B2-HS equipment and is arranged in three different schedules to cover the requirements of railroad service in general.

Schedule B2 covers the single pressure system, B2-HP the double pressure system, and B2-HS the double pressure system with high speed attachment such as shown herewith.

The equipment differs materially from any schedule heretofore furnished. As with the Combined Automatic and Straight Air Brake, the independent brake valve has been dispensed with, and by the addition of the Duplex Pressure Controller and Accelerator Valve, more has been accomplished than was heretofore possible, and with less apparatus.

With this equipment the train brakes can be released, and the locomotive brakes held on. The locomotive brakes can then be released when desired, or can be applied and released independently of the train brakes, or together with same at the option of the engineer.

The locomotive brakes can be operated at all times by automatic or independent application, and without regard to position of the locomotive in a train, whether used as a helper, coupled to another or assigned to any other part of train. They can be applied and released at will, and can be graduated off after an application of the train brakes; therefore, in all kinds of service the train brakes can be handled without shock to the train.

The accelerator valve will be found a valuable addition to these equipments when operating long trains, for, with the use of same, shorter stops will be effected, and a more uniform application of the train brakes obtained.

All excess pressure is confined to the main reservoir, and in no position of the brake valve handle can the brake pipe pressure increase above its maximum. This will prevent over-charging of auxiliary reservoirs on the head end of trains, and also reduce the strain on air brake hose.

B2 EQUIPMENT.

This equipment is designed for passenger or freight service where but one brake pipe pressure is used.

Both pump governor and pressure controller have single regulating heads. The pressure head for the pressure controller should be adjusted to 70 lbs. for brake pipe pressure, and the pump governor head adjusted to 90 lbs. for main reservoir pressure.

B2-S EQUIPMENT.

This equipment is for use with switch engines as before stated. A single pump governor is provided, also a single pressure controller for brake pipe pressure regulation. In the pipe connecting the regulating and supply portions of the pressure controller is located cut-out cock No. 2. When this cock is open the controller should give a maximum brake pipe pressure of 70 lbs. and the pump governor adjusted to 110 lbs. for main reservoir pressure. This will give the necessary air pressure for freight service. By closing the cut-out cock the pressure

controller will become inoperative, allowing the main reservoir pressure of 110 lbs. to pass to the brake valve, and brake pipe for high speed service.

B2-HP EQUIPMENT.

This equipment is for use in freight service only. Both regulating portions of the pump governor and pressure controller are duplex, so that pressures of 70 and 90 lbs. can be carried in the brake pipe and 90 and 110 lbs. in the main reservoir for the ordinary brake pipe pressure and the high pressure control.

For the operation of these duplex regulating portions, three way cocks are provided, being connected as shown in the piping diagram.

To operate these cocks turn the handle in line with the pipe leading to the regulating head to be used, high or low pressure as desired. This will cut in the head to regulate the supply portion, and cut off the one not in use.

B2-HS EQUIPMENT.

High speed locomotive brake equipment. The system of regulation of pressure for the high speed equipment is the same as with the B2-HP except that the regulating heads of the pressure controller should be adjusted to 70 and 110 lbs. for brake pipe pressure, and the pump governor heads adjusted to 90 and 120 or 130 lbs. as desired for main reservoir pressure.

MANIPULATION.

On the folded sheet (Plate 36) will be found piping diagrams of the several B-2 equipments, and it should be referred to in connection with the following instructions:

GENERAL.

To apply the locomotive and train brakes (automatic), move the handle of the brake valve to the graduating notch necessary to make the required brake pipe reduction.

To release both locomotive and train brakes, move the handle to Running and Straight Air release position.

To release the train brakes and hold the locomotive brakes set (Straight Air), move the handle to Full Automatic release and Straight Air application position.

To release the locomotive brakes, move the handle to Running and Straight Air release position.

To apply the locomotive brakes (Straight Air), move the handle to Full Automatic release and Straight Air application position.

To apply the brakes in an emergency, move the handle quickly to Emergency position, and leave it there until the train stops, or the danger has passed.

In case the automatic brakes are applied by the bursting of a hose, the train parts, or a conductor's valve is opened, place the handle in Lap position to retain the main reservoir pressure.

To graduate off or entirely release the locomotive brakes after an application of the train brakes, use the lever safety valve to make the required reduction.

to work
the main
ipe pres-

pressure
observed

n a train
e turned
le carried
all loco-
are oper-

Straight
ocated in
and the

out cock
le Valve

riple and
will re-
d can be
ig grades

y are of
lrain the
the latter

the sup-
ls except

Cut-out cocks 5, 6 and 7 are recommended with this equipment.

tne governor.

The straight air controller is to limit the pressure in

The handle of the brake valve will be found to work freely and easily at all times, as the pressure on the main slide valve does not exceed the maximum brake pipe pressure.

The cylinder gauge will show at all times the pressure in the locomotive brake cylinders, and should be observed in all brake manipulations.

Where there are two or more locomotives in a train cut-out cock No. 1, shown in plate 36, should be turned to close the brake pipe, and the brake valve handle carried in Running and Straight Air release position on all locomotives, except the one from which the brakes are operated.

In case it becomes necessary to cut out the Straight Air brake, close cut-out cock No. 3 which is located in the straight air pipe between the Brake Valve and the Reducing Valve.

To cut out the Automatic Brake, close cut-out cock No. 6 located in the pipe connecting the Triple Valve with the Double Check Valve.

By locating the cut-out cock between the Triple and Double Check Valves, the auxiliary reservoirs will remain charged, while the brake is cut out, and can be alternated with the train brakes in descending long grades to prevent overheating of the locomotive tires.

Cut-out cocks Nos. 3 and 6 are special, they are of the three-way pattern, and when turned off drain the pipes leading to the double check valve to keep the latter seated in the direction of the closed cock.

The main reservoir cock No. 4 is to cut off the supply of air when removing any of the apparatus except the governor.

The straight air controller is to limit the pressure in

the driver, truck and tender brake cylinders for the straight air brake, and should be adjusted to 40 pounds pressure.

Cut-out cocks Nos. 5, 6 and 7 are recommended when truck brake is used, their purpose being fully understood. Nos. 9 and 10 can be added, if desired, so that the driver brake cylinders and reservoir can be cut out, and engine truck brake operated by truck brake reservoir.

THE B2 BRAKE VALVE.

This brake valve, although modeled somewhat upon the principles of the B and B1 valves, is necessarily different in detail so as to embody the features of the pressure controller and those of the united straight air. Fig. 266 is a photographic view of the valve. Fig. 267 is a

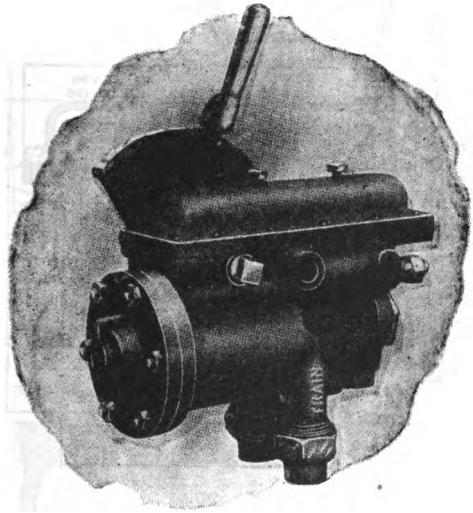

Fig. 266. B-2 Brake Valve.

longitudinal side section showing travel of main slide valve EV 194 and how the graduating valve EV 110 is controlled by the piston EV 193. This view also shows the different positions of the brake valve handle. Fig. 268 is a top view of the valve with the cover, slide valve

and handle removed, showing seat and connections for the straight air and divided reservoir pipes. Fig. 269 is a cross section through the valve (rear view). Fig. 270 is a cross section through the main slide valve. Fig. 271 shows the face of the main slide valve.

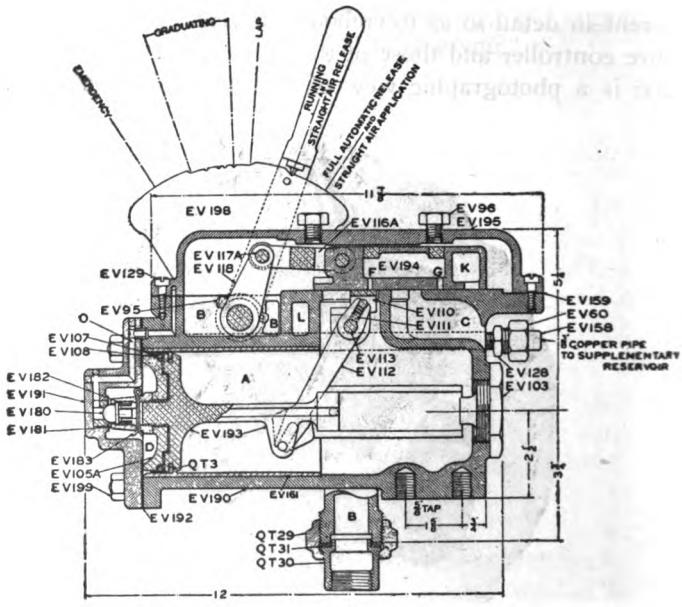

Fig. 267.

The main reservoir pipe is connected from the pressure controller to chamber B (Fig. 267) in the top of the valve. The brake pipe is connected to chamber A. Discharge of brake pipe air to the atmosphere for service applications occurs through ports F and G in the main slide valve and exhaust passage C in the valve body and for emergency applications through ports J and K in

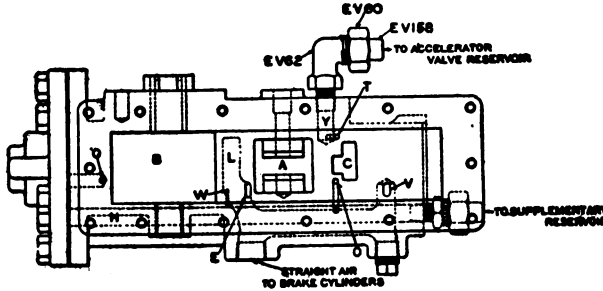

Fig. 268.

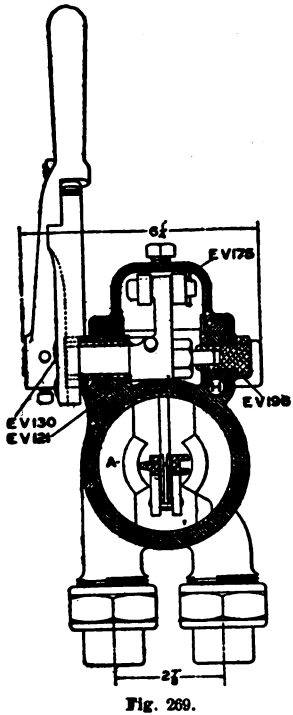

Fig. 269.

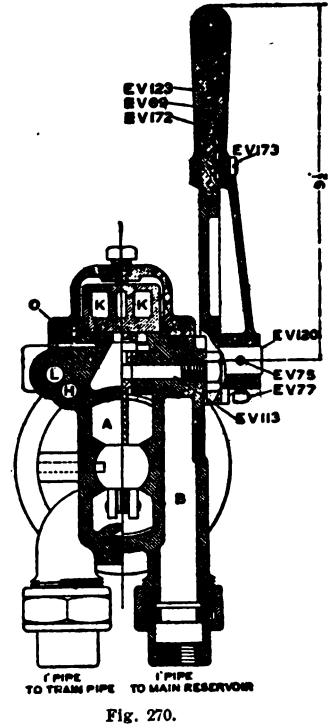

Fig. 270.

the slide valve (Fig. 271) and exhaust passage C. The main slide valve also controls the flow of air from the main reservoir to the brake pipe. In Full automatic release position air is free to pass from the main reservoir to the brake pipe through ports M and also around the slide valve, as in this position the slide valve is moved forward, uncovering a portion of the passage. (See Fig. 272.) When the handle is in Running position only ports M are open but are of a size to promptly release all train brakes. (See Fig. 273.)

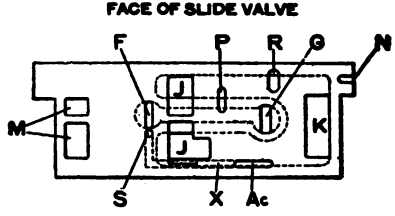

Fig. 271.

Small slide valve EV 110 is a cut-off or graduating valve, operated by piston EV 193, and lever EV 112. In service applications it automatically laps port F, and stops the discharge of brake pipe air when the brake pipe reduction, corresponding to the service graduating notch in which the handle is placed, has been made. Piston EV 193, which is exposed on one side to brake pipe pressure (Chamber A) and on the other to Chamber D, and supplementary reservoir pressure, through the agency of lever EV 112 causes valve EV 110 to move automatically whatever distance is necessary to close port F.

Passage H (Figs. 267 and 269) runs lengthwise to the valve, one end leading to the supplementary reservoir

as indicated in Fig. 267, while the other end leads to the space D, back of the piston EV 193. In Full automatic release, and in Running and Straight Air release positions, air from chamber B, Fig. 268, passes through port W to passage H and supplementary reservoir, until there is equal pressure on both sides of the piston EV 193 and the supplementary reservoir pressure is equal to the brake pipe pressure.

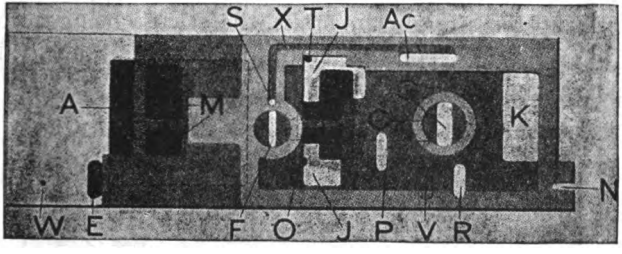

Fig. 272. Release Position.

Port O (Fig. 267), is used to return the piston EV 193 to its normal position when releasing the brakes, and is open to the exhaust passage C when the handle of the brake valve is in Full Automatic Release, Running, and Lap positions, and closes just before the handle is brought to the first graduating notch. During the time the brake valve handle is in any of these positions, port O is open through passage C to the atmosphere, as stated, and if it were not for the vent valve EV 180 the function of piston EV 193 would be destroyed, as a continual blow from chamber D would result while the piston EV 193 is in operation the vent valve EV 180 is away from its seat, thus opening port O to the slide valve

seat, to be opened when the handle is again returned to release position.

Connection is made with the straight air pipe through passage L (See Figs. 268 and 272) to which ports E and V connect from the main slide valve seat. Port E is the admission port and is open to receive pressure from chamber B when the handle of the brake valve is in Full automatic release and Straight Air application position. Port V is the exhaust port and is used to exhaust the pressure from the driver brake cylinders in releasing the straight air brake, the release being accomplished through ports R and J in the main slide valve, and passage C in the valve body. (See Fig. 273.)

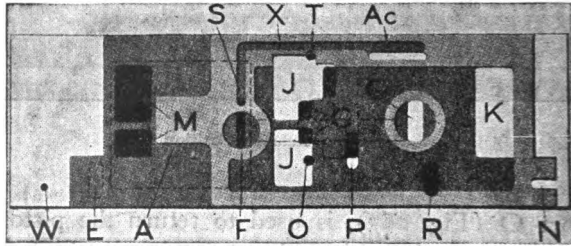

Fig. 273. Running Position.

Port V is also used to pass pressure from chamber B to the straight air brake when the handle is in the Fifth graduating notch and Emergency position. This is done so that if there is cylinder leakage or excessive piston travel, the Straight Air brake will hold the pressure in these cylinders to the adjustment of the Reducing Valve.

In all graduating positions of the Brake Valve, brake pipe pressure is admitted to the divided reservoir (Large compartment Fig. 279) to operate the Accelerator Valve.

When the Brake Valve handle is moved to any of the graduating notches, brake pipe pressure will flow through port S, passage X, and cavity AC in the main slide valve (Fig. 271) and through port T, and passage Y in the Valve body (Fig. 268) to the divided reservoir until the port S is cut off by the Graduating Valve EV 110, when the latter closes the service port F. To guard against possibility of the Accelerator Valve being open while the Brake Valve handle is in a Release position, which might occur if the handle was returned before a service application had been completed, port J in the main slide valve (Fig. 271) has been enlarged so as to open port T to the exhaust passage C, and the atmosphere when the handle is in a release position. These ports are large enough to rapidly discharge the air accumulated in the divided reservoir, and thereby permit the accelerator valve to immediately close. By referring to the diagrammatic views of the main slide valve and seat shown in Figs. 272 to 277 inclusive, it will be seen what ports are open and closed in the different positions of the slide valve.

FULL AUTOMATIC RELEASE AND STRAIGHT AIR APPLICATION POSITION (FIG. 272).

The purpose of this position is to promptly release the automatic brakes and to apply the straight air brakes on the Locomotive. In this position, air is flowing directly from chamber B (main reservoir) into chamber A (brake pipe) past the end of the slide valve and through ports M. Port O is open to port J and exhaust passage C to return the piston EV 193, and port W is open to charge the supplementary reservoir. Port T, also by means of

port J, is open to the exhaust passage C to discharge the pressure from the large compartment of the divided reservoir. Port E is also open for pressure to pass to the driver brake cylinders through the straight air pipe until shut off by the reducing valve.

RUNNING POSITION.

RUNNING AND STRAIGHT AIR RELEASE POSITION. (Fig. 273.) This is the proper position of the handle when wishing to release both Straight Air and Automatic brakes simultaneously, or to release the Straight Air Brake. Connection from Chamber B into Chamber A

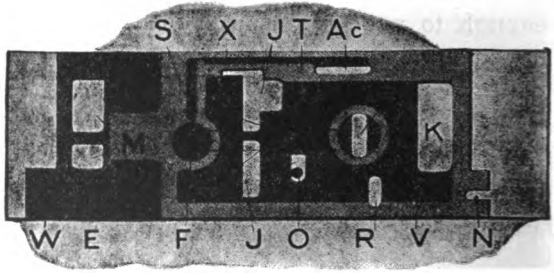

Fig. 274. Lap Position.

is made through the ports M. Port E is lapped. Ports O, T and W remain the same as in Release Position. Ports R and V register with each other, thus connecting the straight air brake with the exhaust passage C as shown, to discharge the pressure from the driver brake cylinders.

LAP POSITION. (Fig. 274.) This position should be used in case a hose bursts, the train parts or a conductor's valve is opened, to save the main reservoir pres-

sure. In this position all ports are blanked, excepting port O. As in Release and Running Positions, this port is open to the exhaust passage C. In this particular position cavity P in the slide valve seat is made use of to connect the port with passage C.

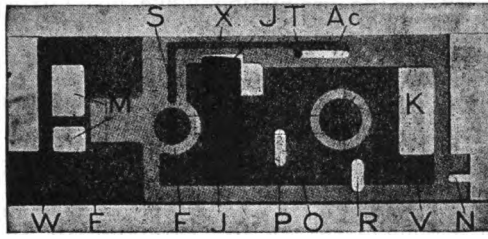

Fig. 275. First Graduating Position.

GRADUATING POSITIONS. (Figs 275 and 276.) These positions give a gradual reduction of brake pipe pressure for service applications. In Fig. 275 ports M are

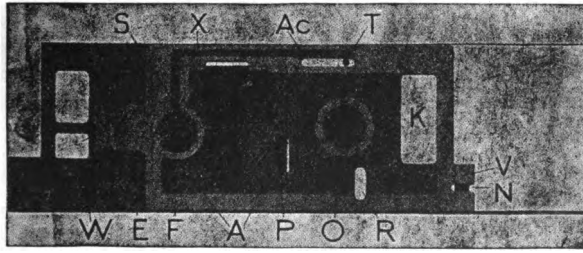

Fig. 276. Last Graduating Position.

blanked and communication from the main reservoir to the brake pipe is cut off. The straight air ports E and V are also blanked, as well as ports O and W, which are cut off just before the handle reaches the First Graduat-

ing Notch. Ports F and G are open to the exhaust passage C, and port S is open through passage X to port T to receive pressure from the brake pipe and pass it to the divided reservoir to operate the Accelerator Valve. Ports F and S will remain open to receive brake pipe pressure until cut off by the graduating valve EV 110 when the service reduction has been made.

In the remainder of the Graduating Positions, the relation of ports remains the same with the exception of the restricted passage N (Fig 276) in the end of the slide valve which in the Fifth Graduating notch is over the straight air port V, and should there be excessive piston travel or cylinder leakage the Straight Air equipment will hold the pressure in these cylinders to the adjustment of the reducing valve. The restriction of port N is to prevent the pressure from passing to the driver brake cylinders in advance of pressure from the auxiliary reservoir of the automatic brake.

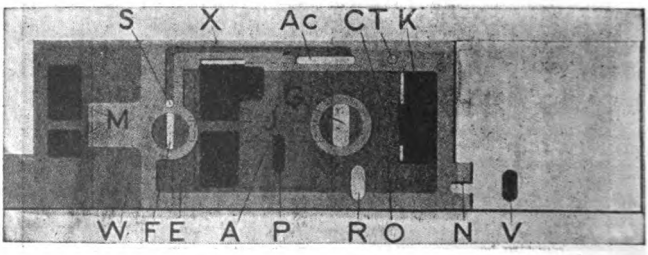

Fig. 277. Emergency Position.

EMERGENCY POSITION (FIG. 277).

This position is to be used when it is desired to apply the brakes to their quickest and fullest capacity. In this position, the active ports are J and K, which are open to exhaust brake pipe pressure from chamber A to the

atmosphere. Port V as in the fifth graduating notch is open to maintain the pressure in the driver brake cylinders against leakage, etc. Port E is closed, also ports F, M, O, S, T and W.

To dismantle the Valve, the valve cover EV 195 should first be removed, and then the back cap EV 191. The main slide valve EV 194 should be taken off, and the Graduating valve EV 110 lifted out—also the Graduating valve spring EV 111. Next remove the fulcrum pin EV 113, after which remove the piston EV 193.

Do not attempt to remove the follower cap nut EV 181 from the piston EV 193 while the piston is in the valve body, as to do this would probably result either in springing the groove in the piston stem, or in breaking off the dowel pin in the valve body.

Figs. 267 to 270 show the different parts of the valve, their names being as follows: EV 60, Small union nut; EV 62, Small union ell; EV 69, Handle spring; EV 75, Handle pin; EV 77, Handle set screw; EV 95, Lever shaft pin with cotter; EV 96, ¼" plug; EV 103, End plug; EV 105-A, Follower; EV 107, Packing Leather; EV 108, Expander; EV 110, Graduating Valve; EV 111, Graduating valve spring; EV 112, Graduating valve lever; EV 113, Fulcrum pin; EV 116-A, Link; EV 117-A Link pin; EV 118, Slide valve lever; EV 120, Lever shaft; EV 121, Lever shaft packing; EV 123, Handle; EV 128, Small union stud; EV 129, Cover screw; EV 130, Quadrant screw; EV 158, Small union swivel; EV 159, Cover gasket; EV 172, Latch; EV 173, Latch screw; EV 175, Link pin cotter; EV 180, Vent valve; EV 181, Follower cap nut; EV 182, Vent valve spring; EV 183, Piston cotter; EV 190, Body; EV 191, Back cap; EV 192, Cap gasket; EV 193, Piston; EV 194, Main slide valve;

EV 195, Valve cover; EV 196, Lever shaft plug; EV 198, Quadrant; EV 199, Back cap stud and nut; QT 3, Piston ring; QT 29, 1″ Union nut; QT 30, 1″ Union swivel; QT 31, 1″ Union gasket.

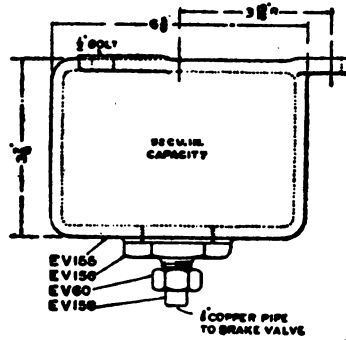

Fig. 278.

SUPPLEMENTARY RESERVOIR USED WITH SWITCH ENGINE EQUIPMENT, SCHEDULE B2-S (FIG. 278).

NAMES OF PARTS.

EV 60, Small union nut; EV 155, Supplementary reservoir; EV 156, Reservoir plug; EV 158, Union swivel (⅜″ copper pipe).

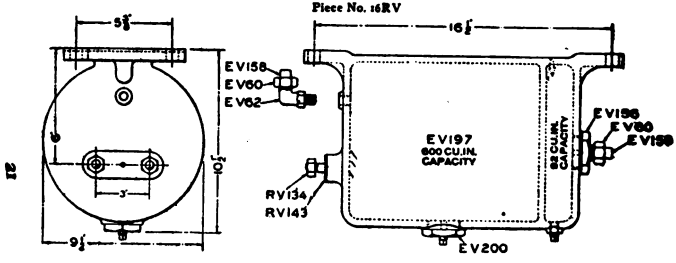

Fig. 279. Divided Reservoir.

E V 60—Small union nut.
E V 62—Small union ell.
E V 156—Reservoir plug.
E V 158—Union swivel.
E V 197—Divided reservoir.
E V 200—Botton plug.
R V 134—½-inch stud and nut.
R V 143—Accelerator valve gasket.

THE DUPLEX PRESSURE CONTROLLER AND DOUBLE PRESSURE SYSTEM.

This valve, in reality, is a part of the Brake Valve, taking place of the excess pressure or feed valve, and is connected in the main reservoir pipe near the Brake Valve, to control the brake pipe pressure. The Con-

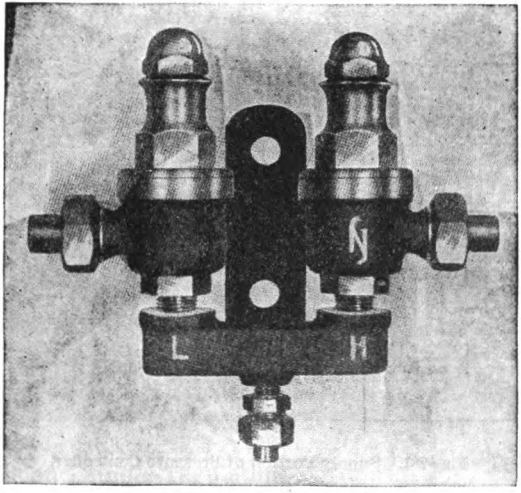

Fig. 280. Duplex Regulating Portion of Pressure Controller.

troller is in principle the same as that of a Duplex Pump Governor with the exception of the regulating tops, which connect to the brake pipe. In no position of the Brake Valve handle is there danger of the brake

pipe becoming over-charged, or equal to that in the main reservoir.

This equipment is designed so that two pressures may be carried in the brake pipe, and also in the main reservoir. It will be seen by reference to the piping diagram that there is a union three-way cock, from which pipes lead to the regulating tops, and supply which in this case is brake pipe pressure. The same arrange-

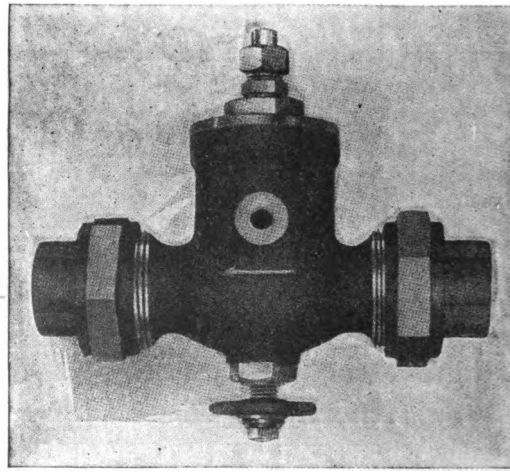

Fig. 281. Supply Portion of Pressure Controller.

ment also applies to the pump governor. A sectional view of this cock is shown in Figs 284 and 285. When one regulating top is cut in the other one is cut out and vice versa. This is done to relieve the strain on the regulating tops when not working. When the cocks are in the position shown in the piping diagram the low pressure regulating tops of the Controller and Duplex Pump

Governor are cut in, giving a pressure of seventy pounds to the brake pipe, and ninety pounds to the main reservoir. When the cocks are reversed, one hundred and ten pounds will then be carried in the brake pipe, and one hundred and thirty pounds in the main reservoir.

Fig. 280 is a photographic view of the Duplex Pressure controller, and Fig. 281 is a view of the supply portion. Figs. 282 and 283 are sectional views of both the

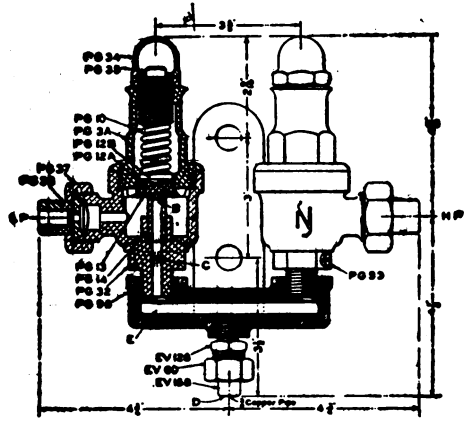

Fig. 282.

duplex and single regulating portions. Fig. 286 shows the supply portion in section. Referring to Fig. 286, connection is made with the main reservoir at M. R. and by means of the cored passage, air is free to pass to the under side of the valve P G 95. Connection BV leads to the brake valve, main reservoir connection, and connection D to the regulating portion (single or duplex) also connecting at D in Figs. 282 and 283.

In operation with either a single or duplex regulat-

ing portion, as soon as the pressure in the brake pipe is great enough to overcome the resistance of the spring PG 10 which is holding the diaphragm PG 13 seated over port B, the pressure will pass through passage E to connection D, and by piping to the space E in the supply portion of the controller above the piston PG 4, forcing the piston, and valve PG 95 down until seated, cutting off communication between main reservoir and brake pipe.

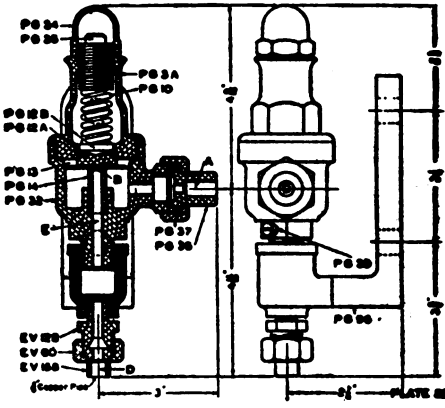

Fig. 283.

As soon as the pressure falls in the brake pipe below the adjustment of spring PG 10, the latter will force diaphragm PG 13 to its seat, closing off port B, whereupon pressure in passage E, and piping connecting supply and regulating portions, and space E above piston PG 4 will immediately escape to the atmosphere through the small port C in the regulating head of the controller, after which main reservoir pressure will lift valve PG 95 off its seat, and again open communication to the brake pipe.

Port X in the supply portion of the controller connects the under side of piston PG 4 with atmosphere, so that it will be free to operate and to discharge any leakage by the ring PG 24 or valve PG 95.

The regulating portions are provided with brackets so that they can be attached to the cab in some convenient place where they will be handy for adjustment. The adjustment of these regulating heads is accomplished by means of nut PG 35 which regulates the tension of spring PG 10.

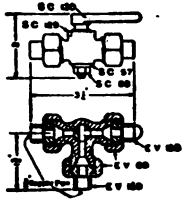

Fig. 284.

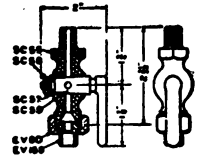

Fig. 285.

Each regulating head has a vent port C, and to avoid any unnecessary waste of air, one of these heads should be plugged with screw PG 33. The cut-out cock shown in Fig. 285 is used with the B2S equipment, between the regulating and supply portions. When this cock is closed the supply portion of the controller is cut off.

The hand wheel PG 45 can be used in descending grades if desired, to increase the brake pipe pressure to that of the main reservoir. By screwing the wheel up, it will lift the valve PG 95 off its seat and thus allow the two pressures to become equal. The Controller will then be inoperative, and main reservoir pressure will be free to pass to the brake pipe until the Controller is again restored to its operative condition.

The names of parts of the regulating portion are: PG 3A Spring Casing; PG 10 Regulating Spring; PG 12A and B Diaphragm button; PG 13 Diaphragm; PG 14 Air valve seat; PG 32 Diaphragm body; PG 33 Vent plug; PG 34 Cap; PG 35 Regulating nut; PG 36 Air union swivel (⅜" copper pipe); PG 37 Air union nut; PG 98 Duplex bracket; EV 60 Small union nut; EV 128 Small union stud; EV 158 small union swivel (⅜" copper pipe). The parts of the three-way cock are: SC 57 Washer; SC 58 Nut; SC 129 Body; SC 130 Plug; EV 60 Small union nut; EV 158 Union Swivel (⅜" copper pipe).

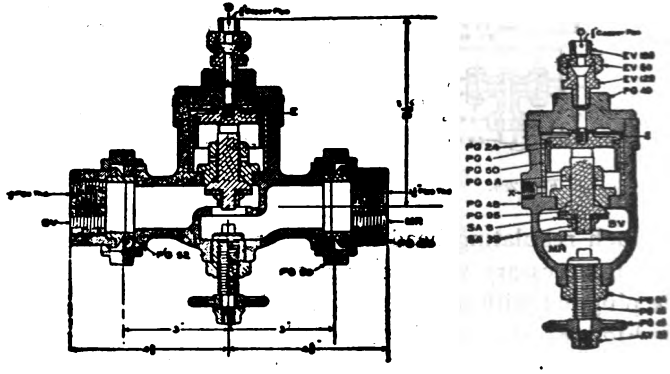

Fig. 286.

The parts of the supply portion are: PG 4 Piston; PG 6A Valve guide; PG 24 Piston ring; PG 45 Hand wheel; PG 46 Lifting Stem; PG 48 Body; PG 49 Cap; PG 94 Guide; PG 95 Valve; PG 99 1¼" union nut; PG 100 1¼" union swivel; EV 60 Small union nut; EV 128 Small union stud; EV 158 Union swivel (⅜" copper pipe); SA 6 Leather seat; SA 39 Valve stem nut; AV 28 Hand wheel nut.

ACCELERATOR VALVE.

This valve is designed to assist the Brake Valve in discharging brake pipe pressure when making service stops on long trains to bring about a more uniform application of the brakes, and to apply them more promptly than heretofore.

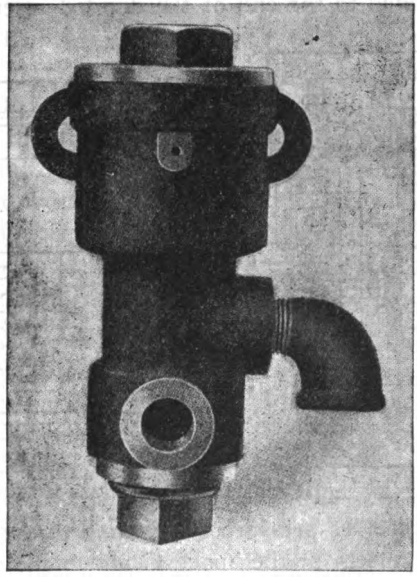

Fig. 287. Accelerator Valve.

The Valve is perfectly automatic in its operation, being governed entirely by the volume of air in the brake pipe, operating only when the train is of such a length

as to warrant the use of same. The operation is similar to that of the graduating mechanism in the Brake Valve, opening about four seconds after the Brake Valve handle has been moved to a graduating notch, and closing in about the same length of time after the graduating valve has closed.

Fig. 287 is an outside view of the Valve showing connection to brake pipe and exhaust which is through the street ell. A sectional view is shown in Fig. 288. The Valve is bolted to the end of the divided reservoir (Fig.

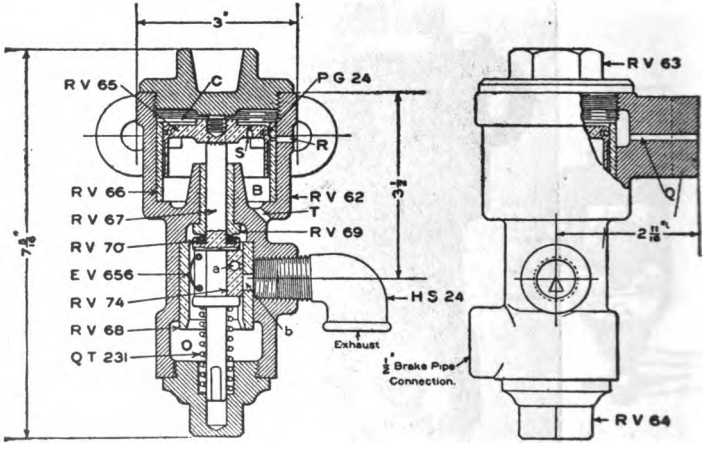

Fig. 288

279), and receives pressure from same through passage Q which connects to the space C above the piston RV 65. The brake pipe connection leads to the slide valve chamber O.

Chamber B is open to the atmosphere through port T, and in the operation of the Valve, will carry off the discharge of pressure through port S, and any leakage by the piston RV 65 or valve stem RV 67.

The slide valve RV 74, when at rest, laps the port b and exhaust, and is held in this position by the spring QT 231 through the medium of valve stem RV 67, which seats in the manner shown. Port b is triangular, the larger portion being at the bottom, and in operation brake pipe pressure is gradually cut off as the slide valve closes. Port a in the slide valve is oblong being just long enough to uncover the triangular port b, when the slide valve is wide open. To give the slide valve a slow closure port R is provided in the valve body, and port S through the piston RV 65 as shown. When the valve is in operation and brake pipe pressure is being discharged to the atmosphere through ports a and b, ports R and S are open to discharge the pressure above the piston and divided reservoir. As soon as the pressure in the divided reservoir has reduced sufficiently for the spring QT 231 to operate, it will move the valve slowly upward until the port R is cut off, which will then reduce the discharge from the reservoir about one-half, giving the slide valve the slow closure desired.

The valve operates when there are eight or more cars in a train, and requires from fifteen to seventeen pounds pressure in the divided reservoir to operate it. Any pressure passing into this reservoir, as with a shorter train than eight cars, will be discharged to the atmosphere through ports S and T, the slide valve remaining closed.

The proper names of parts of the accelerator valve are as follows: PG 24, Piston ring; RV 62, Body; RV 63, Upper cap; RV 64, Lower cap; RV 65, Piston; RV 67, Valve stem; RV 70, Leather seat; RV 74, Slide valve; QT 231, Spring; EV 656, Slide valve spring; HS 24, ½" Street ell.

STRAIGHT AIR REDUCING VALVE.

The purpose of this valve is to limit the pressure in the driver, and truck brake cylinders, to 40 pounds when using the straight air brake.

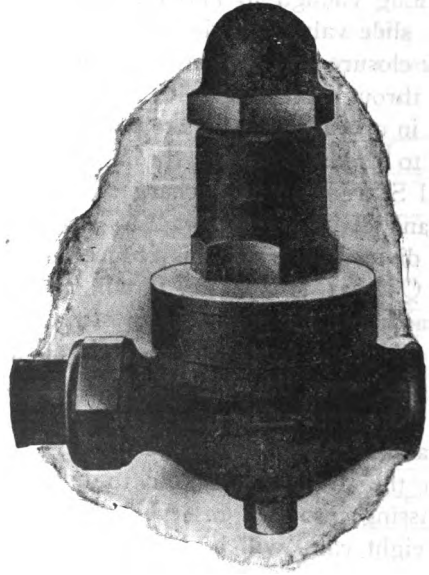

Fig. 289. Straight Air Reducing Valve.

Fig. 289 is a photographic view of the reducing valve and Fig. 290 a section showing the valves, passages, etc.

Connection from the brake valve is made to the union fitting A and by means of the passage C pressure is free to pass to the feed valve SA 26. Connection B leads to

double check valve and brake cylinders. During the time the tension of the spring against the diaphragm is stronger than the force exerted against it by the brake cylinder pressure, valve SA 26 will be held open, whereupon pressure from the main reservoir will be free to pass to the brake cylinders. As soon as the pressure

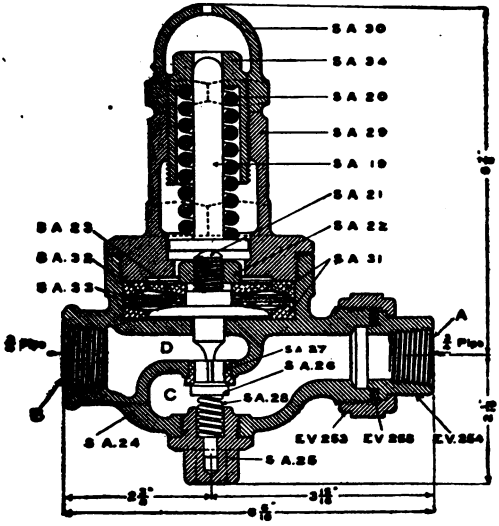

Fig. 290.

against the diaphragm is strong enough to overcome the resistance of the spring, the diaphragm will be moved upward, allowing the feed valve SA 26 to be closed by the spring SA 28, shutting off communication from the supply to the brake cylinders.

The names of the parts of this valve are as follows: SA 19, Regulating stem; SA 20, Regulating spring; SA

21, Diaphragm stem; SA 22, Nut; SA 23, Diaphragm Washer; SA 24, Body; SA 25, Feed valve cap nut; SA 26, Feed Valve; SA 28, Feed valve spring; SA 29, Spring box; SA 30, Check nut; SA 31, Diaphragm ring; SA 32, Diaphragm; SA 33, Diaphragm Shield; SA 34, Regulating nut; EV 253, ¾" Union nut; EV 254, ¾" Union swivel; EV 255, ¾" Union gasket.

HIGH SPEED CONTROLLER WITH LEVER SAFETY VALVE.

This valve is operative when the locomotive equipment is set for high speed service.

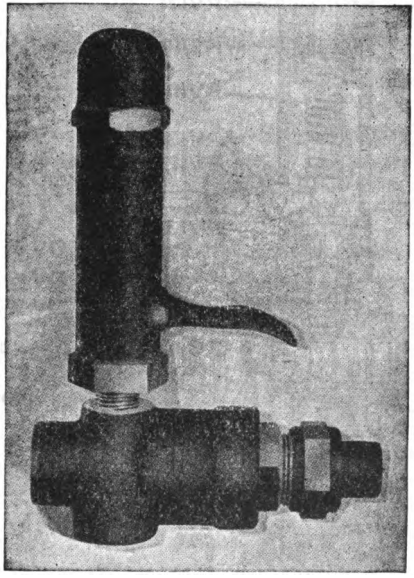

Fig. 291. High Speed Controller.

Fig. 291 is an outside view showing the general arrangement. Fig. 292 is a section showing the operative parts.

The Safety Valve is for use at all times to graduate off brake cylinder pressure after an application of the

train brakes when same is desired and to regulate the pressure in the brake cylinders during high speed operations. It is set at 53 pounds, and should so be adjusted in service.

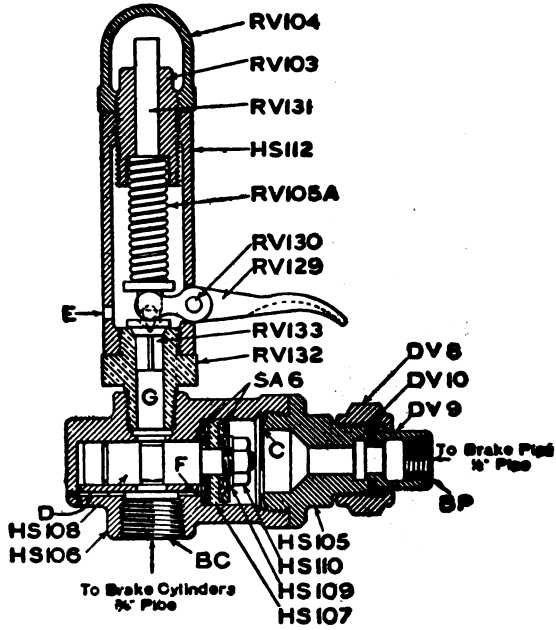

Fig. 292.

The High Speed Valve to which the Safety Valve is fastened connects with the brake cylinder pipe at BC and with brake pipe at BP.

The valve HS 108 with piston HS 107 operates when the brake pipe pressure is less than the pressure in brake cylinders. During all ordinary service applications the valve HS 108 will remain in position shown. In an emergency application when brake pipe pressure is

greatly reduced, the brake cylinder pressure will move the piston HS 107, and valve its full traverse to the seat C. This movement will restrict passage G leading to the safety valve, and atmosphere by the circular groove in the valve HS 108 being moved forward, closing a portion of the passage. This will give a gradual blow down from the brake cylinders through passage G until shut off by the Safety Valve. The valve will remain in this position until the brakes are released.

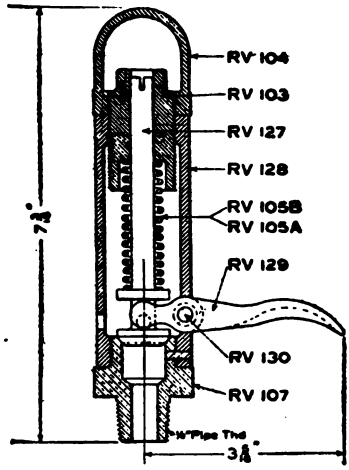

Fig. 293.

Ports F and D allow the brake cylinder pressure around the piston HS 107, and back of the valve HS 108, so that the piston is free to operate at a slight difference of pressure.

Fig. 293 is a sectional view of the lever safety valve, furnished with schedules B2, B2-S and B2-HP.

Fig. 294 shows the quick release valve which is used

with the B2-S equipment, for switch engine service, to quickly release the pressure from the driver brake cylinders.

The lever safety valves shown in Figs. 292 and 293 are for use at all times to graduate off brake cylinder pressure, after an application of train brakes, when the same is desired. These valves are set at fifty-three pounds, and should be so adjusted in service.

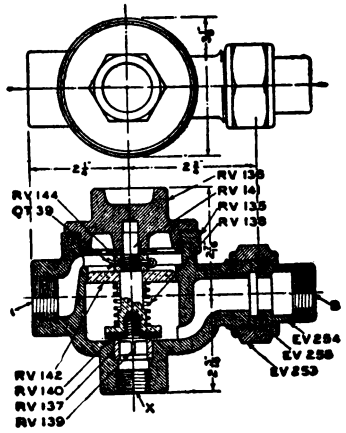

Fig. 294.

The two lever safety valves, although similar in appearance, are different in operation. In Fig. 292 the valve RV 133 is of a pop-safety valve design, and when forced open will remain so until the pressure beneath it has fallen to a trifle less than the force exerted against it by the spring RV 105 A. The safety valve shown in Fig. 293 is an ordinary blow-down pop valve, and while it will operate and reduce brake cylinder pressure to the desired amount, is not as free an operating valve as

the one shown in Fig. 292. It is obvious to state that these lever safety valves are also for use to keep the brake cylinder pressure within a certain prescribed limit, as, if they were not used, an application of the straight air brake, followed by one of the automatic, would greatly increase the brake cylinder pressure over the prescribed limit.

The quick release valve shown in Fig. 294, as before stated, is for use with schedule B2-S switch engine equipment. This valve is to hasten the release after an application of the automatic or straight air brakes. Referring to Fig. 294, connection A leads to the double check valve as shown in the piping diagram of this equipment. Connection B leads to the driver brake cylinders and connection X to the exhaust.

QUESTIONS.

904. What is the latest addition to the New York Duplex Air Brake System?

905. How many of these, and what are they?

906. Name the different systems covered by these three equipments?

907. In what leading features do the B2 equipments differ from older New York systems previously described?

908. What other advantage is gained by its use?

909. What advantage is gained by the use of the accelerator valve?

910. What other advantage is there in connection with its use?

911. For what conditions of service is the plain B2 designed.

912. For what class of service is the B2S equipment adapted?

913. For what class of service is the B2HP equipment designed only?

914. How many pressures may be carried in the brake pipe, or in the main reservoir, with the B2H.P.?

915. How are these pressures regulated?

916. How are the regulating portions operated?

917. For what kind of service is the B2H.S. equipment adapted?

918. How are the pressures regulated with this latter equipment?

919. How are the automatic brakes applied to locomotive and train?

920. How are they released?

921. How are the train brakes released, and the locomotive brakes held?

922. How are both released?

923. How are the locomotive brakes released?

924. How are the locomotive brakes (straight air) applied?

925. How are the brakes applied in an emergency?

926. In case a hose bursts, the train parts, or a conductor's valve opens thereby applying the brakes, what should be done?

927. After an application of the train brakes, how may the locomotive brakes be graduated off, or entirely released if desired?

928. How may the pressure in the locomotive brake cylinders be observed at all times?

929. When two, or more locomotives are in a train, what should be done with the air brake equipment on those locomotives from which the brakes are not operated?

930. In case it becomes necessary to cut out the straight air brake, what must be done?

931. How may the automatic brake be cut out?

932. How may the cut out cock be located so that the auxiliary reservoirs will remain charged while the brake is cut out?

933. What advantage would this be in descending long grades?

934. What are the functions of cut out cocks Nos. 3 and 6?

935. What is the function of main reservoir cut out cock No. 4?

936. What is the straight air controller designed for?

937. When should cut out cocks Nos. 5-6 and 7 be used?

938. Mention some of the principal points of difference between the B2 brake valve, and the B, and B1 valves?

939. What is the purpose of full automatic release, and straight air application position?

940. What functions are performed by the valve, in running, and straight air release position?

941. When should Lap position be used?

942. What are the functions of the graduating positions?

943. When is emergency position to be used?

944. What are some of the advantages gained by using the duplex pressure controller, and double pressure system?

945. What is the Accelerator valve designed to accomplish?

946. Is it automatic in operation?

947. What is the purpose of the straight air reducing valve?

948. When is the high speed controller, with lever safety valve operative?

ET LOCOMOTIVE BRAKE EQUIPMENT.

The new locomotive equipment illustrated and described in this article is designated by the symbol ET. It differs materially from the present combined automatic and straight air brake in that it consists of considerably less apparatus. In operation it possesses all the advantages of the latter type of brake equipment and several other important ones which are necessary in modern locomotive brake service to produce satisfactory results.

The design of the principal valves comprising the ET equipment is such that it may be applied to any locomotive regardless of the service in which it is employed without change or modification in any of its parts; and the locomotive so equipped may be used in any kind of service, such as high speed passenger, double-pressure control, all ordinary passenger and freight, and in all kinds of switching service, without change or special adjustment of the brake apparatus. All principal valves are so designed that they may be removed for repairs and replacement without disturbing the pipe joints.

In operation its important advantages are: The locomotive brakes may be controlled with or independently of the train brakes and this without regard to the position of the locomotive in the train, whether coupled to another, as in double heading, or used as a helper and assigned to any position in the train.

They may be applied with any desired pressure between the minimum and the maximum attainable, and

this pressure will be automatically maintained in the locomotive brake cylinders regardless of leakage and variation in piston travel, undesirable though these defects are, until released by the brake valve.

They can be perfectly graduated on or off either in the automatic or in the independent application; hence, in all kinds of service the train may be handled without shock or danger of parting, and in passenger service especially smooth, accurate stops can be made with greater ease than was heretofore possible.

MANIPULATION.

The instructions for manipulating the ET equipment are practically the same as those given for the combined automatic and straight air brake; therefore, no radical departure from present methods of brake manipulation is required to get the desired results.

The necessary instructions are briefly as follows:

When not in use, carry the handles of both brake valves in running position.

To apply the locomotive and train brakes, move the handle of the automatic brake valve to the service position, making the required brake-pipe reduction, then back to lap position, which is the one for holding brakes applied.

To release the train brakes, move the handle to the release position and hold it there until all train brakes are released; then, move it to holding position, graduating off the locomotive brakes by short, successive movements between running and holding positions, aiming to have the locomotive brakes entirely released as the train stops.

To apply the brakes in an emergency, move the handle of the automatic brake valve quickly to emergency position and leave it there until the train stops, or the danger is passed.

To make a smooth and accurate two-application passenger stop, make the first application sufficiently heavy to bring the speed of the train down to about 15 miles per hour at a convenient distance from the stopping point, then release train brakes by moving the handle to release position, then the locomotive brakes by moving it to running position for two or three seconds before re-applying. A little experience with the ET equipment will enable the engineer to make smooth and accurate stops with much greater ease than was heretofore possible.

When using the independent brake only, the handle of the automatic brake valve should be carried in running position. The independent application may be released by moving the independent-brake-valve handle to running position. Release position is for use when the automatic brake valve handle is not in running position.

While handling long trains of cars, in road or switching service, the independent brake should be operated with care and judgment, to prevent damage to the cars and lading, caused by running the slack in or out too hard. In cases of emergency arising while the independent brake is applied, apply the automatic brake instantly. The safety valve will restrict the brake cylinder pressure to the proper maximum. The brakes on the locomotive and on the train should be alternated in heavy grade service, to prevent overheating of driving-wheel tires and to assist the pressure retaining valves in holding the train while the auxiliary reservoirs are being recharged.

After all brakes are applied automatically, to gradu-

ate off or entirely release the locomotive brakes only, use release position of the independent brake valve.

The cylinder gauge will show at all times the pressure in the locomotive brake cylinders, and this gauge should be observed in all brake manipulation.

Release Position of the *Independent Brake Valve* will release the locomotive brakes under any and all conditions.

The train brakes should invariably be released before detaching the locomotive, holding with hand brakes where necessary. This is especially important on a grade as there is otherwise no assurance that the car, cars, or train so detached will not start when the air brakes leak off, as they may in a short time where there is considerable leakage.

The automatic brakes should never be used to hold a standing locomotive, or a train even where the locomotive is not detached, for longer than ten minutes, and not for such time if the grade is very steep or the condition of the brakes is not good. The safest method is to hold with hand brakes only, and keep the auxiliary reservoirs fully charged so as to guard against a start from brakes leaking off, and to be ready to obtain any part of full braking power immediately on starting.

The independent brake is a very important safety feature in this connection, as it will hold a locomotive with a leaky throttle, or quite a heavy train on a fairly steep grade if, as the automatic brakes are released, the slack is prevented from running in or out, depending on the tendency of the grade, and giving the locomotive a start. Illustrating the best method by a descending train, apply the independent brake heavily as the stop is being completed, thus bunching the train solidly; then, when stopped, place and *leave* the handle of the independent

brake valve in application position, release the automatic brakes and keep them charged. Should the train start through inability of the independent brakes to hold it, the automatic brakes will have been sufficiently recharged to make an immediate stop, and in which case enough hand brakes should be applied to render the necessary aid to the independent brakes.

Many runaways and some serious wrecks have resulted through failure to comply with the foregoing instructions.

When leaving the engine while doing work about it, or when it is standing at a coal chute or water plug, always leave the independent brake valve handle in application position.

In case the automatic brakes are applied by a bursted hose, a break-in-two or the use of a conductor's valve, place the handle of automatic brake valve in lap position.

Where there are two or more locomotives in a train, the double cut-out cock in the brake pipe under the automatic brake valve should be turned to close the brake pipe, and the automatic-brake-valve handle should be placed on lap on each except the one from which the brakes are being handled.

Before leaving the roundhouse, the engineer should try the brakes with both brake valves, and see that no serious leaks exist. The pipes between the distributing valve and the brake valves should be absolutely tight.

PARTS OF THE EQUIPMENT.

1. THE AIR PUMP to compress the air.

2. THE MAIN RESERVOIRS, in which to store the air and collect water and dirt.

3. A DUPLEX PUMP GOVERNOR to control the pump when the pressures are attained for which it is regulated.

4. A DISTRIBUTING VALVE, and small double-chamber reservoir to which it is attached, placed on the locomotive to perform the functions of triple valves, auxiliary reservoirs, double check valve, high-speed reducing valves, etc.

5. TWO BRAKE VALVES, the AUTOMATIC to operate locomotive and train brakes, and the INDEPENDENT to operate locomotive brakes only.

6. A FEED VALVE to regulate the brake-pipe pressure.

7. A REDUCING VALVE to reduce the pressure for the independent brake valve, and for the air signal system when used.

8. TWO AIR GAUGES; one, a DUPLEX to indicate brake-pipe and main-reservoir pressures; the other, a SINGLE POINTER to indicate locomotive brake-cylinder pressure.

9. DRIVER, TENDER, and TRUCK-BRAKE CYLINDERS, CUT-OUT COCKS, AIR STRAINERS, HOSE COUPLINGS, FITTINGS, etc., incidental to the piping, for purposes readily understood.

The piping hereafter referred to is named as follows:

RESERVOIR PIPE: Connects the main reservoir to the Automatic Brake Valve, Distributing Valve, Feed Valve, and Reducing Valve.

FEED-VALVE PIPE: Connects the Feed Valve to the Automatic Brake Valve.

REDUCING-VALVE PIPE: Connects the Reducing Valve to the Independent Brake Valve, and to the Signal System, when used.

BRAKE PIPE: Connects the Automatic Brake Valve

with the Distributing Valve and all Triple Valves on the cars in the train.

BRAKE-CYLINDER PIPE: Connects the Distributing Valve with the Driver, Tender and Truck-Brake Cylinders.

APPLICATION-CHAMBER PIPE: Connects the Application Chamber of the Distributing Valve to the Automatic Brake Valve through the Independent Brake Valve.

DOUBLE-HEADING PIPE: Connects the Application Chamber exhaust port of the Distributing Valve to the Automatic Brake Valve through the Double Cut-Out Cock.

ARRANGEMENT OF APPARATUS.

A piping diagram of the ET equipment is shown in Fig. 295.

Air compressed by the pump passes as usual to the main reservoirs and the reservoir pipe. The main-reservoir cut-out cock is to cut off the supply of air when removing any of the apparatus except the governor. The end toward the main reservoir is tapped for a connection to the maximum pressure head of the Pump Governor. When closed it discharges the air from the pipe between it and the automatic brake valve.

Beyond the main-reservoir cut-out cock, the reservoir pipe has four branches, one of which runs to the automatic brake valve, one to the feed valve, one to the reducing valve, and one to the distributing valve. As a result, the automatic brake valve receives air from the main reservoir in two ways, one direct and the other through the Feed Valve.

The Feed-Valve Pipe from the feed valve to the auto-

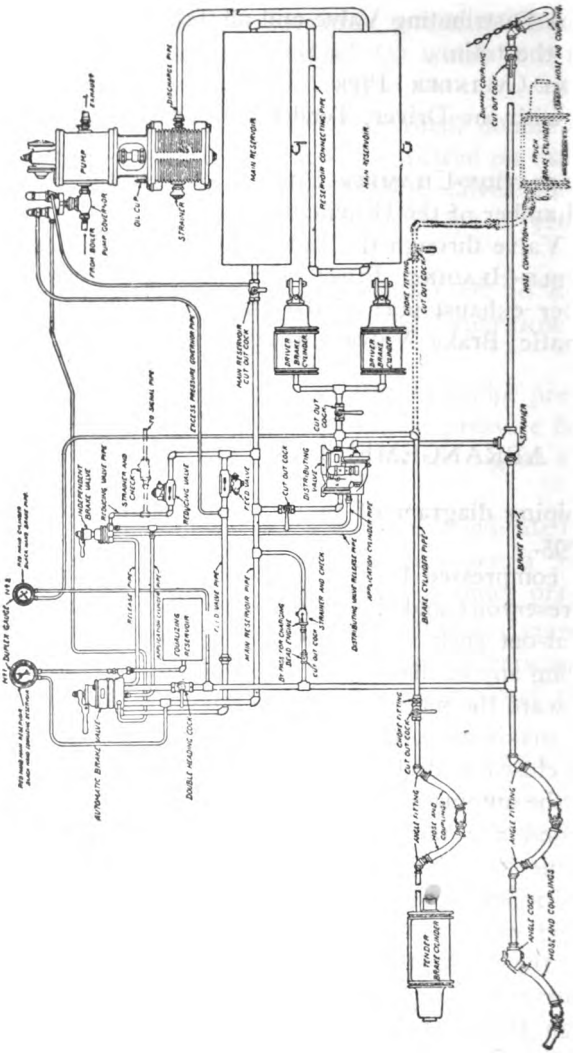

FIG. 296. PIPING DIAGRAM OF THE ET EQUIPMENT

matic brake valve has a branch to the top of the excess-pressure head of the duplex pump governor.

The third branch of the reservoir pipe connects with the reducing valve. Air at the pressure for which this valve is set (45 pounds) is thus supplied to the independent brake valve through the reducing-valve pipe. When the signal system is installed, it is connected to the reducing valve pipe, in which case the reducing valve takes the place of the signal reducing valve usually employed to supply the train air-signal system. In the branch pipe supplying the signal are placed a combined strainer and check-valve, and a special choke fitting. The former prevents any dirt from reaching the check valve and choke plug. The check valve prevents air from flowing back from the signal pipe when the independent brake is applied. The choke plug prevents the reducing valve from raising the signal-pipe pressure so quickly as to destroy the operation of the signal.

The distributing valve has five pipe connections, made through the double-chamber reservoir, three on the left and two on the right. Of the three on the left, the upper is the supply from the main reservoir; the intermediate is the double-heading pipe, leading through the double cut-out cock, when turned to cut out the brake valve from the brake pipe, to the automatic brake valve; and the lower is the application-chamber pipe, leading through the independent-brake valve, when the handle is in running position, to the automatic brake valve. Of the two on the right, the lower is the brake-pipe-branch connection, and, the upper is the brake-cylinder pipe branching to all brake cylinders on the engine and tender. In this pipe are placed cocks for cutting out the brake cylinders when necessary, and in the engine truck and

tender brake cylinder cut-out cocks are placed special choke fittings to prevent serious loss of main-reservoir air, and the release of the other locomotive brakes during a stop, in case of burst brake cylinder hose connection. The cylinder gauge is connected with the brake cylinder pipe.

The automatic-brake-valve pipe connections, other than already mentioned, are the brake-pipe branch through the double cut-out cock, the main-reservoir, the equalizing reservoir, the duplex gauge, and the lower connection to the excess-pressure head of the pump governor.

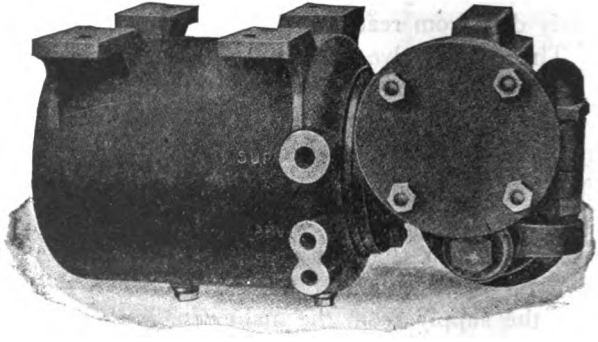

FIG. 296. DISTRIBUTING VALVE AND DOUBLE-CHAMBER RESERVOIR

CONNECTIONS:

SUP—Main-Reservoir Pipe; ABV—Double-Heading Pipe; SBV—Application-Chamber Pipe

THE DISTRIBUTING VALVE.

This valve is the important feature of the ET equipment. Fig. 296 is a photographic view of the left side of the valve and its double-chamber reservoir. The three pipe connections, as previously referred to, are plainly

shown. Fig. 297 is a similar view of the right side, showing the pipe connections there and the two chambers of

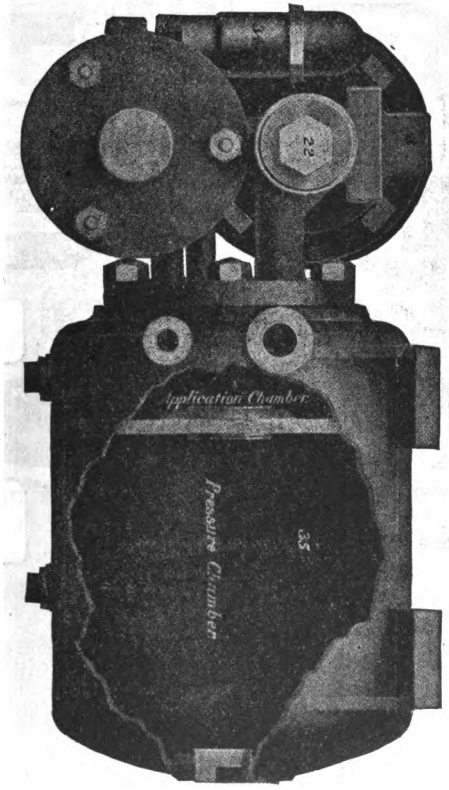

FIG. 297. DISTRIBUTING VALVE AND DOUBLE-CHAMBER RESERVOIR

PIPE CONNECTIONS:
Upper—Brake-Cylinder Pipe; Lower—Brake Pipe

the reservoir; also the safety valve 34, which is an essential part of the distributing valve. To simplify the tracing of the ports and connections, the various positions of this

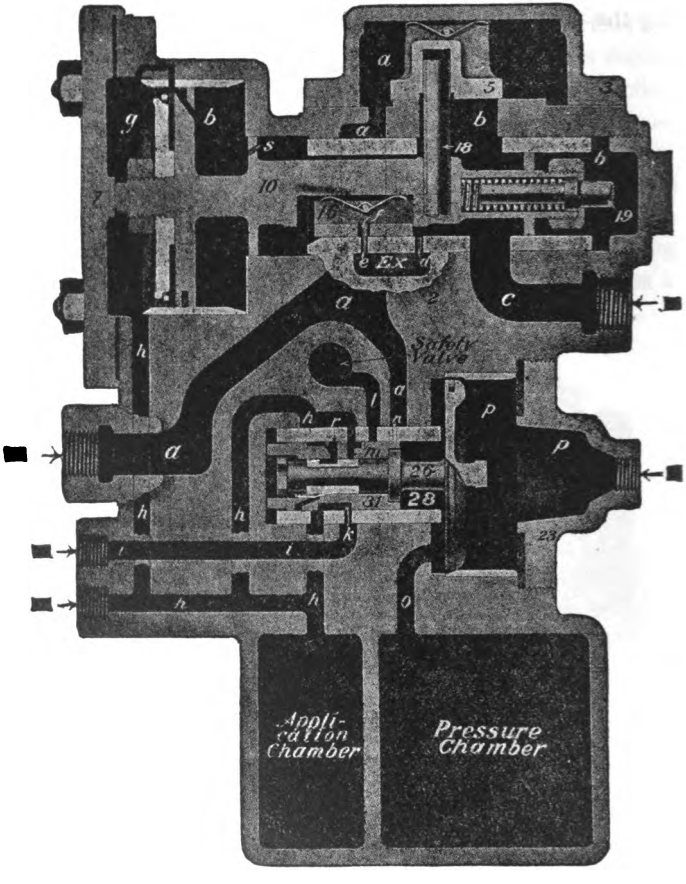

FIG. 298. THE DISTRIBUTING VALVE, DIAGRAMMATIC CONNECTIONS:

MR—Main-Reservoir Pipe; DH—Double-Heading Pipe; AC—Application-Chamber Pipe; BC—Brake Cylinder Pipe; BP—Brake Pipe

valve are illustrated in ten diagrammatic drawings; that is, the valve is distorted to show the parts differently than actually constructed, with the object of explaining the operation clearly instead of showing exactly how they are designed. The chambers of the reservoir are for convenience indicated at the bottom as a portion of the valve itself. In Fig. 308, equalizing piston 26, graduating valve 28, and equalizing slide valve 31, are shown as actually constructed. But as there are ports in the valves which cannot thus be clearly indicated, the diagrammatic illustrations show each slide valve in two parts, one below and the other above the piston stem, with similar divisior of parts in the bush.

Fig. 298 shows the operative parts in the same position as in Fig. 299 and is used merely for the sake of greater clearness. Referring to these figures it will be seen that main-reservoir pressure is always present in the chamber surrounding application valve 5 by its connection through passage *a, a,* to the main-reservoir pipe. Chambers *b* to the right of application piston 10 are always in free communication with the brake cylinder through passage *c* and brake-cylinder pipe. Chamber *g* at the left of application piston 10 is a portion of the application chamber, being always connected with it by passage *h,* and is also connected to the brake valves through the application-chamber pipe.

INDEPENDENT APPLICATION. When the handle of the Independent Brake Valve is moved to the application position, air from the main reservoir, limited by the reducing valve to a maximum of 45 pounds, is allowed to flow to the application chamber, forcing application piston 10 to the right as shown in Fig. 300. We will assume that 45 pounds is so admitted and maintained. This

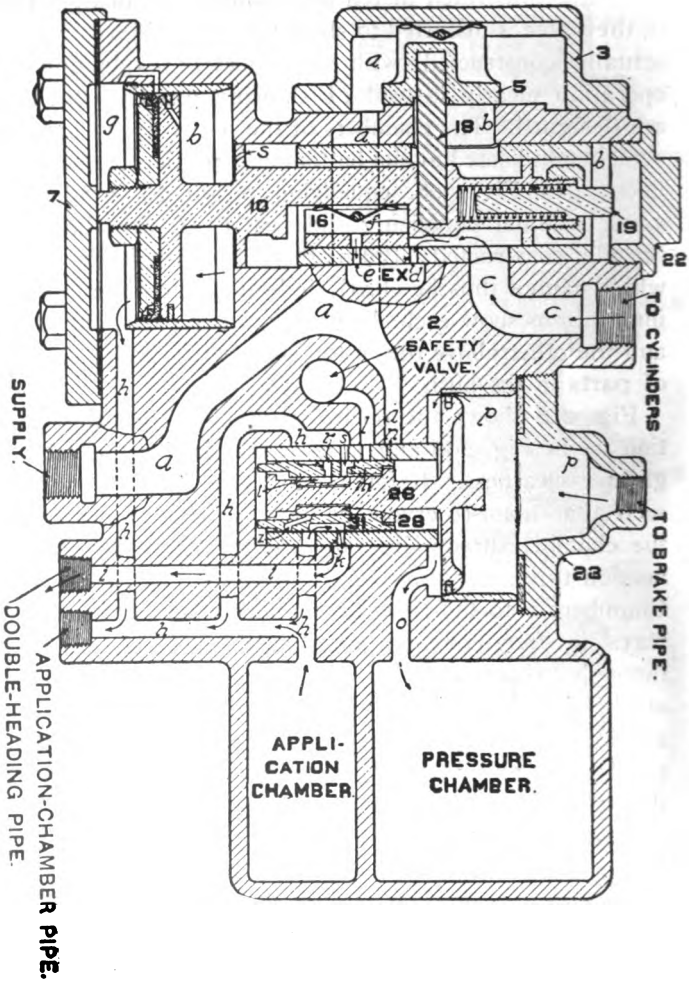

FIG. 299. RELEASE, AUTOMATIC OR INDEPENDENT

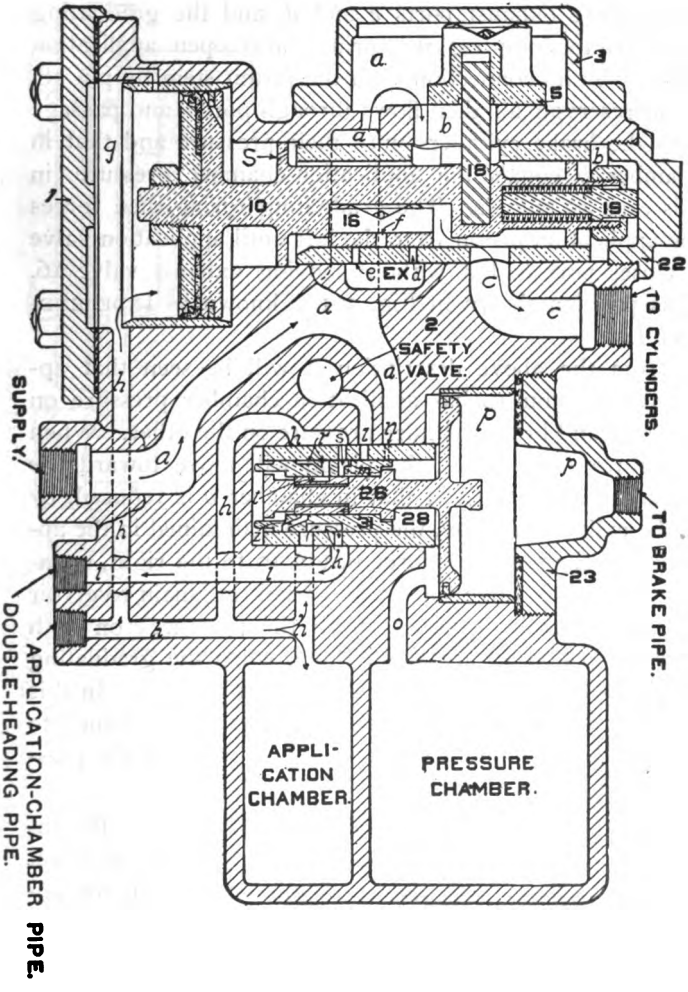

FIG. 300. INDEPENDENT APPLICATION

movement of application piston 10 causes exhaust valve 16 to close exhaust ports *e* and *d*, and the graduating stem 19 to compress its spring; also open application valve 5 by its connection with the piston stem by pin 18. Main reservoir air then flows through port *b* and passage *c* to the brake cylinders until their pressure and that in chamber *b* equals the application-chamber pressure, in this case 45 pounds. The graduating spring then forces the application piston 10 to the left until application valve 5 closes port *b*, but without moving exhaust valve 16. This position shown in Fig. 301 is known as INDEPENDENT LAP.

From the above description it will be seen that application piston 10 has application chamber pressure on one side and brake-cylinder pressure on the other. When either pressure varies, the piston will move toward the lower. Consequently if that in chamber *b* is reduced, by brake-cylinder leakage, the pressure maintained in the application chamber will force piston 10 to the right, opening application valve 5 and again admitting main reservoir air to the brake cylinders until the pressures on both sides of piston 10 are again equal, when the graduating spring will force the piston back to lap position. In this way the brake-cylinder pressure is always maintained to that in the application chamber. This is called the pressure maintaining feature.

INDEPENDENT RELEASE. When the handle of the independent brake is moved to release position, a direct opening is made through the rotary valve from the application chamber to the atmosphere. This permits the pressure in the application chamber to escape; therefore, as this pressure is being exhausted, brake-cylinder pressure in chamber *b* moves application piston 10 to the left,

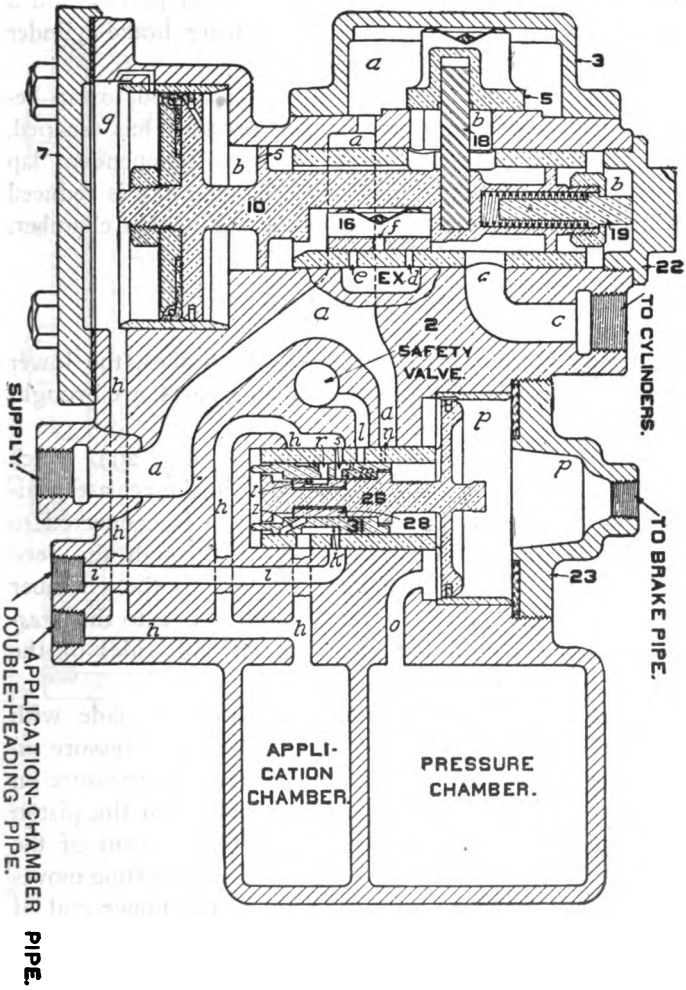

FIG. 301. INDEPENDENT LAP

causing exhaust valve 16 to open exhaust ports *e* and *d* as shown in Fig. 299, thereby allowing brake-cylinder pressure to escape to the atmosphere.

If the independent brake valve is returned to lap before all of the application-chamber pressure has escaped, the application piston 10 will return to independent lap position as soon as the brake-cylinder pressure is reduced a little below that remaining in the application chamber.

AUTOMATIC OPERATION.

During automatic operation of the brakes, the lower movable parts, known as the equalizing parts, are brought into action.

AUTOMATIC RELEASE. Referring to Fig. 299, which shows the movable parts of the valve in the release position, it will be seen that as chamber *p* is connected to the brake pipe, brake-pipe air flows through the feed groove around the top of piston 26 into the chamber above the slide valve 31, and through port *o* to the *pressure chamber,* until the pressures on both sides of the piston are equal.

SERVICE. When a service application is made with the automatic brake valve, the brake-pipe pressure in chamber *p* is reduced, causing a difference in pressure on the two sides of this piston, which results in the piston moving toward the right. The first movement of the piston closes the feed groove, and at the same time moves the graduating valve until it uncovers the upper end of port *z* in the equalizing slide valve 31. As the piston continues its movement, the shoulder on the end of its stem engages the slide valve, which is then also moved to the right until port *z* in the slide valve registers with port

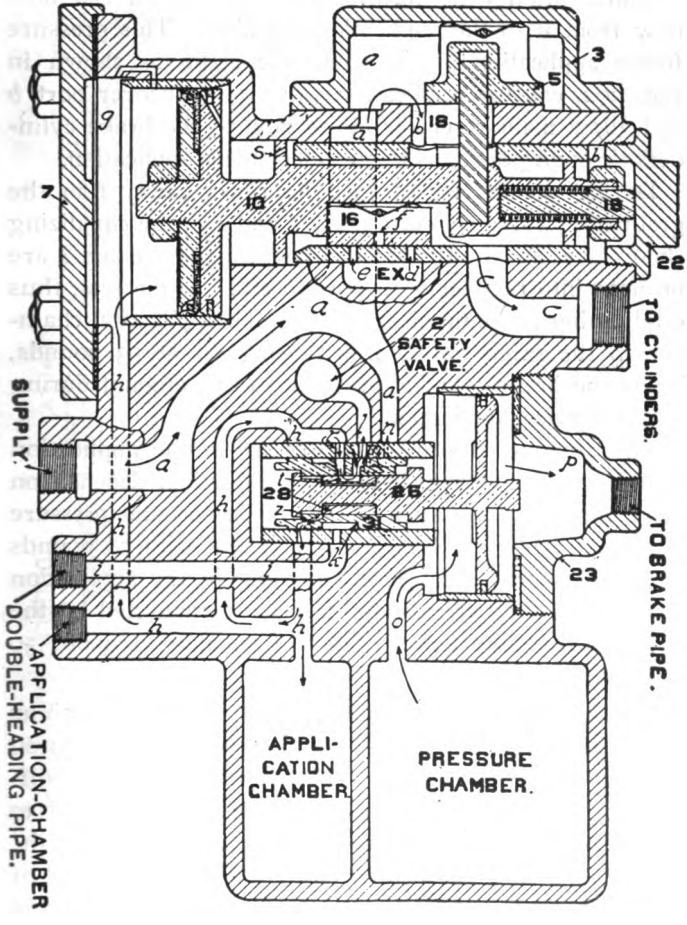

FIG. 302. AUTOMATIC SERVICE

h in the seat. As the slide valve chamber is always in communication with the pressure chamber, air can now flow from it to the application chamber. This pressure forces application piston 10 to the right, as shown in Fig. 302, causing application valve 5 to uncover port *b* and allow main reservoir air to flow to the brake cylinders through port *c*, as in an independent application.

During the movement just described, cavity *t* in the graduating valve connects ports *r* and *s* in the equalizing slide valve, and by the same movement ports *r* and *s* are brought into register with ports *h* and *l* in the seat, thus establishing a communication from the application chamber to the safety-valve, which being set at 53 pounds, limits the brake-cylinder pressure to this amount during a full service application.

The amount of pressure resulting in the application chamber for a certain brake-pipe reduction, depends on the comparative volumes of the application and pressure chambers. These volumes are such that with 70 pounds in the pressure chamber and nothing in the application chamber, if they are allowed to remain connected by the ports in the slide valve, they will equalize at about 50 pounds.

SERVICE LAP. The conditions just described continue until the pressure in the *pressure chamber* is reduced enough below that in the brake pipe to cause the difference in pressure on the two sides of piston 26 to force it and graduating valve 28 to the left until the shoulder on the piston stem strikes the right-hand end of slide valve 31, the position indicated in Fig. 303, and known as SERVICE LAP. In this position, graduating valve 28 has closed port *z* so that no more air can flow from the *pressure chamber* to the application chamber;

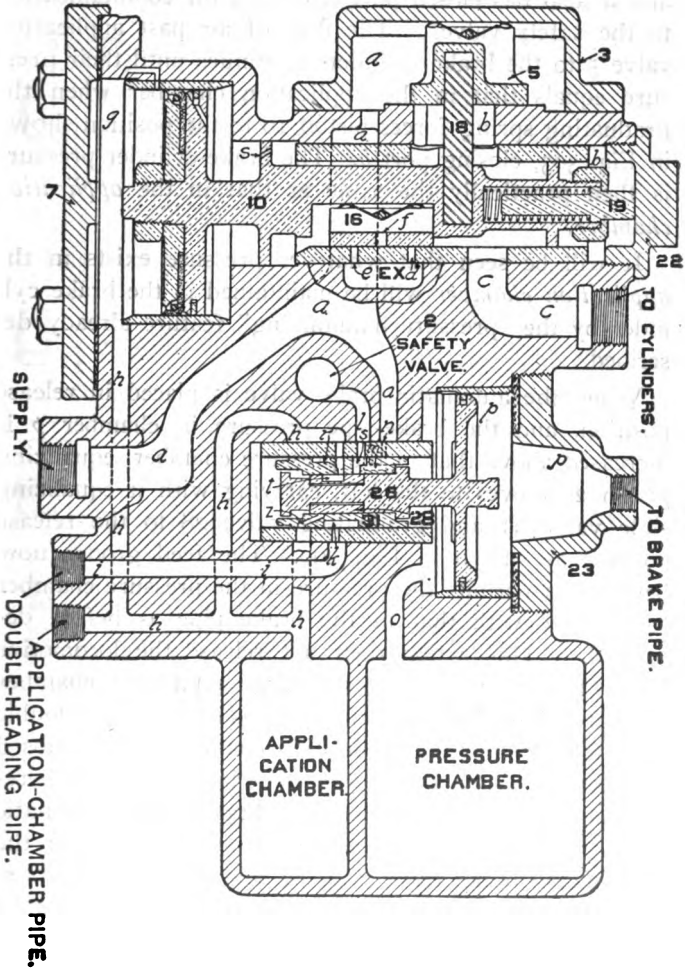

FIG. 303. SERVICE LAP

and it also has closed port *s*, cutting off communication to the safety valve. The flow of air past application valve 5 to the brake cylinders continues until their pressure equals that in the application chamber when the graduating spring forces piston 10 to the position shown in Fig. 303, closing port *b*. The brake-cylinder pressure is then practically the same as that in the *application chamber*.

It will be seen that whatever pressure exists in the *application chamber* will be maintained in the brake cylinder by the "pressure maintaining" feature already described.

When the automatic brake valve is placed in release position, and the brake-pipe pressure in chamber *p* is increased above that in the pressure chamber, equalizing piston 26 moves to the left, carrying with it equalizing slide valve 31 and graduating valve 28 to the release position as shown in Fig. 299. The feed groove now being open permits the pressure in the pressure chamber to equalize with that in the brake pipe as before described. This action does not release the locomotive brakes because it does not discharge application chamber pressure. The double-heading pipe is closed at the double cut-out cock, and the application chamber pipe is closed by the rotary valve of the automatic brake valve. Therefore, to release the locomotive brakes, the automatic brake valve must be moved to running position, or the independent brake valve must be held in release position, in which positions the rotary valve of either will connect the application chamber pipe with the atmosphere. As the application chamber pressure escapes, the cylinder pressure will force application piston 10 to the left until

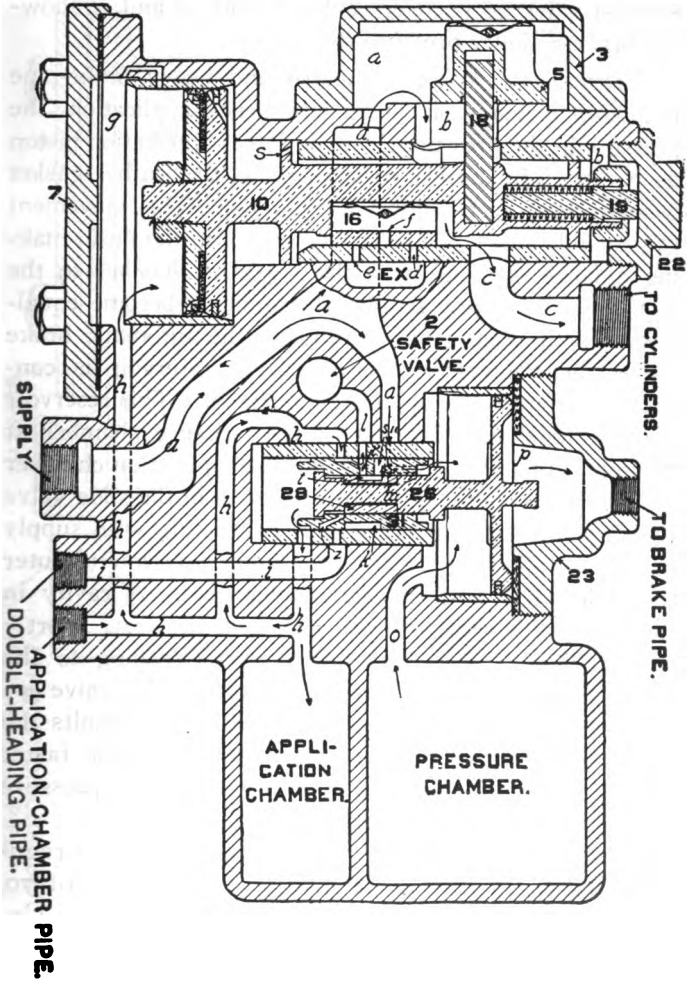

FIG. 304. EMERGENCY

exhaust valve 16 uncovers exhaust ports *d* and *e*, allowing brake-cylinder pressure to escape.

EMERGENCY. When a sudden and heavy brake-pipe reduction is made, as in an emergency application, the pressure in the pressure chamber forces application piston 26 to the right until it strikes against the leather gasket beneath head 23 as shown in Fig. 304. This movement causes slide valve 31 to uncover port *h* in the bush, making a large opening from the *pressure chamber* to the *application chamber*, so that they quickly become equalized. In the emergency position of the automatic brake valve, the volume of the equalizing reservoir is connected to that of the application chamber. This reservoir volume, together with that of the pressure chamber at 70 pounds pressure, equalizes into the application chamber at about 60 pounds. The dotted port *m* in the slide valve registers with port *n* in the seat connecting with supply passage *a*, allowing air from the main reservoir to enter the slide valve and application chambers. A cavity in the slide valve registers with port *h* in the seat. Port *r* in the slide valve registers with port *l* leading to the safety valve. The cavity and port *r* in the slide valve are connected by a small port, the size of which permits the air in the application chambers to escape a little faster than ports *m* and *n* can supply it, preventing the pressure from rising above the amount desired.

In High-Speed Brake Service, the feed valve is regulated for 110 pounds brake-pipe pressure instead of 70, and main-reservoir pressure is 130 or 140 pounds. Under these conditions an emergency application raises the *application chamber* pressure to about 85 pounds, but the area of the small passage to port *r* is so proportioned that the flow of *application-chamber* pressure to the safety

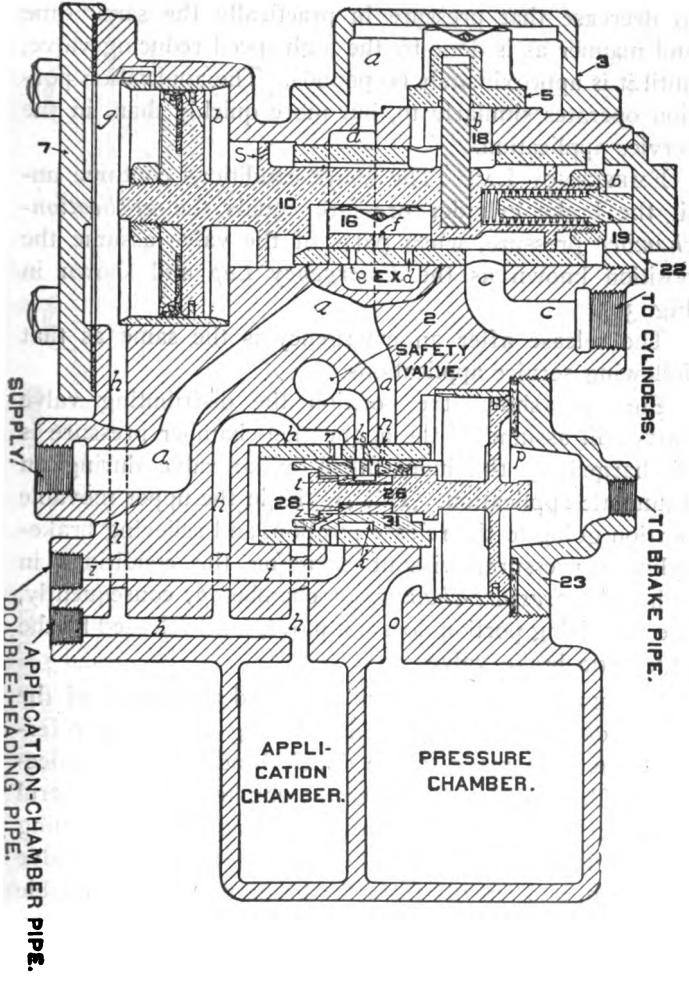

FIG. 305. EMERGENCY LAP

valve is just enough greater than the supply through *m*, to decrease that pressure in practically the same time and manner as is done by the high-speed reducing valve, until it is approximately 60 pounds. The application portion operates similarly to, but more quickly than, in the service application.

EMERGENCY LAP. The above conditions continue until the brake cylinder pressure equals the *application-chamber* pressure, when parts of the valve assume the position known as the *Emergency Lap* and shown in Fig. 305.

The release after an emergency is the same as that following service applications.

Fig. 306 shows the position the distributing valve parts will assume, if the application-chamber pressure is discharged by the independent brake valve during an automatic application. This results in the upper movable portion going to the release position, and relieving brake-cylinder pressure, without changing the conditions in either the *pressure-chamber* or chamber *p;* consequently, the equalizing portion does not move, until released by the automatic brake valve.

DOUBLE HEADING. It will be noted that in all of the above descriptions of the distributing valve, no reference has been made to the double-heading pipe connection. This is only used when the engine does not control the train brakes, and it then becomes an exhaust opening for the distributing valve when the automatic brake valve is on lap, and cut off from the brake pipe by the double cut-out cock. This will be better understood from the description of the pipe connections as already explained. The operation of the distributing valve is similar to that described during automatic brake applications with the

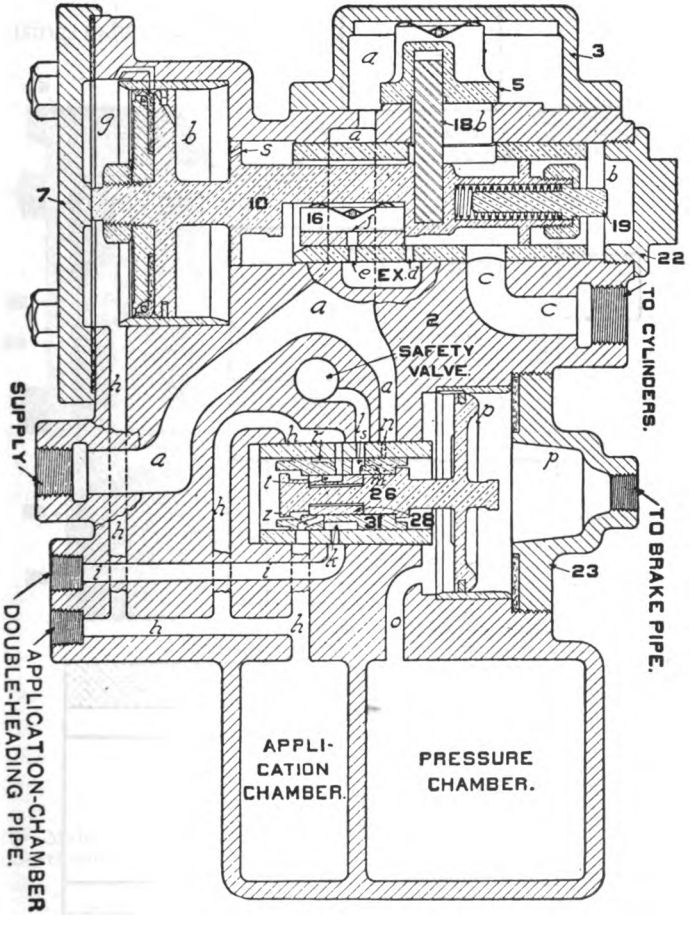

FIG. 306. RELEASE POSITION

When Locomotive Brake is released by Independent Brake Valve after an application by Brake Pipe Reduction

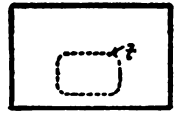

PLAN OF
GRADUATING VALVE.

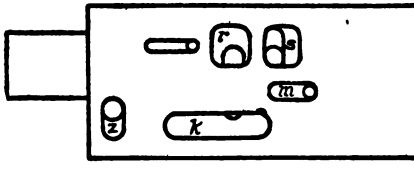

FACE OF SLIDE VALVE.

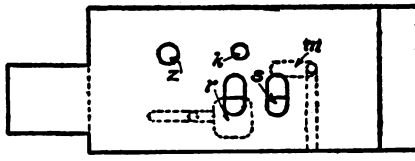

PLAN OF SLIDE VALVE

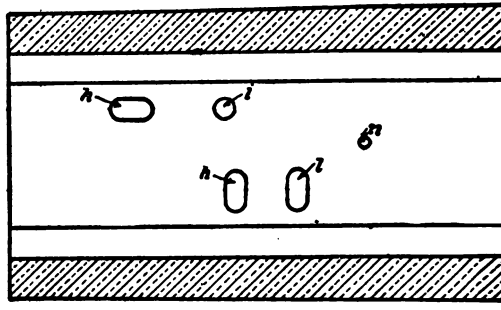

FIG. 307. GRADUATING VALVE, EQUALIZING SLIDE VALVE, AND SLIDE VALVE SEAT

exception of the release, which is brought about by the equalizing piston 26 moving to the release position and causing exhaust cavity in the equalizing slide valve 31

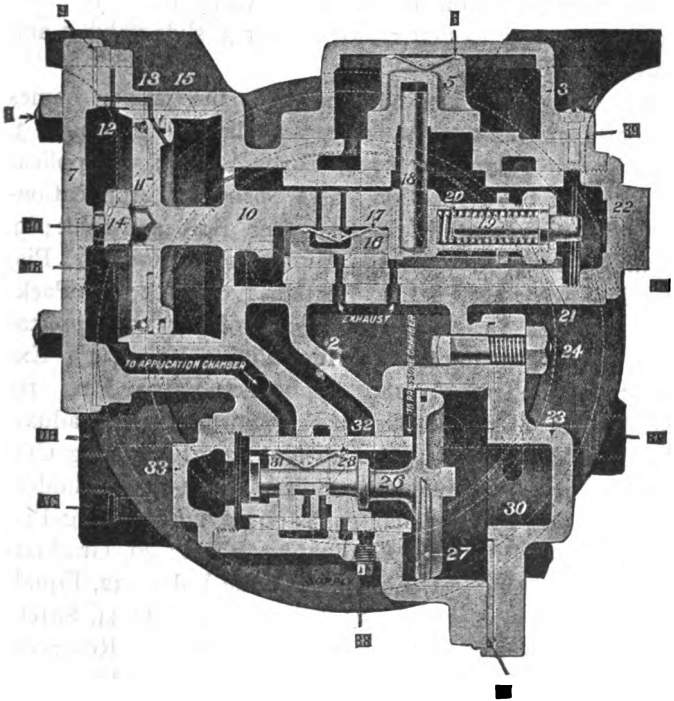

FIG. 308. DISTRIBUTING VALVE CONNECTIONS:
MR—Main Reservoir Pipe; DH—Double-Heading Pipe; AC—Application-Chamber Pipe; BC—Brake-Cylinder Pipe; BP—Brake Pipe

to connect ports *i* and *h* in the slide valve seat, thereby permitting the pressure in the application chamber to escape to the atmosphere through the double heading

pipe, the double cut-out cock, and the automatic brake valve. In double heading, therefore, the release of the distributing valve is similar to that of a triple valve.

To remove piston 10 and slide valve 16, it is absolutely necessary to *first* remove cover 3, slide valve 5 and valve pin 18.

Referring to Figs 298 and 308, the proper names of parts of this apparatus are as follows: 2, Body; 3, Application-Valve Cover; 4, Cover Screw; 5, Application Valve; 6, Application-Valve Spring; 7, Application-Cylinder Cover; 8, Cylinder-Cover Bolt and Nut; 9, Cylinder-Cover Gasket; 10, Application Piston; 11, Piston Follower; 12, Packing-Leather Expander; 13, Packing Leather; 14, Application-Piston Nut; 15, Application-Piston Packing Ring; 16, Exhaust Valve; 17, Exhaust-Valve Spring; 18, Application-Valve Pin; 19, Graduating Stem; 20, Graduating Spring; 21, Graduating-Stem Nut; 22, Upper Cap Nut; 23, Equalizing Cylinder Cap; 24, Cylinder Cap Bolt and Nut; 25, Cylinder-Cap Gasket; 26, Equalizing Piston; 27, Equalizing-Piston Packing Ring; 28, Graduating Valve; 29, Graduating-Valve Spring; 31, Equalizing Slide Valve; 32, Equalizing-Slide-Valve Spring; 33, Lower Cap Nut; 34, Safety Valve; 35, Double-Chamber Reservoir; 36, Reservoir Stud and Nut; 37, Reservoir Drain Plug; 38, Distributing-Valve Drain Plug; 39, Application-Valve-Cover Gasket; 40, Application Piston Cotter; 41, Distributing-Valve Gasket.

Fig. 309 is a sectional view of the safety valve which is a necessary part of the distributing valve. It is of an improved type, which insures reliability of operation. It is unlike the ordinary safety valve, as its construction is such as to cause it to close quickly with a "pop" action,

insuring its seating firmly. It is very sensitive in operation, and responds to very slight differences of pressure.

The names of the parts are: 2, Body; 3, Cap Nut; 4, Valve; 5, Stem Valve; 6, Adjusting Spring; 7, Adjusting Nut.

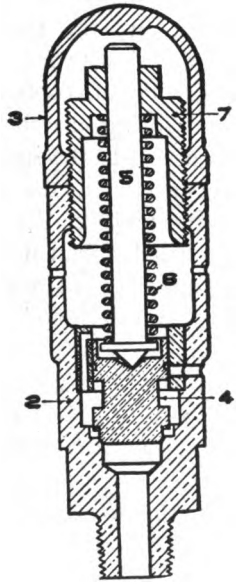

FIG. 309. SAFETY VALVE

Valve 4 is held to its seat by the compression of the spring 6 between the stem and adjusting nut 7. When the pressure below valve 4 is in excess of the force exerted by the spring, it raises, being guided in its movement by the brass bush in the body 2. Ports are drilled in this bush; one outward through the body to the atmosphere, and the other upward to the spring chamber.

Although only one of each of these is shown in the cut, there are eight of the first and two of the second. As the valve moves upward, its lift is determined by the stem 5 striking the cup nut 3. It closes the vertical ports connecting the valve and spring chambers and opens the lower ports to the atmosphere. As the air pressure below valve 4 decreases, and the tension of the spring forces the stem and valve downward, the valve gradually closes the lower ports to the atmosphere, and opens those between the valve and spring chambers. The discharge air pressure then has access to the spring chamber. This chamber is always connected to the atmosphere by two small holes through the body 2; the air from the valve chamber enters more rapidly than it can escape through these holes, causing pressure to accumulate above the valve, and close it with the "pop" action before mentioned.

The adjustment of this safety valve is accomplished by removing cap nut 3, and screwing up or down on adjusting nut 7. After the proper adjustment is made, cap nut 3 must be replaced and securely tightened, and the valve operated a few times. Particular attention must be given to the holes in the valve body to see that they are open, and that they are of the proper size, especially the two upper holes.

This safety valve should be adjusted for 53 pounds.

THE TYPE H AUTOMATIC BRAKE VALVE.

This Brake Valve, although modeled to a considerable extent upon the principles of previous valves, is necessarily different in detail, since it not only performs all the functions of such types, but also those absolutely

necessary to obtain all the desirable operating features of the Distributing Valve.

Fig. 310 is taken from a photograph of this brake valve, while Fig. 311 shows two views, the upper one being a plan view with section through the rotary-valve chamber, the rotary valve being removed; the lower one a vertical section. In these views the pipe connections are indicated.

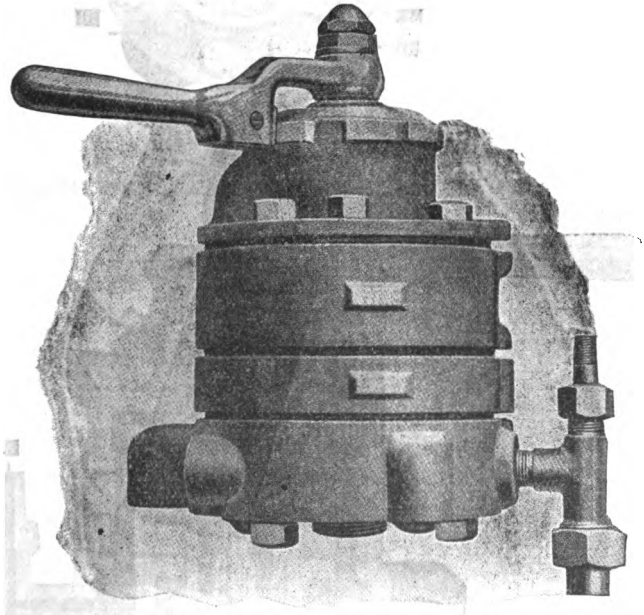

FIG. 310. TYPE H BRAKE VALVE

Fig. 312 is a top view, showing the six positions of the brake-valve handle, which are, beginning at the extreme left, Release, Running, Holding, Lap, Service and Emergency.

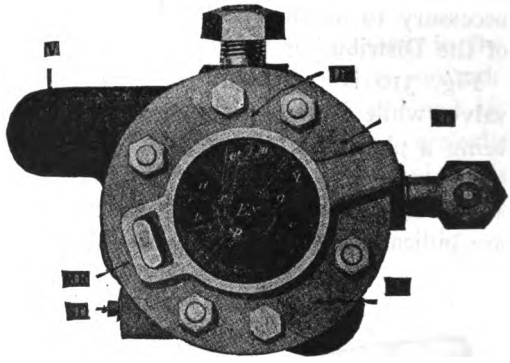

ROTARY-VALVE SEAT.

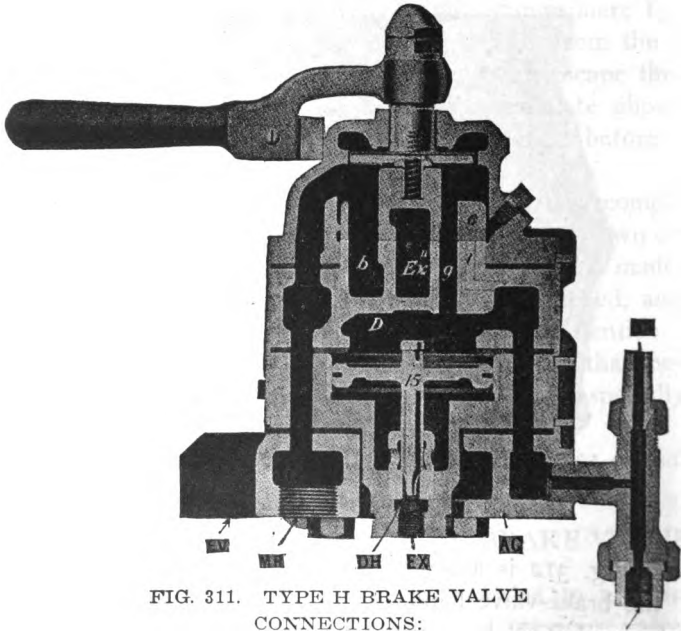

FIG. 311. TYPE H BRAKE VALVE

CONNECTIONS:

FV—Feed-Valve Pipe; MR—Main-Reservoir Pipe; GO—To Governor; DH—Double Heading Pipe; EX—Exhaust; AC—Application-Chamber Pipe; BP—Brake Pipe; GA—Duplex Air Gauge; ER—Equalizing Reservoir

Fig. 313 shows two views of this valve similar to those of Fig. 311, with the addition of a plan or top view of the rotary valve. Referring to the latter, *a*, *j* and *s* are ports extending directly through it, the latter connecting with a groove in the face; *f* and *k* are cavities in the valve

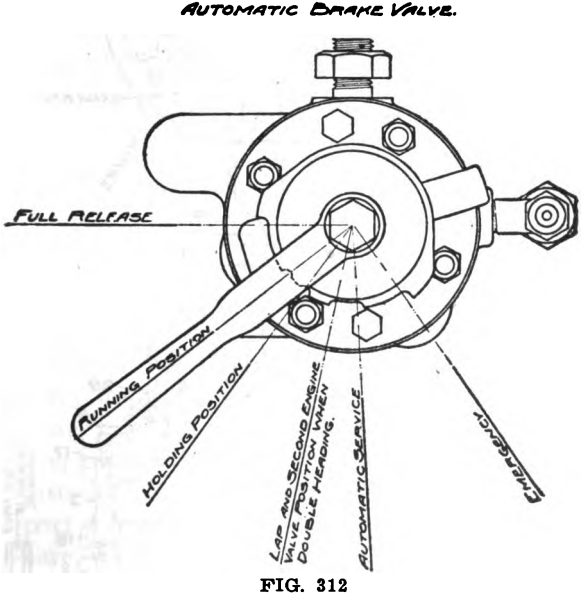

FIG. 312

face; *o* is the exhaust cavity; *x* is a port in the face of the valve connecting with *o*; *h* is a port in the face which passes over cavity *k* and connects with exhaust cavity *o*; *n* is a groove in the face. Referring to the ports in the rotary-valve seat, *d* leads to the feed-valve pipe; *b* and *c* lead to the brake pipe; *g* leads to chamber D; EX is the exhaust opening; *e* is the preliminary exhaust port lead-

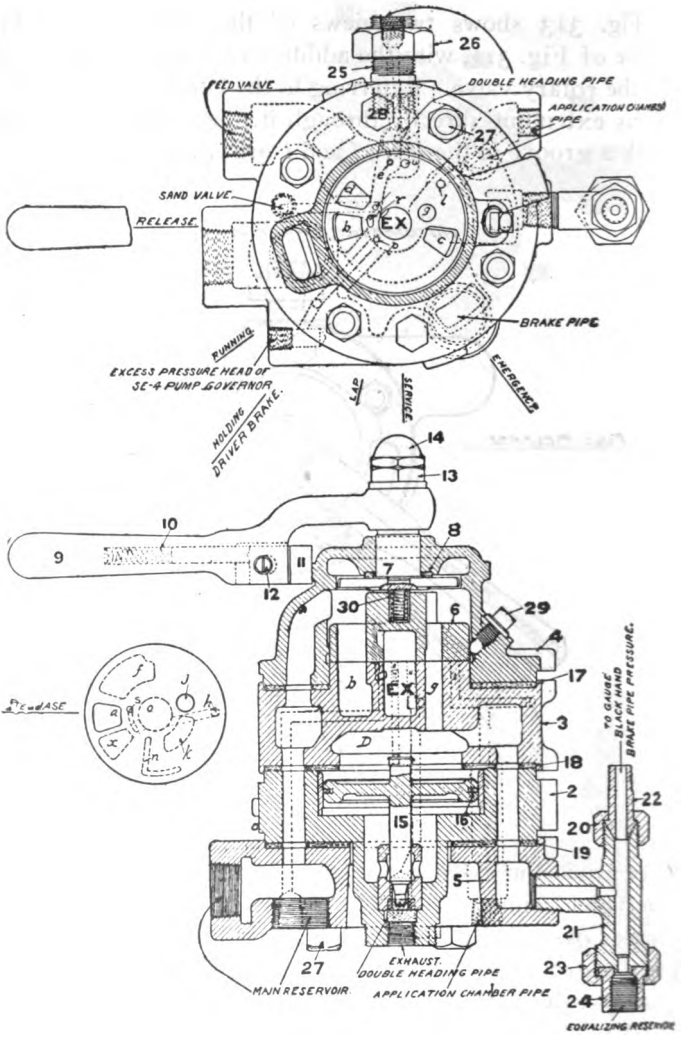

FIG. 313. AUTOMATIC BRAKE VALVE

ing to chamber D; *r* is the warning port leading to the exhaust; *p* is the port leading to the pump governor; *l* leads to the application-chamber pipe; *n* leads to the double-heading pipe.

In describing the operation of the brake valve, it will be more readily understood if the positions are taken up in the order in which they are most generally used, rather than their regular order as mentioned above.

RUNNING POSITION. This is the proper position of the handle to release the engine and tender brakes; also when the brakes are not being used, and the system is charged and ready for an application. In this position, cavity *f* in the rotary valve connects ports *b* and *d* in the valve seat, affording a large direct passage from the feed valve to the brake pipe, so that the latter will charge up as rapidly as the feed valve can supply the air, but cannot attain a pressure above that for which the feed valve is adjusted. Cavity *k* in the rotary valve connects ports *c* and *g* in the valve seat, so that chamber D, and the equalizing reservoir charge uniformly with the brake pipe, keeping the pressures on the two sides of the equalizing piston equal. Port *s* in the rotary valve registers with port *p* in the valve seat, permitting main-reservoir pressure, which is present at all times above the rotary valve, to pass to the excess-pressure head of the pump governor. Port *h* in the rotary valve registers with port *l* in the seat connecting the application chamber pipe to the exhaust cavity EX.

SERVICE POSITION. This position gives a gradual reduction of brake-pipe pressure to cause a service application. Port *h* in the rotary valve registers with port *s* in the valve seat, allowing air from chamber D and the

equalizing reservoir to escape to the atmosphere through cavities *o* in the rotary valve and EX in the valve seat. Port *e* is restricted so as to make the pressure in the equalizing reservoir, and chamber D fall gradually. As all other ports are closed, the fall of pressure in chamber D allows the brake-pipe pressure under the equalizing piston to raise it, and unseat the discharge valve, allowing brake-pipe air to flow to the atmosphere. When the pressure in chamber D is reduced the desired amount, the handle is moved to the *lap position,* thus stopping any further reduction in that chamber. Air will continue to discharge from the brake-pipe until its pressure has fallen to an amount a trifle less than that retained in chamber D, permitting the pressure in this chamber to force the piston downward and stop the discharge of brake-pipe air. It will be seen, therefore, that the amount of reduction in the equalizing reservoir determines that in the brake pipe, regardless of the length of the train.

LAP POSITION. This position is used while holding the brakes applied after a service application until it is desired either to make a further brake-pipe reduction, or to release them; also to prevent loss of main-reservoir pressure of the release of the brake in the event of a burst hose, a break-in-two, or the opening of the conductor's valve. Lap position is also used on all engines in a train that are not controlling the train brakes, as, with the handle in this position, port *h* in the rotary valve connects with port *u* in the seat. Therefore, when the double cut-out cock is turned to the position which cuts out the brake pipe, it makes a direct opening from port *i* in the distributing valve through the double-heading pipe to the atmosphere, and is the passage through which the air escapes from the application chamber when the automatic brakes are being released.

RELEASE POSITION. The purpose of this position is to provide a large and direct passage from the main reservoir to the brake pipe, to permit a rapid flow of air into the latter, to insure a quick release and recharging of the train brakes, but without releasing the engine and tender brakes.

Air at main-reservoir pressure flows through port *a* in the rotary valve to port *b* in the valve seat and to the brake pipe. At the same time, port *j* in the rotary valve registers with the equalizing port *g* in the valve seat, permitting main-reservoir pressure to enter chamber D above the equalizing piston.

In this position, port *s* in the rotary valve registers with warning port *r* in the seat and allows a small quantity of air to escape into the exhaust cavity EX, which makes sufficient noise to attract the engineer's attention to the position in which the valve handle is standing. If the handle is allowed to remain in this position, the brake system would be charged to main-reservoir pressure. To avoid this, the handle must be moved to Running or Holding Positions. The small groove in the face of the rotary valve which connects with port *s*, extends to port *p* in the valve seat, allowing main-reservoir pressure to flow to the excess-pressure head of the pump governor.

HOLDING POSITION. This position is so named because the locomotive brakes are held applied, as they are in release position, while the train brakes feed up to the feed-valve pressure. All ports register as in running position, except port *l*, which is closed.

Therefore, the only difference between Running and Holding Positions is, that in the former the application chamber is open to the atmosphere, while in the latter it is not.

EMERGENCY POSITION. This position is used when the most prompt and heavy application of the brakes is desired. Port *x* in the rotary valve registers with port *c* in the valve seat, making a large and direct communication between the brake pipe and atmosphere through cavity *o* in the rotary valve and EX in the valve seat. This direct passage causes a sudden and heavy discharge of brake-pipe pressure, causing the triple valves and distributing valve to go to the emergency position and apply the brake in the shortest possible time.

In this position the groove *n* in the rotary valve connects ports *g* and *l* in the valve seat, thereby allowing equalizing reservoir air to flow into the application chamber.

The oil plug 29 is placed in the top case 4, at a point to fix the level of the oil surrounding the rotary valve. Leather washer 8 prevents air in the rotary valve chamber from leaking past the rotary valve key to the atmosphere. Spring 30 keeps the rotary valve key firmly pressed against washer 8 when no main-reservoir pressure is present. The handle 9 contains a latch 11, which fits into notches in the top case, so located as to indicate the different positions of the brake valve handle. The spring 10 back of the latch forces the latter against the body with sufficient pressure to distinctly indicate when the handle arrives at each position.

To remove the brake valve take off nuts 27, thus allowing it to come away without disturbing the pipe bracket, or breaking any pipe joints. To take the valve proper apart, remove cap screws 28.

The brake valve should be located so that the engineer can operate it from his usual position, while looking forward or back out of the side-cab window, and in such

a manner that the handle will not meet with any obstruction throughout its entire movement.

The oil around the rotary valve furnishes thorough lubrication. Valve oil should be used for this purpose.

Fig. 313 shows all the principal parts, the proper names of each being as follows: 2, Bottom Case; 3, Rotary-Valve Seat; 4, Top Case; 5, Pipe Bracket; 6, Rotary Valve; 7, Rotary-Valve Key; 8, Key Washer; 9, Handle; 10, Handle-Latch Spring; 11, Handle Latch; 12, Handle-Latch Screw; 13, Handle Nut; 14, Handle Lock Nut; 15, Equalizing Piston; 16, Equalizing-Piston Packing Ring; 17, Valve-Seat Upper Gasket; 18, Valve-Seat Lower Gasket; 19, Pipe-Bracket Gasket; 20, Small Union Nut; 21, Brake-Valve Tee; 22, Small Union Swivel; 23, Large Union Nut; 24, Large Union Swivel; 25, Bracket Stud; 26, Bracket-Stud Nut; 27, Bolt and Nut; 28, Cap Screw; 29, Oil Plug; 30, Rotary-Valve Spring.

THE INDEPENDENT BRAKE VALVE.

Fig. 314 illustrates this valve, which is of the rotary type. Fig. 315 shows a vertical section through the center of the valve, and a horizontal section through the valve body, with the rotary valve removed, showing the rotary valve seat. Fig. 316 shows this valve similarly to Fig. 315, with the addition of a top view of the rotary valve. In these views, the pipe connections and positions of the handle are indicated. Port *b* in the seat leads to the supply connection from the main reservoir through the Reducing Valve. Port *c* leads to that portion of the application-chamber pipe which connects to the automatic-brake valve. Port *d* leads to that portion of the application-chamber pipe which connects the dis-

tributing valve. Port *h*, in the center, is the exhaust port leading directly to the atmosphere. Exhaust cavity *g* in the rotary valve is always in communication with exhaust port *h*. Groove *e* in the face of the valve communicates at one end with a port through the valve. This groove is always in communication with supply port *b*, and through the opening just mentioned air is admitted

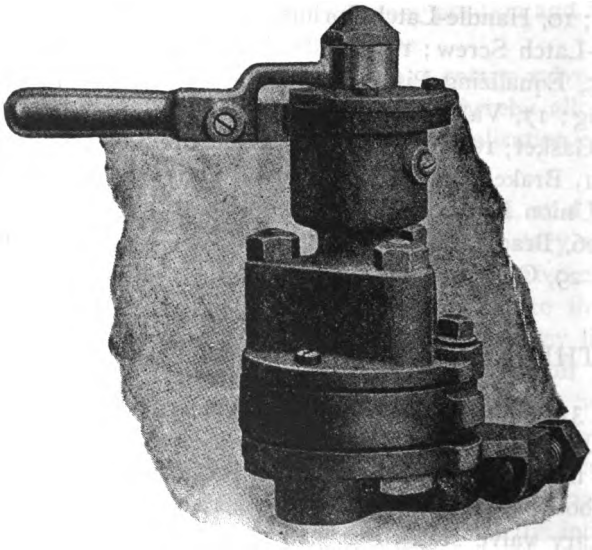

FIG. 314. THE INDEPENDENT BRAKE VALVE

to the chamber above the rotary valve, thus keeping it to its seat. Port *f* in the rotary valve consists of two circular openings in the face joined by a cylindrical passage over the top of cavity *g*.

RUNNING POSITION. This is the position that the independent brake valve should be carried in at all times

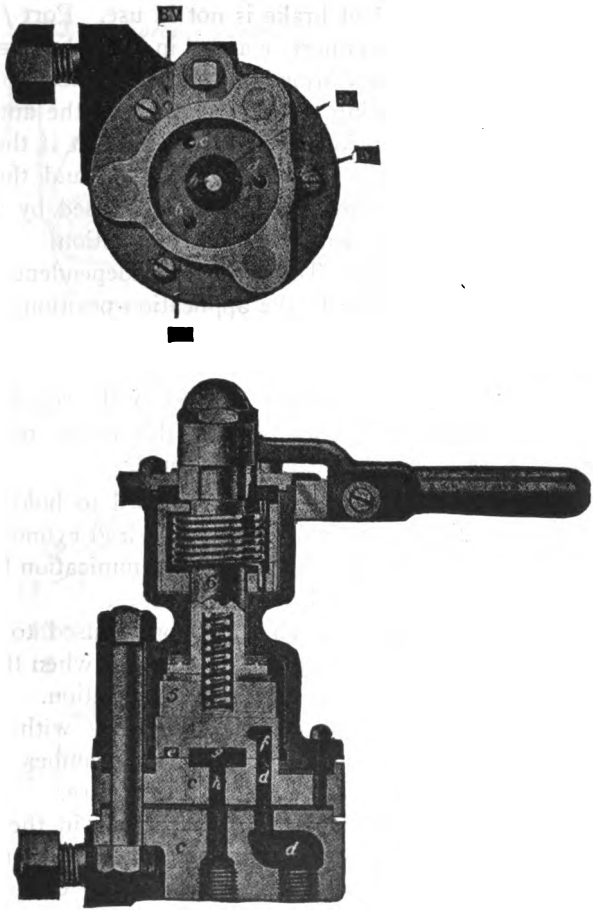

FIG. 315. INTERIOR VIEW OF THE INDEPENDENT BRAKE VALVE

CONNECTIONS:

BV—Application-Chamber Pipe to Automatic Brake Valve; EX—Exhaust; AC—Application-Chamber Pipe to Distributing Valve; MR—Reducing-Valve Pipe

when the independent brake is not in use. Port *f* in the rotary valve connects ports *c* and *d* in the valve seat, thus establishing communication between the application chamber of the distributing valve and port *l* of the automatic brake valve. Therefore, it will be seen that if the automatic brake valve is in running position, and the independent brakes applied, they can be released by returning the independent valve to running position.

SERVICE POSITION. To apply the independent brakes, move the brake valve to the application position; groove *e* connects ports *b* and *d*, allowing air to flow to the application chamber of the distributing valve. Since the supply pressure to this valve is fixed by the regulation of the reducing valve to 45 pounds, this is the maximum cylinder pressure that can be obtained.

LAP POSITION. This position is used to hold the independent brakes applied after the desired cylinder pressure is obtained, at which time all communication between operating ports is closed.

RELEASE POSITION. This position is used to release the pressure from the application chamber when the automatic brake valve is not in running position. In this position, the offset in cavity *g* registers with port *d*, allowing pressure in the application chamber to flow through ports *d*, *g* and *h* to the atmosphere.

In order to prevent leaving the handle in the release position, and thereby make it impossible to operate the locomotive brakes by the automatic brake valve, spring 9 automatically returns handle 15 from the release to the running position.

The purpose of the oil plug 20 is the same as that described in the automatic brake valve.

The location of this valve should be governed by the

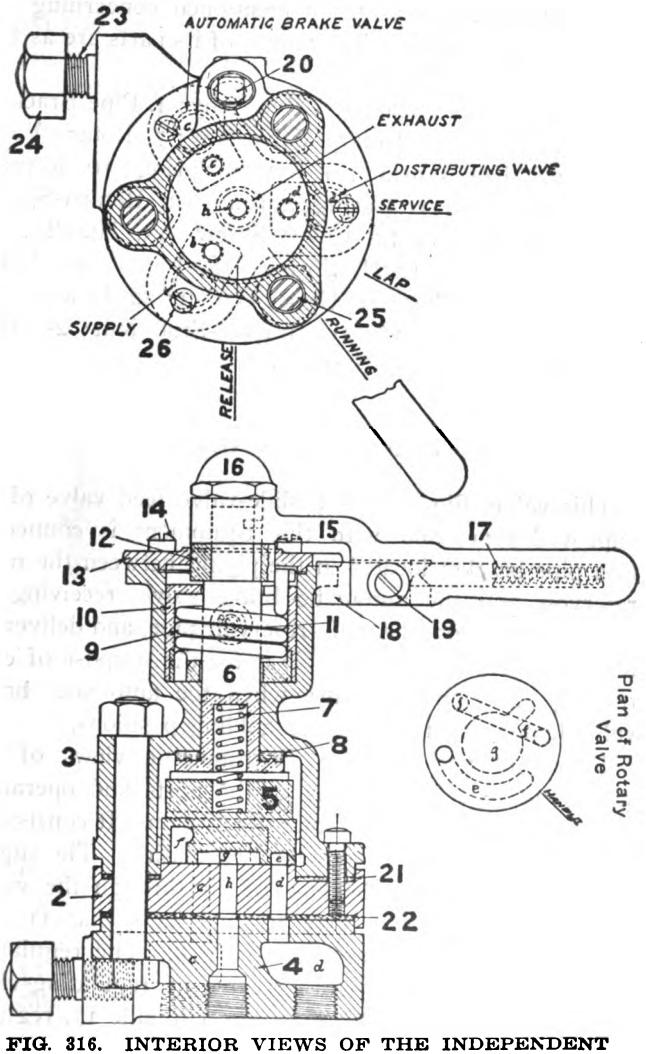

FIG. 316. INTERIOR VIEWS OF THE INDEPENDENT BRAKE VALVE

same considerations as those mentioned concerning the automatic brake valve. The names of its parts are as follows, referring to Fig. 316.

2, Rotary-Valve Seat; 3, Valve Body; 4, Pipe Bracket; 5, Rotary Valve; 6, Rotary-Valve Key; 7, Rotary-Valve Spring; 8, Key Washer; 9, Return-Spring; 10, Return-Spring Casing; 11, Casing Screw; 12, Return-Spring Clutch; 13, Cover; 14, Cover Screw; 15, Handle; 16, Handle Nut; 17, Latch Spring; 18, Latch; 19, Latch Screw; 20, Oil Plug; 21, Upper Gasket; 22, Lower Gasket; 23, Bracket Stud; 24, Bracket-Stud Nut; 25, Bolt and Nut; 26, Cap and Screw.

THE FEED VALVE.

This valve, Fig. 317, is a slide-valve feed valve of an improved type, and with this equipment is connected to a pipe bracket located in the piping between the main reservoir and the automatic brake valve, receiving its supply of air from the main-reservoir pipe, and delivering it into the feed-valve pipe. It is for the purpose of controlling brake-pipe pressure when the automatic brake valve handle is in running or holding positions.

Figs. 318 and 319 are diagrammatic views of the valve and pipe bracket having the ports and operating parts in one plane to facilitate description. It consists of two sets of parts, the supply and regulating. The supply parts, which control the flow of air through the valve, consist of the supply valve 10, and its spring 11; the supply-valve piston 8 and its spring 6. The regulating parts consist of the regulating valve 13, regulating-valve spring 14, diaphragm 15, diaphragm spindle 17, regulating handle 23. Main-reservoir air enters through port

a, *a* to the supply-valve chamber B, forcing supply-valve piston 8 to the left, compressing piston spring 6 and causing supply valve 10 to open port *c*, permitting the air to pass through ports *c* and *d* to the feed-valve pipe at delivery, and through port *e* to diaphragm chamber L.

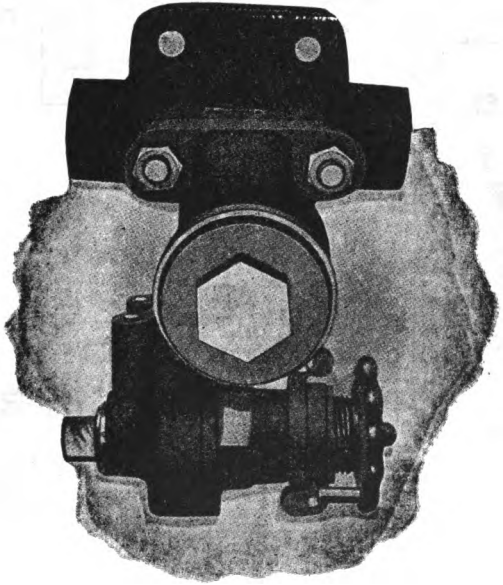

FIG. 317. FEED VALVE

At the same time air flows through port *f* in supply-valve piston 8 to chamber G, and through port *h* to regulating-valve chamber H. As regulating-valve 13 is raised from its seat, it will flow through port *k* to chamber L. When the feed-valve-pipe pressure, which is always present in chamber L against the dia-

piragm, exceeds the pressure of regulating spring 18, the diaphragm will yield and permit the regulating valve 13 to be forced to its seat, closing port *k* and cutting off

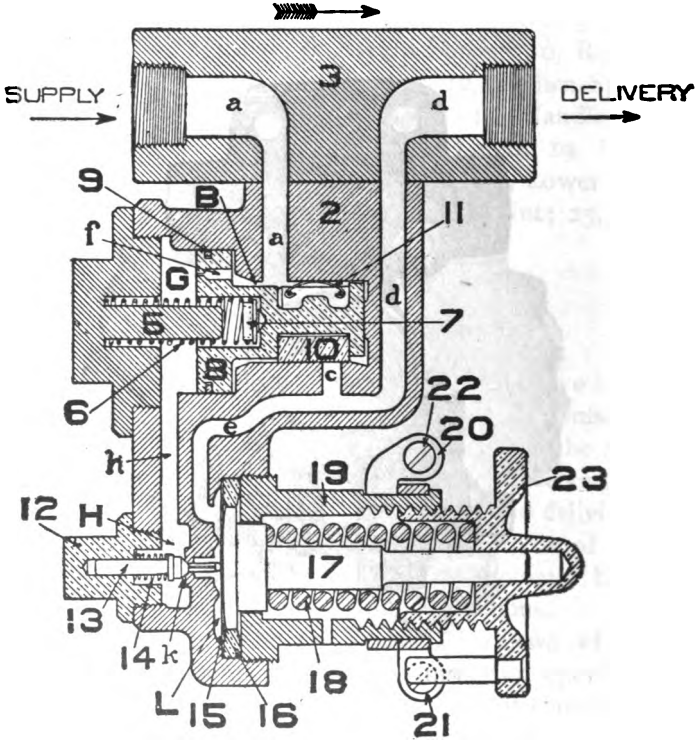

FIG. 318. DIAGRAM OF FEED VALVE, CLOSED

any further flow of air from chamber G. As the air which continues to flow through port *f* will quickly equalize the pressure on both sides of piston 8, spring 6 will

force the piston to the right, moving supply valve 10 and closing port *c*, thereby cutting off communication between the supply and the feed-valve pipe.

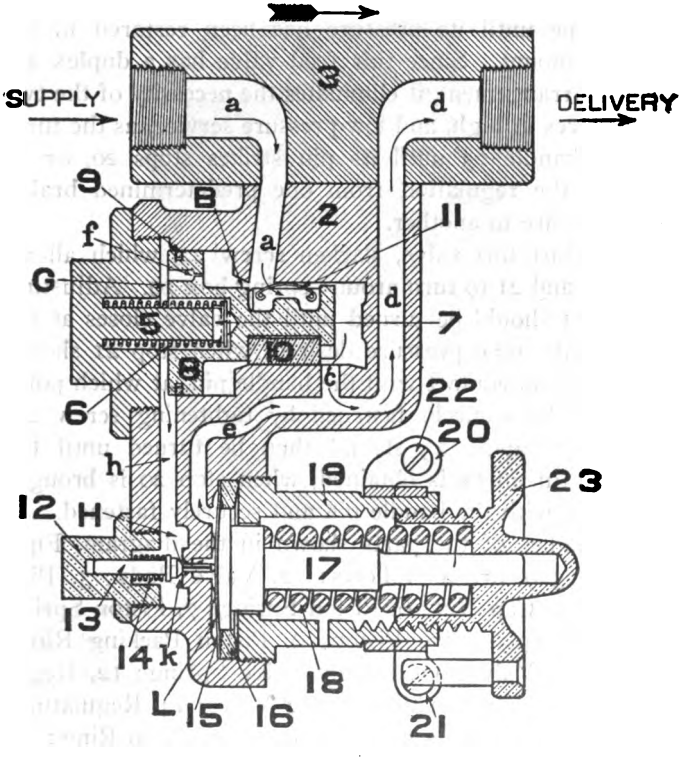

FIG. 319. DIAGRAM OF FEED VALVE, OPEN

When the pressure in the feed-valve pipe falls below that for which the valve is adjusted, regulating spring 18 will force the diaphragm forward, unseat regulating valve

13, and permit the accumulated air pressure in chamber G to escape through port *h*, chamber H, and port *k* to chamber L. This allows main-reservoir pressure in chamber B to force the supply valve piston 8 to left, and open port *c*, which again permits air to pass to the feed-valve pipe until its pressure has been restored to the proper amount. Since this feed valve has a duplex adjusting arrangement, it eliminates the necessity of the two feed valves in high, and low pressure service, as the turning of handle 23 until its pin strikes stops 20, or 21 changes the regulation from one predetermined brake-pipe pressure to another.

To adjust this valve, slacken screw 22, which allows stops 20 and 21 to turn around spring box 19. Adjusting handle 23 should be turned until the valve closes at the lower brake pipe pressure desired, when stop 21 should be brought in contact with the handle pin, at which point it should be securely fastened by tightening screw 22. Adjusting handle 23 should then be turned until the higher adjustment is obtained, when stop 20 is brought in contact with the handle pin and securely fastened.

The names of the parts shown in the diagram, Figs. 318 and 319, are as follows: 2, Valve Body; 3, Pipe Bracket; 5, Cap Nut; 6, Piston Spring; 7, Piston-Spring Tip; 8, Supply-Valve Piston; 9, Piston Packing Ring; 10, Supply Valve; 11, Supply-Valve Spring; 12, Regulating-Valve Cap; 13, Regulating Valve; 14, Regulating-Valve Spring; 15, Diaphragm; 16, Diaphragm Ring; 17, Diaphragm Spindle; 18, Regulating Spring; 19, Spring Box; 20, Upper Stop; 21, Lower Stop; 22, Stop Screw; 23, Adjusting Handle.

REDUCING VALVE.

Fig. 320 is a photograph of the exterior of this valve connected to its pipe bracket, the construction and opera-

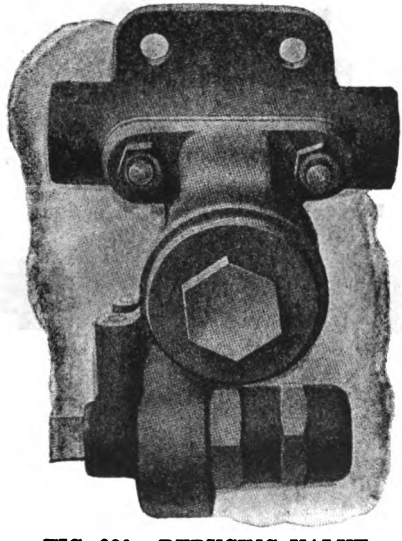

FIG. 320. REDUCING VALVE

tion of which is the same as the feed valve just described, with the exception of the adjusting feature, this valve being designed for single adjustment only.

THE PUMP GOVERNOR.

Fig. 321 shows a sectional view of this governor in its normal position. By reference to the piping diagram in Fig. 295 it will be noted that the connection B leads to the boiler; P to the air pump; MR to the main reservoir;

ABV to the automatic brake valve; FVP to the feed-valve pipe; W is the waste-pipe connection. Steam enters at B and passes by steam valve 26 to the connection P and to the pump. Air from the main reservoir flows

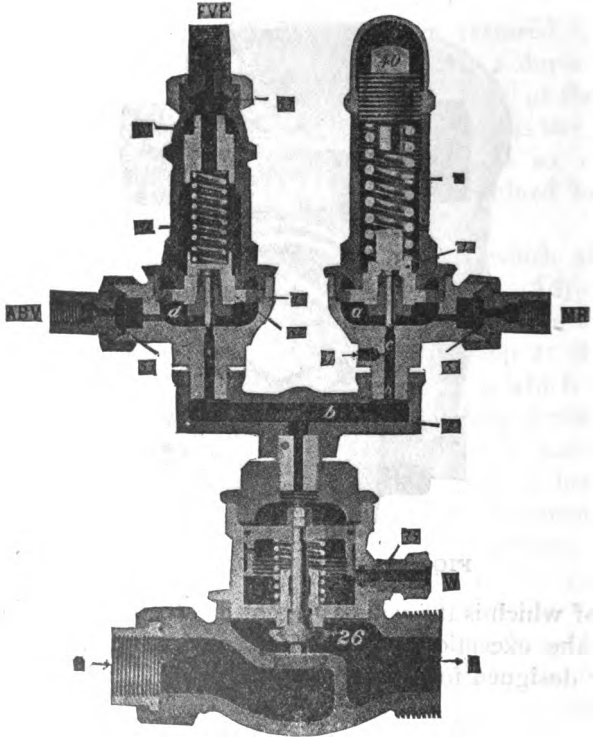

FIG. 321. PUMP GOVERNOR

through the automatic brake valve to the connection marked ABV into chamber *d* below diaphragm 52. Air from the feed-valve pipe enters at the connection FVP and passes to the chamber above the diaphragm, adding

to the pressure of regulating spring 51 in holding it down. As this spring is adjusted to a compression of about 20 pounds, the diaphragm will be held down until the main reservoir-pressure in chamber *d* exceeds the feed-valve pipe pressure by this amount. At such time, diaphragm 52 will raise, unseating its pin valve, and allow air to flow through port *b* to the chamber above the governor piston, forcing it downward, compressing its spring and seating steam valve 26. When main-reservoir pressure in chamber *d* is reduced, the combined spring and air pressures above the diaphragm force it down, seating its pin valve. The pressure in port *b*, and the chamber above the governor piston, which is always able to escape a little from the vent port *c*, will then escape to the atmosphere and allow the piston spring, and steam pressure below valve 26, to raise it, and the governor piston to the position shown. The connection from the main reservoir to chamber *d* is open only when the automatic brake-valve handle is in release, running or holding positions; in the other positions it is closed, at which times this governor head is cut out of action. The connection marked MR in the maximum pressure head is always in communication with the main reservoir, so that when the excess pressure head is cut out by the brake valve, this head controls the pump. When main-reservoir pressure in chamber *a* exceeds the compression of adjusting spring 41, diaphragm 42 will raise its pin valve and allow air to flow through port *b* to the chamber above the governor piston, controlling the pump as above described.

As each governor head has a vent port *c*, from which air escapes whenever pressure is present in port *b*, to avoid an unnecessary waste of air, one of these should be plugged.

To adjust this governor, remove the cap nut and turn adjusting nut 50 until the compression of spring 51 is equal to the excess of pressure desired.

QUESTIONS

949. In what respect does the new ET. Locomotive brake equipment differ materially from the standard automatic and straight air brake?

950. Can the ET. equipment be applied to any locomotive; no matter what kind of service?

951. Mention one of the principal advantages in connection with the design of the valves.

952. What are the three important advantages connected with its operation?

953. What can be said regarding the manipulation of the ET. brake, and the automatic and straight air brake?

954. In what position should the handle be, when not in use?

955. When it is desired to apply the locomotive and train brakes, how must the automatic brake valve handle be moved?

956. Describe the method of releasing the train brakes.

957. Describe the method of making an emergency application.

958. In order to make a smooth and accurate, two application passenger stop, what should be done?

959. Describe the proper method of making and releasing an independent application.

960. How should the independent brake be operated, when handling long trains on the road, or in switching service?

961. How ma the engine brakes only be released, and still leave the train brakes applied?

962. What should be done with the train brakes before detaching the engine?

963. Should the automatic brakes be used to hold a train or engine standing on a grade, for any length of time?

964. What is the safest way to hold a train standing on a grade?

965. Describe the proper method of stopping a descending train, and then holding it with the independent brake.

966. In what position should the independent brake valve handle be left when the engine is standing at a coal chute or water plug?

967. In what position should the handle of the automatic brake valve be placed in case of an accidental application—such as a bursted hose, or break in two of train?

968. In case there are two or more engines in a train, what should be done with the air equipment of each one, except the one from which the brakes are being handled?

969. What should be done with the brake equipment on the engine, before leaving the roundhouse?

970. Name the various parts of the equipment, and the purpose of each.

971. Name the different parts of the piping appertaining to the ET equipment.

972. What are the functions of the main reservoir cut-out cock?

973. In what two ways does the automatic brake valve receive air from the main reservoir?

974. How many connections has the distributing valve?

975. What are the functions of the first three of these connections?

976. For what purpose are the other two?

977. What is the important feature of the ET brake equipment?

978. Describe briefly what takes place within the distributing valve during an independent application.

979. What causes independent lap?

980. Between what two pressures does the application piston of the distributing valve vibrate?

981. How is the pressure maintained in the brake cylinders during an application?

982. How is independent release accomplished?

983. How may independent lap be again resumed?

984. What parts are brought into action during automatic operation?

985. Describe in general terms what occurs within the distributing valve during a service application of the automatic brake.

986. Upon what does the amount of pressure in the application chamber of the distributing valve depend?

987. What causes the position known as service lap?

988. Does the pressure maintaining feature also apply to automatic application?

989. Are the engine brakes released when the automatic brake valve is placed in release position?

990. What, then, must be done in order to release the engine brakes?

991. What takes place within the distributing valve during an emergency application?

992. What pressures are carried for high speed brake service?

993. Under these conditions, what pressure is attained in the application chamber?

994. What conditions are necessary to cause the parts of the valve to assume the position known as emergency lap?

995. What is the purpose of the double-heading pipe connection?

996. Describe the action of the safety valve.

997. How is this valve adjusted, and for what pressure?

998. In what respect does type H automatic brake valve differ from previous types?

999. When should the handle be kept in running position?

1000. What does service position give?

1001. For what purpose is lap position used?

1002. What is the purpose of release position?

1003. What results follow, when the valve is placed in holding position?

1004. Explain the difference between running and holding position.

1005. When is emergency position used?

1006. Of what type is the independent brake valve?

1007. In what position should this valve be carried when not in use?

1008. Describe the service position of this valve.

1009. When is lap position used for the independent brake valve?

1010. When is release position used?

1011. What type of valve, and for what purpose is the feed valve?

1012. Describe the construction and operation of the reducing valve.

1013. Describe the construction and operation of the pump governor.

1014. What is the "Dead Engine Feature"?

1015. Of what parts does it consist?

1016. How is the air for operating the brakes on a dead engine supplied?

1017. Describe briefly the route that the air takes under such conditions.

1018. What is the function of the strainer?

THE "DEAD ENGINE" FEATURE.

The "Dead Engine" feature shown in Fig. 295 is for the operation of the locomotive brakes when the pump on a locomotive in a train is inoperative through being broken down, or by reason of no steam. Fig. 322 shows the combined strainer, check valve, and choke fitting. As these parts are not required at other times, a cut-out cock is provided. This cock should be kept closed except under the conditions just mentioned. The air for operating the brakes on such a locomotive must then be supplied through the brake pipe from the locomotive operating the train brakes.

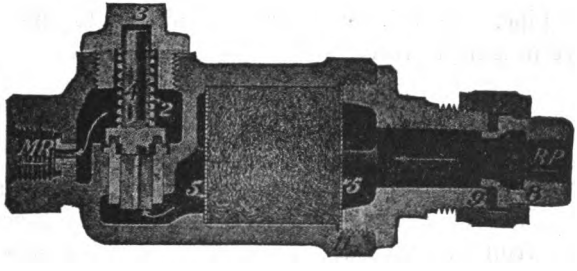

FIG. 322. COMBINED AIR STRAINER AND CHECK VALVE

With the cut-out cock open, air from the brake pipe enters at BP, Fig. 322, passes through the curled hair strainer, lifts check valve 4, held to its seat by a strong spring, passes through the choke bushing, and out at MR to the main-reservoir, thus providing pressure for operating the brakes on this locomotive. The double-

heading cock should be closed, and the handle of each brake valve should be in running position. Where absence of water in the boiler, or other reason, justifies keeping the maximum braking power of such a locomotive lower than the standard, this can be accomplished by reducing the adjustment of the safety valve on the distributing valve. It can also be reduced at will by the independent brake valve.

The strainer protects the check valve and choke from dirt. Spring 2 over the check valve insures this valve seating and, while assuring an ample pressure to operate the locomotive brakes, keeps the main-reservoir pressure somewhat lower than the brake-pipe pressure, thereby reducing any leakage from the former. The choke prevents a sudden drop in brake-pipe pressure and the application of the train brakes, as would otherwise occur with an uncharged main reservoir cut in to a charged brake pipe. In this, it operates similarly to the feed groove in a triple valve.

THE TYPE "K" FREIGHT TRIPLE VALVE.

Modern conditions have created new braking problems. The old and well-known (Type H) quick-action freight triple valve was designed to meet the requirements of the time when 50-car trains, 30-ton capacity cars, and moderate speeds were maximum conditions. But the increased train lengths, speeds, and car capacities of the present day, have demanded certain modifications to meet these, and anticipated, requirements.

The Westinghouse Air Brake Company has developed and perfected a new Quick-Action Freight Triple Valve, designated as Type "K," which facilitates train move-

ments, increases the factor of safety in handling trains, and reduces damage to lading and equipment, in so far as they are affected by air-brake operation.

The K triple valve embodies every feature of the old type, and in addition three new ones called the *Quick-Service, Retarded Release* and *Uniform Recharge.* It not only works in perfect harmony with the old valves, but greatly improves the action of the latter when they are mixed in the same train. They have many parts in common, are interchangeable, and the old can be converted into the new without the loss of many parts.

The *Quick-Service* Feature, which produces a quick serial operation of the brakes in service applications, has been obtained by utilizing the well known principle of quick-action in emergency applications, by which each triple valve augments the brake-pipe reduction by discharging brake-pipe air into its brake cylinder. The essential difference is that in emergency, the maximum braking power is always obtained with both the old and new valves, while with the new valve, the power of its quick-service application is always under complete control, and is governed by the reduction made at the brake valve. The result is that the quick-service feature insures the prompt and reliable response of every brake; eliminates the undesirable use of emergency applications where a flag, an unforeseen danger ahead, or the need of making an accurate stop, frequently necessitates such an application with the old standard freight-brake equipment; reduces the possible loss of air due to flowing back through the feed grooves from the auxiliary reservoir to the brake pipe, or by the leakage grooves in the cylinders; and gives a more uniform application of the brakes throughout the train.

The *Retarded-Release* Feature, which insures practically a *simultaneous* release of all brakes, has been effected by automatically restricting the exhaust of air from the brake cylinders at the head end of the train, and allowing all others to release freely. To obtain this result requires merely the usual correct method of operating the brake valve, the retarded release being due to the quick and considerable rise in brake-pipe pressure which the release position of the brake valve can cause for about 25 or 30 cars from the locomotive.

The *Uniform Recharge* of the auxiliary reservoirs throughout the train is obtained by the fact that when the triple valve is in retarded-release position, the charging ports between brake pipe and auxiliary reservoir are automatically restricted. As long as the release of brake-cylinder exhaust is retarded, the recharge is restricted, and since the one feature depends upon the other, the restricted recharge operates only on the first twenty-five or thirty cars back of the engine, the remaining brakes recharging normally, thus insuring practically a simultaneous recharge of all brakes in the train. This feature not only avoids the overcharge of the auxiliary reservoirs on the front cars and the subsequent undesired reapplication of their brakes, but by drawing less air from the brake pipe permits the increase in brake-pipe pressure to travel more rapidly to the rear for releasing and recharging those brakes.

The new valve is at present manufactured in two sizes, the "K-1" for use with 8-inch freight-car brake cylinders, corresponding with the H-1 (F-36), and the "K-2" with 10-inch freight-car brake cylinders, corresponding with the H-2 (H-49). The K-1 will bolt to the same reservoir as the F-36, and the K-2 as the H-49. Each valve

is marked with its designation on the side of the valve body, and the K-2 may be distinguished from the K-1 by the fact that it has *three,* as compared with *two,* bolt holes in the reservoir flange. Also, in order to distinguish the type K valves from the old standard type, their exterior being similar when they are attached to the

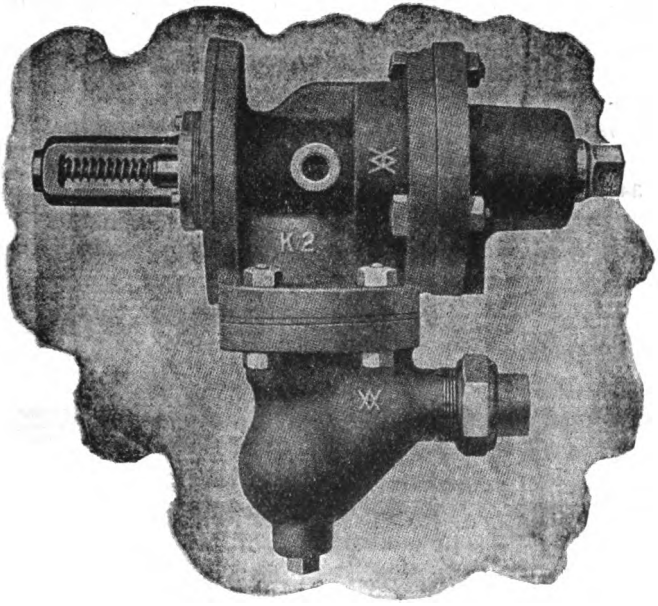

FIG. 323. THE TYPE "K" FREIGHT TRIPLE VALVE

auxiliary reservoir, a lug is cast on the top of the valve body, as shown in Fig. 323. This enables anyone to locate them at once.

Fig. 324 is a vertical cross section of this valve, and the names of the various parts are as follows:

2, Valve Body; 3, Slide Valve; 4, Piston; 5, Piston-Packing Ring; 6, Slide-Valve Spring; 7, Graduating Valve; 8, Emergency Piston; 9, Emergency-Valve Seat; 10, Emergency Valve; 11, Emergency-Valve Rubber Seat; 12, Check-Valve Spring; 13, Check-Valve Case; 14, Check-Valve-Case Gasket; 15, Check Valve; 16, Air Strainer; 17, Union Nut; 18, Union Swivel; 19, Cylinder Cap; 20, Graduating-Stem Nut; 21, Graduating Stem;

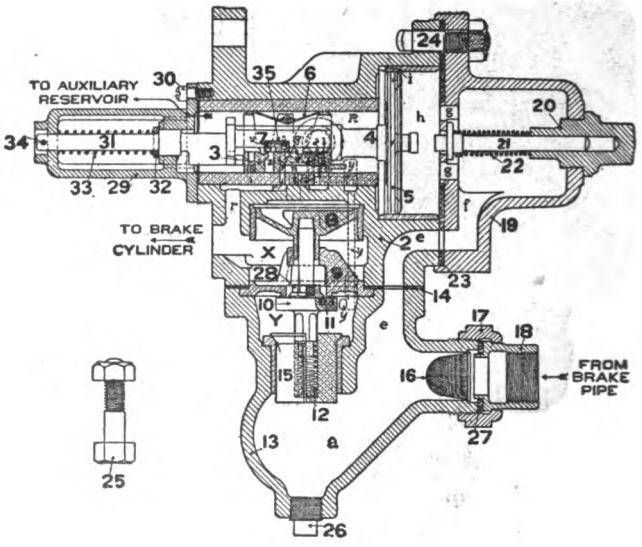

FIG. 324. THE K-2 TRIPLE VALVE

22, Graduating Spring; 23, Cylinder-Cap Gasket; 24, Bolt and Nut; 25, Triple-Valve Cap Screw; 26, Drain Plug; 27, Union Gasket; 28, Emergency-Valve Nut; 29, Retarding-Device Bracket; 30, Retarding-Device Screw; 31, Retarding-Device Stem; 32, Retarding-Device

Washer; 33, Retarding-Device Spring; 34, Retarding-Device-Stem Pin; 35, Graduating-Valve Spring.

Figure 325 shows the relative position of the ports and cavities in the slide valve, graduating valve, and slide-valve seat of the K-2 Triple Valve. As it is difficult to show all of these in a single section, diagrammatic cuts of the valve in each of the principal positions have been used, all ports and passages having been so arranged as to place them in one plane. In preparing these cuts, the actual proportion, and mechanical construction of the valve has been disregarded for the purpose of making the connections of ports, and operation, more easily understood.

EXPLANATION OF FIGURES 324 AND 325.

Referring to Figure 324, the branch from the brake pipe connects at union swivel 18. The retarding-device bracket 29 projects into the auxiliary reservoir, and by its construction free communication exists between the auxiliary reservoir and chamber R, in which the slide-valve 3 and graduating valve 7 operate. The retarding-device stem 31, through its extension into chamber R, and the action of its spring 33, forms the stop against which the stem of piston 4 strikes when it moves to the release position (from right to left in the cut, it being shown in full-release position).

The opening marked "To Brake Cylinder" comes opposite one end of the tube which leads through the auxiliary reservoir to the brake cylinder, when the valve is bolted in place on the end of the auxiliary reservoir. This opening in the triple valve leads to chamber X

FACE VIEW

GRADUATING VALVE.

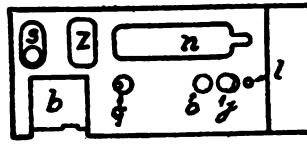

FACE VIEW

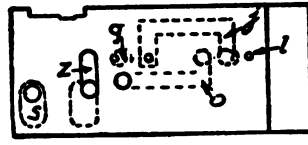

TOP VIEW

SLIDE VALVE.

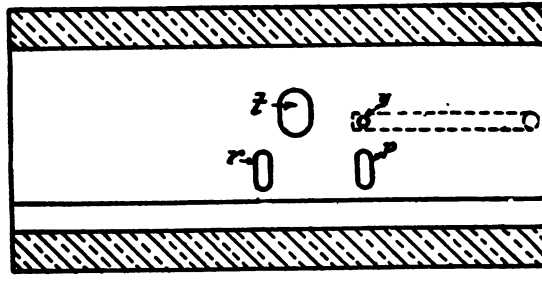

SLIDE VALVE BUSH.

FIG. 325. SLIDE VALVE, GRADUATING VALVE, AND SLIDE-VALVE SEAT OF K-2 TRIPLE VALVE

over the emergency valve 10, and under the emergency piston 8. Also, it leads through port *r* to the seat under slide valve 3 (Fig. 325). The emergency piston 8 and the parts below it are the same as in the older quick-action freight triple valve. Port *y* (shown by dotted lines) connects chamber Y, between check valve 12 and emergency valve 10, with port *y* in the valve seat (Fig. 325).

Port *t* connects the slide-valve seat with the chamber above emergency piston 8. Port *p* is the exhaust port to the atmosphere. Port *j* in the slide valve begins at the face, as shown by the top view, Fig. 325, and passes around other ports in the valve to a smaller opening in the top. (NOTE:—This port *j* does not exist in the K-1 Triple Valve, as will be explained later.) Port *o* is similarly arranged, except that openings in top and bottom are alike in size. Port *q* runs directly through the slide valve, but is smaller at the top than at the face of the valve, and the smaller part is out of center with the larger part. Ports *s* and *z* run through the valve and connect with cavities in the face; port *z* also has a cavity at the top.

The face view of the graduating valve shows that it has a small cavity *v*. This valve is of the slide-valve type, and it seats on the top of the slide valve, where it controls the upper ends of ports *z*, *q*, *o* and *j*. The purpose of the cavity *v* is to connect the upper ends of ports *o* and *q* in a service application, as explained in detail later.

As shown by the face view of the slide valve, *n* is a long cavity having a narrow extension at the right hand end. This cavity connects the ports through which the air escapes from the brake cylinder in releasing. Port

b is cut diagonally from the face till it just cuts into the edge, at the top of the slide valve. It admits auxiliary-reservoir pressure to port *t* in an emergency application.

With this explanation, and by occasional reference from the diagrammatic views, to those in Fig. 325, the same ports being lettered alike, a clear understanding will be obtained of both the operation and actual arrangement of ports of the triple valves.

FULL RELEASE AND CHARGING POSITION.

Fig. 326 is a diagrammatic view of the triple valve in this position. Air from the brake pipe flows through passage *e*, cylinder cap *f*, and ports *g* to chamber *h;* thence through feed groove *i*, now open, to chamber R above the slide valve, which is always in free communication with the auxiliary reservoir. The feed groove *i* is of the same dimension as that of the old standard H-1 (F-36) triple valve, which is designed to properly charge the auxiliary reservoir of an 8-inch brake cylinder, and prevent any appreciable amount of air from feeding back into the brake pipe from the auxiliary reservoir during an application. For this reason, the feed groove of the K-2 triple valve is made the same size as the K-1, so that it is necessary in the K-2 triple, to increase the charging port area, through which the air can feed into the auxiliary reservoir, sufficiently to enable it to handle the greater volume of the auxiliary reservoir of a 10-inch brake cylinder. In order to do this, the small port *j* is added to the slide valve of the K-2 triple valve only; this port registers with port *y* in the slide-valve seat, when in the full release position. Air then passes from chamber Y, through ports *y* and *j* to chamber R, and the aux-

iliary reservoir. Brake-pipe air in *a* raises check valve 15 and supplies chamber Y with air as fast as it is required. Port *j* is so proportioned that the rate of charging the auxiliary reservoir of a 10-inch brake cylinder is made practically the same as that of the 8-inch, which in full

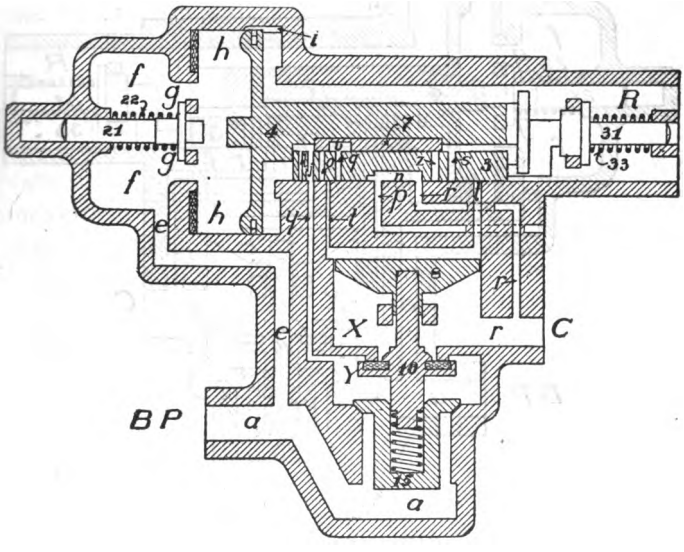

FIG. 326. FULL-RELEASE AND CHARGING POSITION

release is fed through the feed groove *i* only. In the following description, the K-2 triple valve only is referred to; the operation of the K-1 is exactly the same except for the absence of port *j*.

Air flows from the brake pipe to the auxiliary reservoir until their pressures become equal, when the latter is then fully charged.

QUICK-SERVICE POSITION.

To make a service application of the brakes, air pressure is gradually reduced in the brake pipe, and thereby in chamber *h*. As soon as the remaining pressure in the

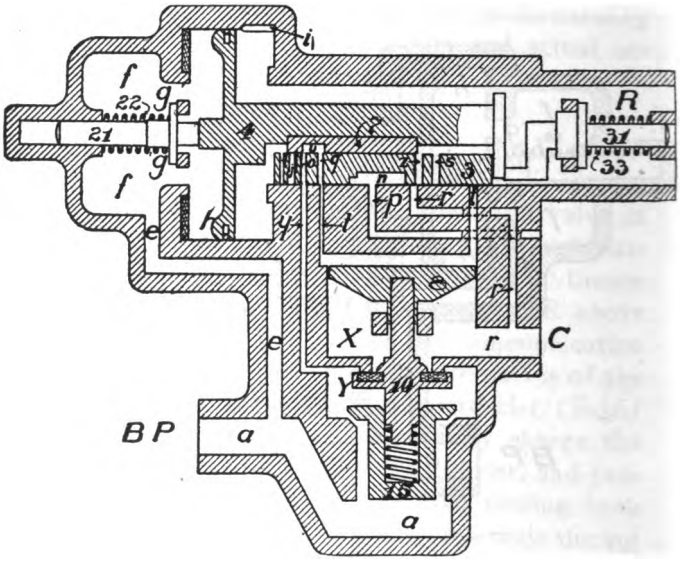

FIG. 327. QUICK SERVICE POSITION

auxiliary reservoir and chamber R becomes enough greater than that in chamber *h*, to overcome the friction of the piston 4 and graduating valve 7, these two move to the left until the shoulder on the end of the piston stem strikes against the right-hand end of the slide valve, when it also is moved to the left until the piston strikes the graduating stem 21, which is held in its place by the compression of the graduating spring 22. The parts of the valve are then in the position shown in Fig. 327.

The first movement of the graduating valve closes the feed groove *i*, preventing air from feeding back into the brake pipe from the auxiliary reservoir, and also opens the upper end of port *z* in the slide valve, while the movement of the latter closes the connection between port *r* and the exhaust port *p*, and brings port *z* into partial registration with port *r*, in the slide valve seat. Auxiliary-reservoir pressure then flows through port *z* in the slide valve, and port *r* in the seat to the brake cylinder.

At the same time, the first movement of the graduating valve connected the two ports *o* and *q* in the slide valve, by the cavity *v* in the graduating valve, and the movement of the slide valve brought port *o* to register with port *y* in the slide-valve seat, and port *q* with port *t*. Consequently, the air pressure in chamber Y flows through ports *y*, *o*, *v*, *q* and *t*, thence around the emergency piston 8, which fits loosely in its cylinder, to chamber X and the brake cylinder. When the pressure in chamber Y has reduced below the brake-pipe pressure remaining in *a*, the check valve raises, and allows brake-pipe air to flow by the check valve and through the ports above mentioned to the brake cylinders. The size of these ports is so proportioned that the flow of air from the brake pipe to the top of emergency piston 8, is not sufficient to force the latter downward, and thus cause an emergency application, but at the same time takes considerable air from the brake pipe, thus increasing the rapidity with which the brake-pipe reduction travels through the train.

With the ordinary quick action triple valve in a service application, all of the brake-pipe reduction has to be made at the brake valve, and the resulting drop in pressure passes back through the train at a rate depend-

ing on its length, size of brake pipe, number of bends and corners, etc., which cause friction and resistance; also a much heavier application of head than of rear brakes is caused at the beginning of the application, thereby running the slack in, which is liable at low speeds to be followed by the slack running out suddenly when the rear brakes do apply, causing loss of time and difficulty in making quick slow downs and accurate stops, and, with very long trains, results in such serious losses through leakage grooves, and feed grooves as to lose much braking power and even prevent some brakes from applying. With this new triple valve, only a small part of the reduction is made at the brake valve, while each triple acts momentarily as a brake valve to increase the reduction under each car, thereby rendering the resistance and friction in the brake pipe of much less effect, and hastening the application throughout the train. This is called the "Quick-Service" feature, and by means of it the rapidity of a full service application on a 50-car train is increased about fifty per cent. The rapid reduction of brake-pipe pressure moves the main piston 4 quickly to the service position, and cuts off any flow back from the auxiliary reservoir through the feed groove to the brake pipe; it rapidly drives the brake-cylinder piston beyond the leakage groove, and prevents loss of air through it; and yet permits applying with as moderate a brake force as desired. It also greatly reduces the brake-pipe reduction necessary at the brake valve for a certain brake-cylinder pressure, due to the fact (1) that part of the reduction takes place at each triple valve, and (2) that the air taken from the brake pipe into the brake cylinder gives a little higher pressure than if the auxiliary-reservoir pressure alone were admitted, thus re-

quiring a smaller brake-pipe reduction for the same cylinder pressure.

FULL-SERVICE POSITION.

With short trains, the brake-pipe volume, being comparatively small, will reduce more rapidly for a certain reduction at the brake valve than with long trains.

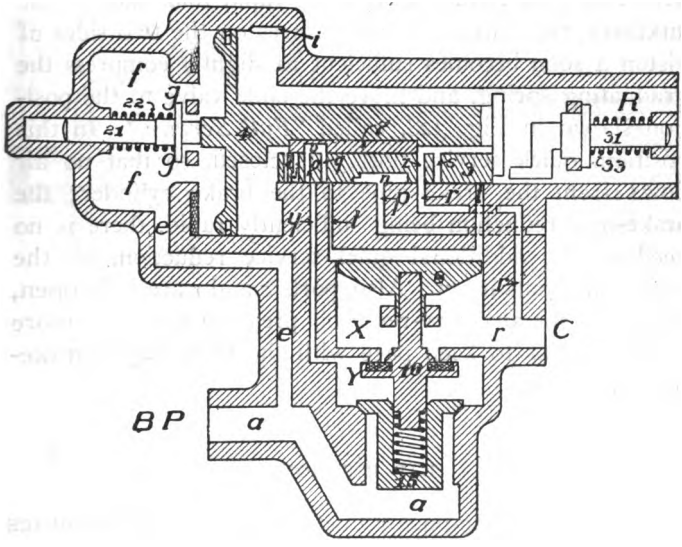

FIG. 328. FULL SERVICE POSITION

Under such circumstances the added reduction at each triple valve by the quick-service feature, might bring about so rapid a brake-pipe reduction as to cause quick action and an emergency application, when only a light application was intended. (The emergency application is explained later.) But this is automatically prevented

by the triple valve itself. From Fig. 327 it will be noted that in the quick-service position, port *z* in the slide valve and port *r* in the seat do not fully register. Nevertheless, the opening is sufficient to allow the air to flow from the auxiliary reservoir to the brake-cylinder with sufficient rapidity to reduce the pressure in the auxiliary reservoir as fast as the pressure is reducing in the brake pipe, when the train is of considerable length. But if the brake-pipe reduction is more rapid than that of the auxiliary, the difference in pressures on the two sides of piston 4 soon becomes sufficient to slightly compress the graduating spring, and move the slide valve to the position shown in Fig. 328, called *"Full Service."* In this position, quick service port *y* is closed, so that no air flows from the brake pipe to the brake cylinder; the brake-pipe reduction being sufficiently rapid, there is no need of the additional quick-service reduction, so the triple valve cuts it out. Also, ports *z* and *r* are fully open, and allow the auxiliary-reservoir pressure to reduce more rapidly, so as to keep pace with the more rapid brake-pipe reduction.

LAP POSITION.

When the brake-pipe reduction ceases, air continues to flow from the auxiliary reservoir through ports *z* and *r* to the brake cylinder, until the pressure in the chamber R becomes enough less than that of the brake pipe to cause piston 4, and graduating valve 7 to move to the right until the shoulder on the piston stem strikes the left-hand end of slide valve 3. As the friction of piston and graduating valve is much less than that of the slide valve, the difference in pressure which will move the piston and

the graduating valve, will not be sufficient to move all three; consequently, the piston stops in the position shown in Fig. 329. This movement has caused the graduating valve to close port *z*, thus cutting off any further flow of air from the auxiliary reservoir to the brake cylinder. Consequently, no further change in air pressures can occur, and this position is called "Lap," because all ports are *lapped*,—that is, closed.

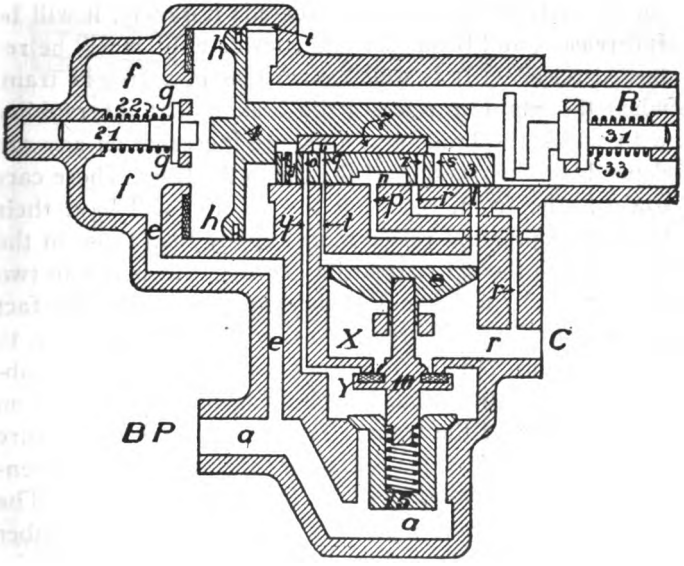

FIG. 329. LAP POSITION

If it is desired to make a heavier application, a further reduction of the brake-pipe pressure is made, and the operation described above repeated, until the auxiliary reservoir and brake cylinder pressures become equal,

after which any further brake-pipe reduction is only a waste of air. About twenty pounds brake-pipe reduction will give this equalization.

RETARDED RELEASE AND CHARGING POSITION.

The K triple valve has two release positions, full-release and retarded-release. Which one its parts will move to when the train brakes are released, depends upon how the brake-pipe pressure is increased; if slowly, it will be full release, and if quickly and considerably, it will be retarded-release. It is well known that in a freight train, when the engineer releases the brakes, that the rapidity with which the brake-pipe pressure increases on any car depends on the position of the car in the train. Those cars towards the front, receiving the air first will have their brake-pipe pressure raised more rapidly than those in the rear. With the old standard apparatus, this is due to two things: (1) the friction in the brake pipe; (2) the fact that the auxiliary reservoirs in the front at once begin to recharge, thus tending to reduce the pressure head by absorbing a quantity of air, and holding back the flow from front to rear of the train. The retarded-release feature of this new triple valve overcomes the second point mentioned, taking advantage of the first while doing so. The friction of the brake pipe causes the pressure in chamber *h* to build up more rapidly on triple valves towards the front than those in the rear. As soon as its pressure is enough greater than the auxiliary-reservoir pressure, remaining in chamber R after the application above described, to overcome the friction of piston, graduating valve, and slide valve, all three are moved toward the right until the piston stem strikes the retarding-device stem, 31.

The latter is held in position by the retarding-device spring, 33. If the rate of increase of the brake-pipe pressure is small, as, for example, when the car is near the rear of the train, the triple valve parts will remain in this position, as shown in Fig. 326, the brakes will release and the auxiliary reservoirs recharge as described under

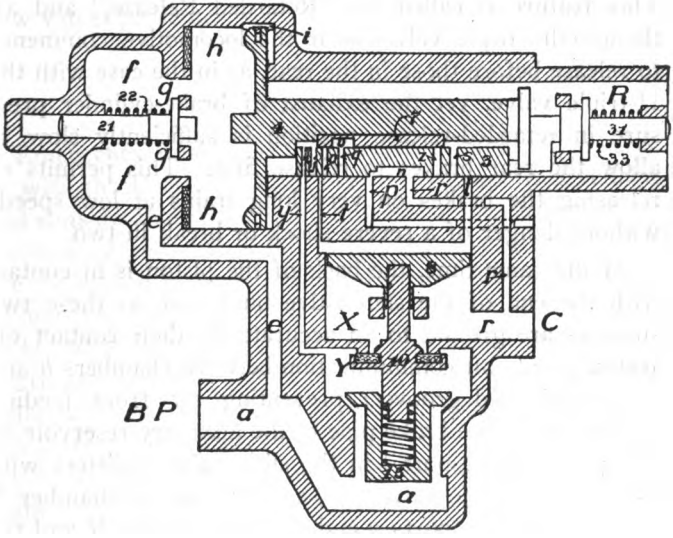

FIG. 330. RETARDED-RELEASE POSITION

"FULL RELEASE AND CHARGING." If, however, the triple valve is near the head of the train, and the brake-pipe pressure builds up more rapidly than the auxiliary reservoir can recharge, the excessive pressure in chamber *h* will cause the piston to compress retarding-device spring, 33, and move the triple-valve parts to the position shown in Fig. 330.

Exhaust cavity *n* in the slide valve now connects port *r* leading to the brake cylinder, with port *p* to the atmosphere, and the brake will release; but as the small extension of cavity *n* (see Fig. 325) is over port *p*, discharge of air from the brake cylinder to the atmosphere is quite slow. In this way the brakes on the front end of the train require a longer time to release than those on the rear. This feature is called the "Retarded Release," and although the triple valves near the locomotive commence to release before those in the rear, as in the case with the H-triple valve, yet the exhaust of brake-cylinder pressure in retarded-release position is sufficiently slow to allow the rear brakes to release first. This permits of releasing the brakes on very long trains at low speeds without danger of a severe shock or break in two.

At the same time, the back of the piston is in contact with the end of the slide-valve bush and, as these two surfaces are ground to an accurate fit, their contact effectually cuts off communication between chambers *h* and R through feed groove *i*, preventing air from feeding through from the brake pipe to the auxiliary reservoir by this path. Also, port *l* in the slide valve registers with port *y* in the slide valve seat, and pressure in chamber Y can flow through ports *y* and *l* to the chamber R and the auxiliary reservoir. Chamber Y is supplied with air under these circumstances by the check valve 15 raising and allowing brake-pipe air to flow past it. The area of port *l* is about half that of feed groove *i*, so that the rate that the auxiliary reservoir will recharge is much less than when the triple valve is in the full-release position.

As the auxiliary-reservoir pressure rises, and the pressures on the two sides of piston 4 become nearly equal, retarding-device spring 31 forces the piston, slide valve,

graduating valve, and retarding device stem back to the full release position shown in Fig. 326, when the remainder of the release and recharging will take place as described above under "Full Release and Charging."

These features of the new valve are always available, even when mixed in trains with the old standard, the beneficial results being in proportion to the number of new valves present.

EMERGENCY POSITION.

Emergency Position is the same with the K triple valve as with the H type. Quick action is caused by a sudden and considerable reduction in brake-pipe pressure, no matter how caused. This fall in brake-pipe pressure causes the difference in pressures on the two sides of piston 4 to increase very rapidly, so that the friction of the piston, slide valve and graduating valve is quickly and greatly overcome, and they move to the left with such force that when the piston strikes the graduating stem, it compresses graduating spring 22, forcing back the stem and spring, until the piston seats firmly against the gasket 23, as shown in Fig. 331. The movement of the slide valve opens port *t* in the slide-valve seat, and allows auxiliary reservoir pressure to flow to the top of emergency piston 8, forcing the latter downward and opening emergency valve 10. The pressure in chamber Y, being instantly relieved, allows brake-pipe air to raise the check valve 15 and flow rapidly through chambers Y and X to the brake cylinder, until brake-cylinder, and brake-pipe pressures equalize, when both check valve and emergency valve are forced to their seats by the spring in the former, preventing the air in the cylinders from escaping back into the

brake pipe again. At the same time port *s* in the slide valve registers with port *r* in the slide-valve seat, and allows auxiliary-reservoir pressure to flow to the brake cylinder. But the size of ports *s* and *r* is such that very little air gets through them before the brake pipe has stopped venting into the brake cylinder. This sudden discharge of brake-pipe air into the brake cylinder has the same effect on the next triple valve as would be caused

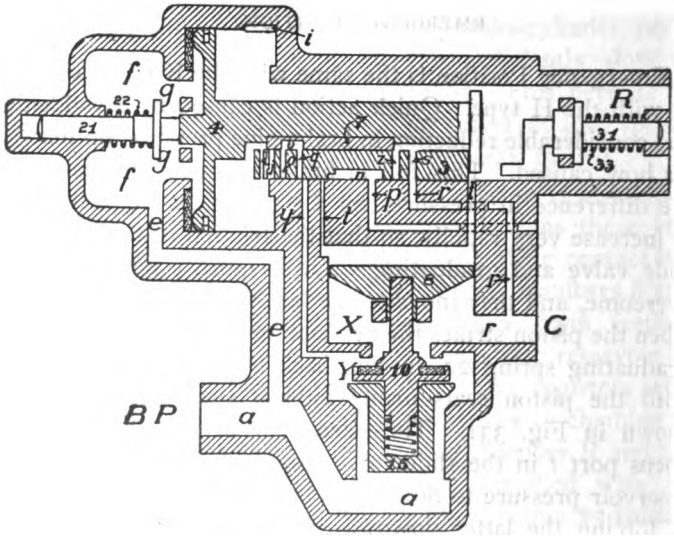

FIG. 331. EMERGENCY POSITION

by a similar discharge of brake-pipe air to the atmosphere. In this way each triple valve applies the next, thus giving the quick and full application of all brakes, made heavier than full service application through the greater amount of brake-pipe air admitted to the brake cylinders.

The rapidity with which the brakes apply throughout the train is so much increased, that in a 50-car train it requires less than three seconds; the brake-cylinder pressure is also increased approximately twenty per cent.

The release after an emergency is effected in exactly the same manner as after a service application, but requires a longer time, owing to the higher brake-cylinder pressures and lower brake-pipe pressures.

To change a standard type H triple valve to the type K, it is necessary to add the retarded-release feature, and to make the necessary changes in the controlling valves, body, and check-valve case.

MANIPULATION.

No special instructions are required by the engineers to handle trains partially, or wholly fitted with the K triple valve. The automatic brake valve should be handled as good practice requires with the H triple valve. Some of the most important details are as follows:

Make the terminal brake tests, and check the results indicated by noting how well the brakes hold in the first running application, and be governed accordingly in subsequent applications.

Before attempting to release have an ample excess pressure for the length of train, and in releasing leave the handle of the automatic brake valve in release position until the rear brakes have had time to release.

As return to running position will cause triple valves in retarded-release position to change to full-release position, the brake-valve handle should not be moved from release too soon. However, with short trains the usual early return to running position will prevent unnecessary retardation of release.

QUESTIONS

1019. What are the principal advantages possessed by the Type "K Triple Valve over the older Types"?

1020. Describe the Quick service feature.

1021. How is this feature produced?

1022. What conditions are secured by the Retarded release feature?

1023. How are the auxiliary reservoirs uniformly recharged throughout the train?

1024. How many sizes of the K valve are at present made?

1025. How may the K-2 valve be distinguished from the K-1?

1026. Mention the principal disadvantages attending a service application with the ordinary quick action triple valve.

1027. Are these conditions present with the K Triple Valve?

1028. Describe briefly full service position.

1029. What conditions are present with lap position?

1030. How are the two release positions of the K Triple Valve designated?

1031. What conditions control the position of full release?

1032. How is retarded release accomplished?

1033. Is there any difference in emergency position, whether with the K Triple Valve, or with the H Type?

1034. What length of time is required for an application throughout a train of 50 cars with the K Triple Valve?

1035. What changes are necessary to convert a type H Triple Valve to Type K?

1036. What are three important rules to be observed by engineers in the handling of trains partially, or wholly equipped with the K Triple Valve?

WALSCHAERT VALVE GEAR—GENERAL DESCRIPTION.

The motion of the valve, as shown in Fig. 332 is derived both from the crosshead, and the eccentric crank from a driving axle. The crosshead connection imparts the lap and lead at the extremities of the stroke, when the eccentric crank is in its middle position. The eccentric crank in this position imparts its fastest movement to the valve to give a very quick opening. The crosshead motion in advancing from the dead point effects an approximate uniformity in the combined motion given to the valve, as if it was derived from a single crank or eccentric set with an angle of advance corresponding to the lap and lead. The valve motion may therefore be graphically illustrated in the same manner as that of the Stephenson motion, with a circle representing the path of the eccentric, the diameter of which is equal to the travel of the valve, and the valve movements may be determined in the same way by any of the well-known methods of Professor Zeuner and others, as illustrated on another page. It will be observed that the only apparent variation due to this gear is that brought about by the invariable lead.

The Walschaert motion, as usually constructed, does not lend itself as freely to adjustment as does the Stephenson motion with independent eccentrics, and for this reason it is not as liable to get out of adjustment. It must be correctly laid out in the design and correctly fitted up. The importance of this cannot be overestimated. The

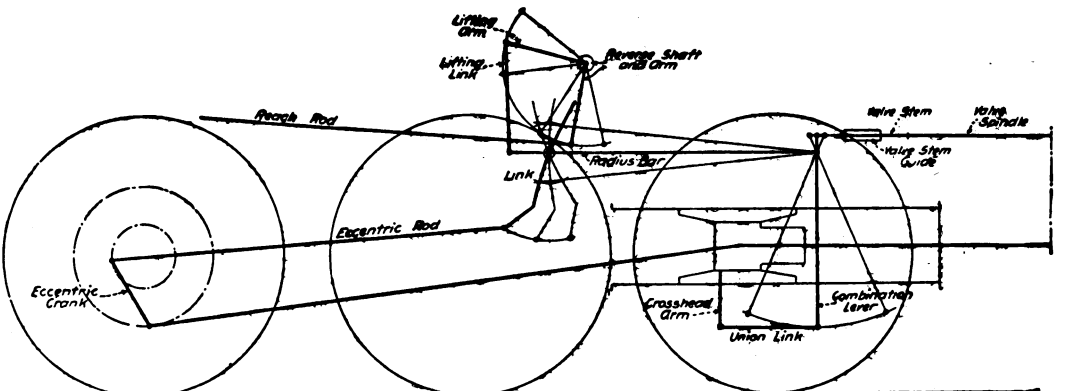

FIG. 332. OUTLINE OF WALSCHAERT VALVE GEAR AS APPLIED TO COMPOUND LOCOMOTIVE—BALTIMORE & OHIO RAILROAD

various points must be carefully plotted in order to give the best results in the combination movement of the parts of the motion. The movements of the motion involve such complications in plotting as to render the complete plotting of all too laborious for every new design, and for this reason the use of an adjustable model is very desirable in designing this gear. However, with complete knowledge of the nature of the gear, simple methods and formulæ may be used to determine the locations of the various points covering the motion. One object of this description is to avoid the necessity of a model except to verify the results.

To entirely overcome the irregularities inherent in all motions transformed from circular into lineal, cannot for practical reasons be expected, but the errors may be reduced to such an extent that they do not affect either the power or economy of the locomotive. This remark is made to forestall the inference that the accuracy of the Walschaert motion as to the cut-off points is not superior to the Stephenson motion when the latter is turned out of the shop.

In the construction of the Walschaert gear the desired travel of the valve, the lead and the maximum cut-off which determines the lap of the valve, are selected. The stroke of the piston being given, the combination lever is proportioned so that a motion equal to the lap and lead is given to the valve when the crosshead is moved from one end of the stroke to the other. The link may be made of any approved design, and is so located that the radius bar will have a length of at least eight times (ten or twelve times is better) the travel of the link block, and the radius of the link should be equal to the length of the radius bar.

For outside admission valves the radius bar is attached to the combination lever between the valve stem and the crosshead connections, and for inside admission (piston valves) it is attached above the valve stem. The fulcrum of the link should lie as nearly as practicable upon a line drawn through the union of the radius-bar and combination lever, parallel with the center line of the valve stem. The suspension point of the lifter should have a locus which causes the link block to travel as nearly as practicable on a chord of the arc described by any point of the link, wherever the block happens to be when the link is swung into one of its extreme positions.

This is most closely approached by a lifter through which the radius bar slides, and does not swing with the link. A properly suspended hanger will accomplish practically the same result, though the slip of the link bar will be somewhat more in the back than in the forward motion, but as the suspension point cannot be made to follow the theoretical locus, it should be made to do so as nearly as possible by favoring the position of the most commonly used cut-offs.

In locating the longitudinal position of the link fulcrum, consideration should also be given to the length of the eccentric rod, which should have a minimum length of 3½ times the eccentric throw, and should be made as long as circumstances will permit, with an approximate equal length of the radius and eccentric rods. The point of connection between the eccentric rod and the link should be as near the center line of motion of the main rod as this correction for rod angularities will permit, but this is often accompanied with the requirement of excessive eccentric throw. In such cases a compromise must be made to raise this point. The fore and aft position of this

point relative to the tangent of the link arc must also be determined with reference to the angularity of the eccentric and main-rods, so that the link is exactly in its central position when the piston is at either end of the stroke. The angles through which the link swings on both sides of its central position should be as nearly as practicable equal, but this is subordinate to other conditions. Attention should be paid to the effect of the angularity of the main connecting rod upon the cut-off, to reduce this to a minimum, this having an effect upon determining the locus of the suspension point of the lifting link, as well as that of the eccentric rod connection to the link.

It is evident that a proper design of Walschaert gear can only be laid out by a skilled draughtsman. In maintenance, care is required that all parts should preserve their original forms and position, and this should be checked by verifying the valve movements through turning the main driving wheels before the locomotive goes into service.

The chief point of difference between the Walschaert and Stephenson motions is that the former gives to the valve a constant lead at all cut-offs, whereas the latter produces an increase of lead which becomes excessive at short cut-offs.

METHOD OF ADJUSTING VALVES WITH WALSCHAERT GEAR.

The lap and lead are determined by the proportion of the arms of the combination lever and the stroke of the piston. The amount is found by turning the engine from one dead center to the other center in any cut-off position.

1. The motion must be adjusted with the cranks on

the dead centers, by lengthening, or shortening the eccentric rods until the link takes such a position as to impart no motion to the valve when the link block is moved from its extreme forward to its extreme backward position. Before this change in the eccentric rod is resorted to, the length of the valve stem should be examined, as it may be of advantage to plane off, or line under, the foot of the link support which might correct the lengths of both rods, or at least only one of these should need to be changed.

2. The difference between the two positions of the valve on the forward and back centers is the lap and lead doubled, and cannot be changed, except by changing the leverage relations of the combination lever.

3. A given lead determines the lap, or a given lap determines the lead, and it must be divided for both ends as desired, by lengthening or shortening the valve spindle.

4. Within certain limits this adjustment may be made by shortening or lengthening the radius bar, but it is desirable to keep the length of this bar equal to the radius of the links, in order to meet the requirements of the first condition.

5. The lead may be increased by reducing the lap, and the cut-off point will then be slightly advanced. Increasing the lap introduces the opposite effect on the cut-off. With good judgment these quantities may be varied to offset the irregularities inherent in transforming rotary into lineal motions.

6. Slight variations may be made in the cut-off points as covered by the previous paragraph, but an independent adjustment cannot be made except by shifting the location of the suspension point, which is preferably determined by a model.

METHOD OF LAYING OUT WALSCHAERT GEAR.

Having presented a general outline of the gear, we may proceed in determining the more important points necessary to obtain a successful motion of the valve, and, as previously stated, the stroke of the engine is given, and the travel, and lap and lead of the valve are selected to suit a desired cut-off. We have first to find the proportions of the combination lever. By designating the lap and lead with a letter C, the crank Radius with R, the crosshead end of the combination lever with *L*, and the valve end of the same with V, we have R:C=L:V, or $V=\frac{CL}{R}$, with the connection F of the radius bar as a fulcrum. The length of the combination lever must be determined from the height of the valve stem over the piston rod, and a convenient angle of oscillation of 45° to 50°, which should not exceed 60°.

We have next to find the required travel of point F, Fig. 333, to obtain the desired valve travel, which for convenience sake is taken on one side of the center position, or half its total travel in full gear, and which we will designate b, when we have:

$b=\frac{R\sqrt{a^2-c^2}}{R+c}$ for outside admission, and $b=\frac{R\sqrt{a^2-c^2}}{R-c}$ for inside admission valves, where a is the radius of an eccentric that would give the required travel of the valve, and c is as given above.

This may be laid out graphically as in Figs. 334 and 335, when *a* is equal to one-half the travel of the valve and R and *c* the same as in the above formulæ.

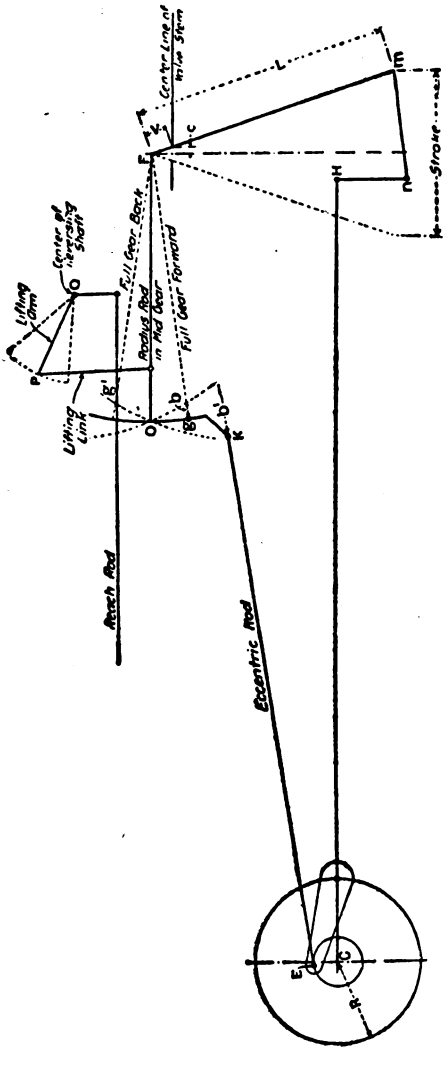
Center Line of Valve Stem
Stroke
Center of Reversing Shaft
Lifting Arm
Lifting Link
Full Gear Back
Full Gear Forward
Radius Rod in Mid Gear
Reach Rod
Eccentric Rod
$R\sqrt{a^2-c^2}$

FIG. 333

With the limited amount it is advisable to allow in raising or lowering the link block in reversing the motion, we can without practical error consider the half movement of the link block g to be the same as that of point F, and by limiting the angle of the swing of the

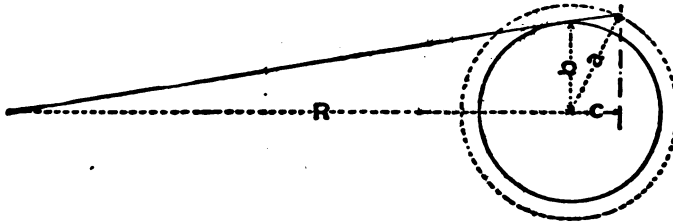

FIG. 334

link to a maximum of 45°, we get the raise or depression of the radius bar and link block $Og = \frac{b}{\tan. d}$, where O is the link fulcrum and d = half the angle of the swing of the link.

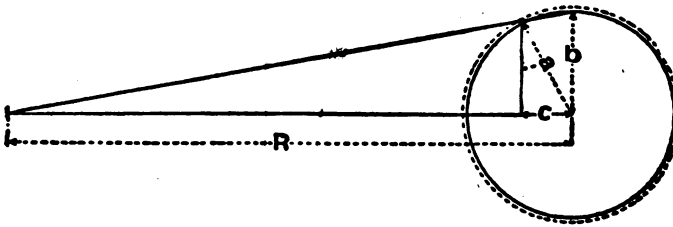

FIG. 335

The location of the link and eccentric rod connecting point K, Fig. 333, cannot be determined with any practicable formula, but must, as already stated, be found by plotting to meet the requirements of the different cut-

offs and corresponding crank positions. The same is also the case with determining the locus for the suspension point P of the lifting link, and in these two locations lies the principal success of the gear.

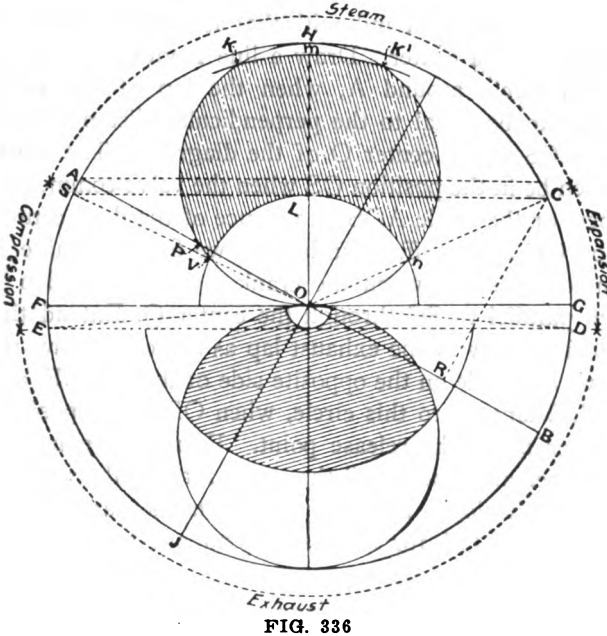

FIG. 336

THE REAULEAUX AND ZEUNER DIAGRAMS.

Figure 336 shows a combination of two diagrams, namely, those of Reauleaux and Zeuner, which coincide exactly as to the different valve movements, which may be found as follows:

The distance AB represents the travel of the valve as

well as the stroke of the engine, though in different scales, which makes no difference when the cut-off is always expressed in fractions or per cent of AB. The maximum cut-off is determined upon to be AR. Draw a perpendicular line RC from AB until it cuts the arc ACB. Next decide on a desired lead and, with that as a radius, draw an arc with A as a center. Draw a line from C tangent to the lead circle around A, when the lap of the valve is found to be equal to the perpendicular distance from the line CS to the center O of the diagram. The crank will then be in the position OS when the valve commences to open, or the angle AOS in advance of the dead center, and on OC at cut-off. Continuing, we find the valve in its middle position when the crank is on OG, which is drawn parallel to SC through the center O. Extend this line to F, and with the exhaust lap as a radius, draw the exhaust lap circle on the opposite side of the line GF, and draw DE tangent to this circle, when OD is the position of the crank at the release point. From this point the exhaust remains open until the crank reaches the position OE, when it closes, and compression takes place until it again reaches OS for admission, and one revolution is completed.

By placing the Zeuner diagram upon this, draw HJ perpendicular to FG, and with the radius OH of the eccentric circle as a diameter, draw the admission valve circle OVH*n*O, and the lap circle with the steam lap as a radius and find the intersection occurs at V, both with the circles and the previously laid down admission line OS, and the cut-off point at the intersections at *n*. On the line OH set off the width of the steam port from *L* toward H equal to L*m*, and with O*m* as radius draw the arc K*m*K. The shaded figure enclosed by the letters

VKK'*n*L represents the steam port opening during the admission period, and the width of the port opening at any desired position of the crank is found by measuring the distance radially from O between the lap and valve circles on the port line, as the case may be, on the desired crank position.

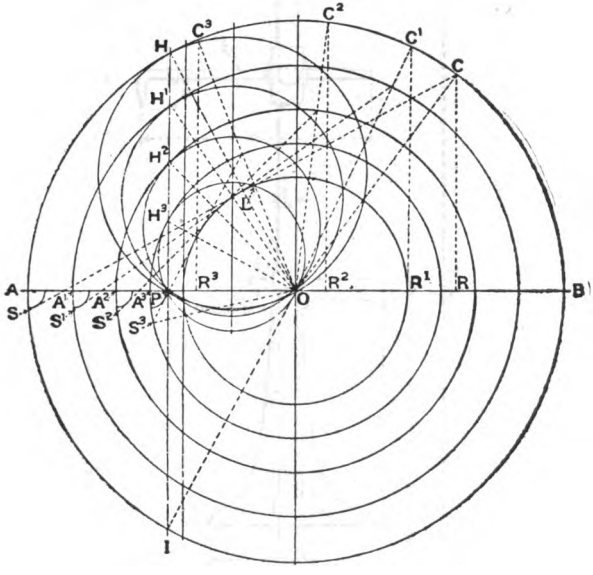

FIG. 337

The exhaust openings are determined in the same manner and are shown on opposite side of FG, where the crank passes through the arc DJE during the exhaust period, with a positive exhaust lap of the size EF. When the exhaust edge of the valve is line and line, this arc becomes GFJ, or 180°, and when a negative lap

(clearance) occurs, the duration of the exhaust period exceeds the half revolution of the crank. The various events are indicated around the eccentric circle on the figure as they take place during a complete turn of the crank.

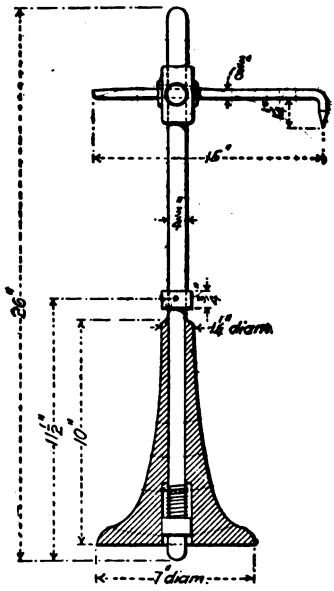

FIG. 338. A CONVENIENT GAUGE FOR SETTING THE ECCENTRIC CRANK

In Fig. 337 the eccentric and admission valve circles are shown at different cut-offs where each set of lines and circles is governed by the same explanation as those of Fig. 336, where the admission points S, S_1 S^2, S^3, correspond to the closing positions C, C^1, C^2, C^3, cut-off

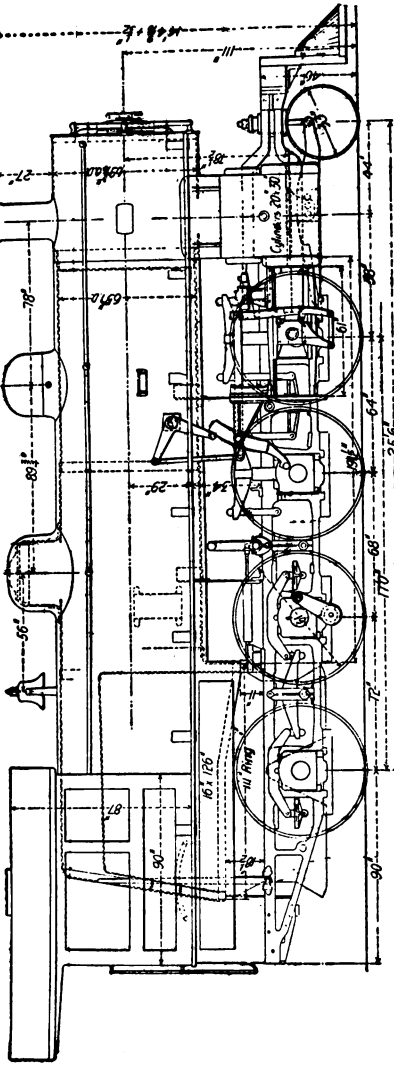

FIG. 339. WALSCHAERT VALVE GEAR—CONSOLIDATION FREIGHT LOCOMOTIVE—BOSTON & MAINE RAILROAD

FIG. 340. WALSCHAERT VALVE GEAR—CONSOLIDATION FREIGHT LOCOMOTIVE—BOSTON & MAINE RAILROAD

points R, R^1, R^2, R^3, etc. On OH we have the full travel valve circle and OL the lap or radius of the lap circle, the latter being the same for all cut-offs, as well as the lead, the radii H^1, H^2, H^3, etc., of the eccentric circles or diameters of the corresponding valve circles terminate on a line HI drawn perpendicular to AB, and at a distance from O equal to that of lap and lead.

When the reverse lever is in its center position the diameter of the valve circle falls on the line AB, and is equal to lap and lead. Continuing in back position we have the same method repeated and OI would be the full travel valve circle diameter, or the same as the eccentric radius for the valve travel. Any desired cut-off position may be laid out in the same manner as that in Fig. 336, which shows all the valve movements for a complete revolution of the axle.

The movements are in actual practice not so regular as the circles indicate, as it is impracticable to obtain the various loci in their theoretical positions; besides, we have the angularities both of the main rods and the eccentric rods to contend with, and whereby irregularities are entering in the problem that must be compensated for, as referred to in the general description. It is not to be considered that a uniform circular motion is the best, but an approximation to it works with fewer shocks or jerks, and is therefore more desirable for so high-speed an engine as a locomotive. A few advantages can be taken, however, in selecting the suspension, and various connections, so that better results can be obtained than from a true circular motion, which are principally affected by three union points and are, first, the connecting point of eccentric rod and link; second, the locus of the lifting link suspension point; and third, the relative height of

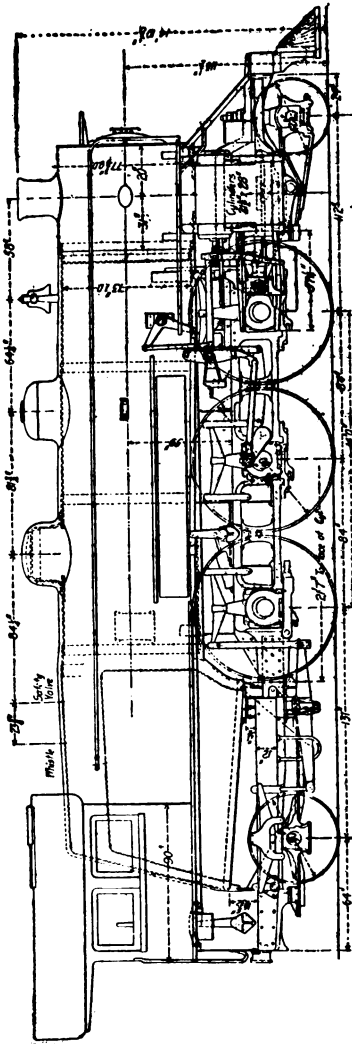

FIG. 341. WALSCHAERT VALVE GEAR—PRAIRIE TYPE PASSENGER LOCOMOTIVE—PENNSYLVANIA RAILROAD

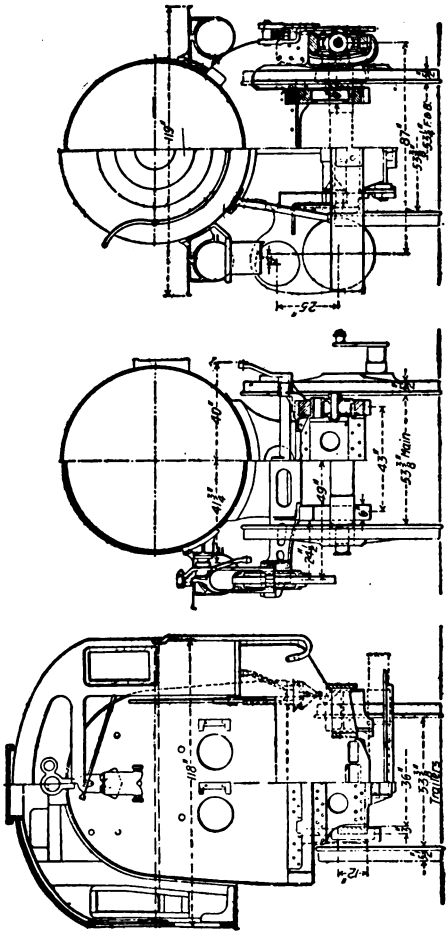

FIG. 342. PRAIRIE TYPE PASSENGER LOCOMOTIVE—PENNSYLVANIA RAILROAD—WALSCHAERT VALVE GEAR

the crosshead connection point of the union bar, to the corresponding point of the combination lever.

It is not necessary to lay out the valve diagrams except where a given cut-off per cent is wanted. This is the most convenient way to find the required lap.

WEIGHT OF WALSCHAERT GEAR.

In the matter of weights of parts, the details, in pairs, of the Walschaert gear of this engine (Lake Shore & Michigan Southern 2-8-0 type No. 912) are as follows: Crosshead arms, 60 pounds; vibrating rods, 220 pounds; eccentric rods, 220 pounds; links, 260 pounds; transmission bars, 140 pounds; valve rods, 70 pounds; eccentric cranks, 100 pounds; vibrating links, 70 pounds; valve stems, 72 pounds; and transmission bar hangers, 72 pounds. This means a total weight of 1,252 pounds for the entire valve gear of the Lake Shore engine, not including the valves. The weight of the corresponding valve gear parts of a recently constructed 20 x 28-inch, 4-6-0 engine, with Stephenson link motion, is 2,734 pounds. Such a weight, which must be moved and reversed for every revolution, imposes severe duty upon the eccentrics, and it is not surprising that they heat.

SAVING IN WEIGHT WITH WALSCHAERT VALVE GEAR.

COMPARATIVE WEIGHTS, STEPHENSON AND WALSCHAERT VALVE GEAR.

Lake Shore & Michigan Southern Locomotives.

	CLASS AND TYPE					
	CLASS D, 2-8-0		CLASS J, 2-6-2		CLASS J, 2-6-2	
	Stephenson	Walschaert	Stephenson	Walschaert	Stephenson	Walschaert
Crank pins, main	520	490	390	365	440	415
Crank pin arms	.....	100	.....	80	.....	90
Crosshead arms	.....	60	.....	50	.....	50
Eccentric	600	.....	740	.....	740	.....
Eccentric strap	800	.....	880	.....	1,120	.....
Eccentric rods	200	220	200	175	280	200
Link	280	260	260	240	300	275
Link support	.....	280	.....	250	.....	260
Link lifter	45	.....	120	.....	120	.....
Reverse shaft and arms	260	400	350	375	385	390
Rockers	260	.....	280	325	280	350
Rocker boxes	240	.....	300	300	300	325
Transmission bar	300	140	270	160	300	170
Transmission bar hanger	80	72	120	65	120	75
Transmission bar bracket	.....	.....	.....	.....	200	.....
Valve rod	80	70	130	100	100	100
Vibrating rod	.....	220	.....	180	.....	180
Vibrating link	.....	70	.....	60	.....	60
Total, lbs	3,665	2,382	3,940	2,725	4,685	2,940
Saving in weight, lbs		1,283		1,215		1,745

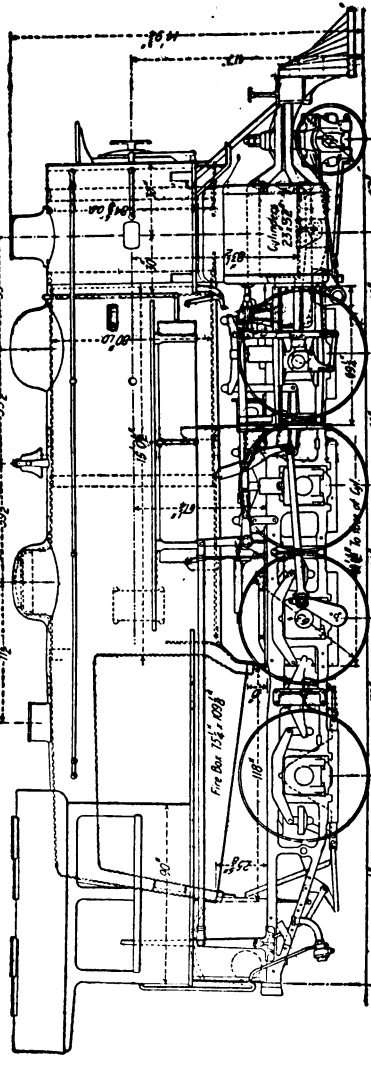
Cylinders 23"x32"
Fire Box 132"x108"
118"
252"
26'
63"
77"
69½"
69½"
18'-0"
17'-6"
17'-6"
17'-6

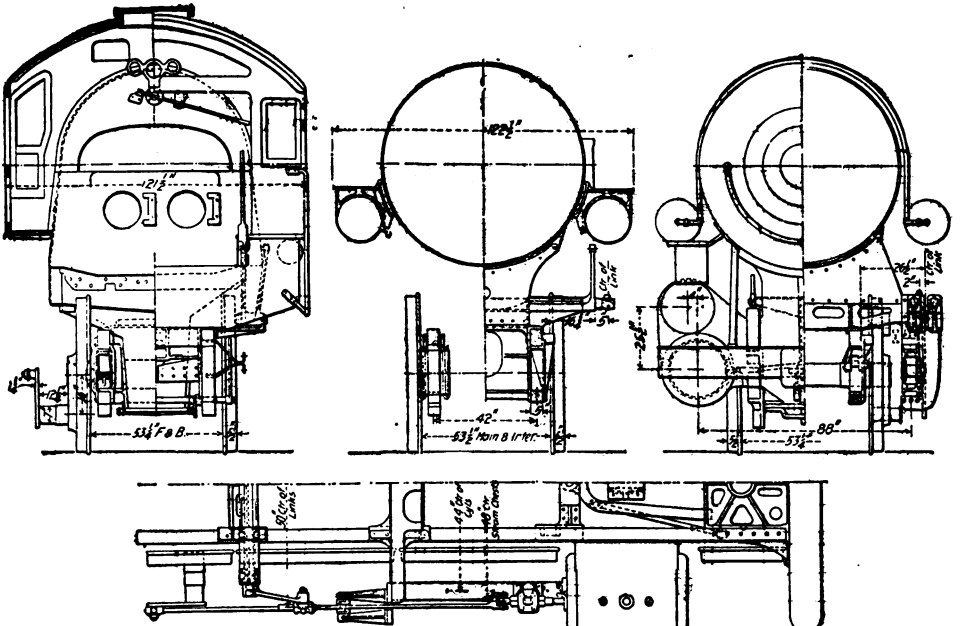

FIG. 344. WALSCHAERT VALVE GEAR—CONSOLIDATION FREIGHT LOCOMOTIVE —NEW YORK CENTRAL & HUDSON RIVER RAILROAD

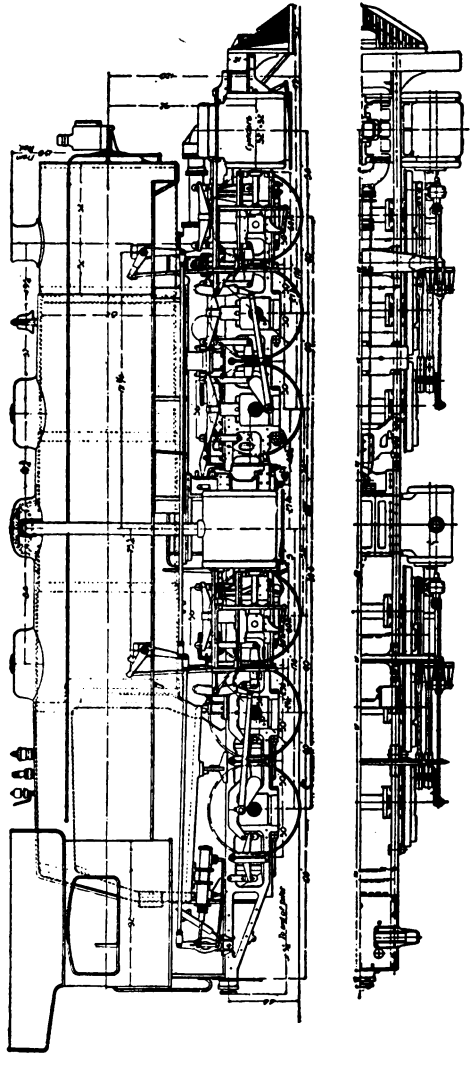

FIG. 345. WALSCHAERT VALVE GEAR—MALLET ARTICULATED COMPOUND FREIGHT LOCOMOTIVE—BALTIMORE & OHIO RAILROAD

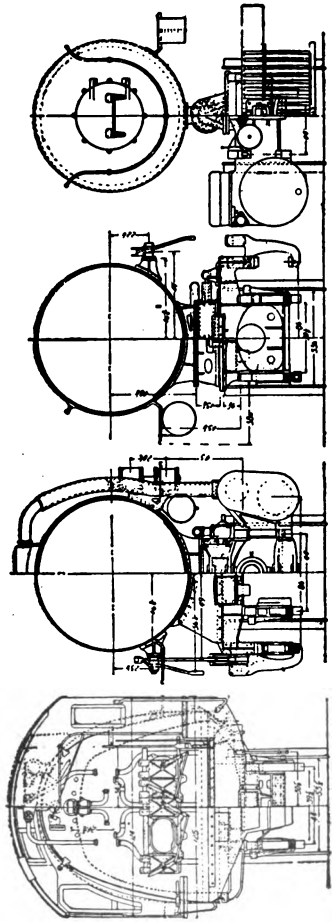

FIG. 346. MALLET ARTICULATED COMPOUND LOCOMOTIVE—BALTIMORE & OHIO RAILROAD—WALSCHAERT VALVE GEAR

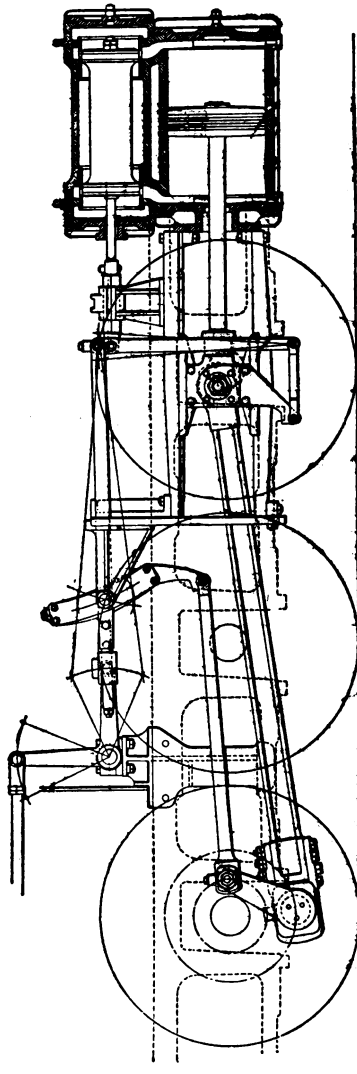

FIG. 347. WALSCHAERT VALVE GEAR AS APPLIED TO CONSOLIDATION FREIGHT LOCOMOTIVES—LAKE SHORE & MICHIGAN SOUTHERN RAILWAY

QUESTIONS

1037. From what two points is motion transmitted to the valve by the Walschaert valve gear?

1038. From what point are the two important factors of lap and lead imparted?

1039. What advantage is derived from the crosshead connection as regards lead?

1040. How may the movements of the valve as operated by this gear be diagrammatically illustrated?

1041. Mention an important feature of the Walschaert valve gear as regards adjustment.

1042. How is the combination lever of the Walschaert gear proportioned relative to the piston stroke?

1043. What kind of link is used with this valve gear, and how should it be located relative to the length of the radius bar?

1044. At what point is the radius bar attached to the combination lever for outside admission valves?

1045. At what point is this connection made for inside admission valves?

1046. Where should the fulcrum of the link be located?

1047. Where should the suspension point of the link be located?

1048. What should be the minimum length of the eccentric rod, relative to the throw of the eccentric?

1049. What rule should be observed regarding the point of connection of the eccentric rod to the link?

1050. In what position should the link be when the piston is at either end of the stroke?

1051. What is the chief point of difference between the Walschaert and the Stephenson valve motions?

1052. How are the factors of lap and lead determined?

1053. In the adjustment of the Walschaert valve gear, what position should the crank be first placed in?

1054. Before changing the length of the eccentric rod, what precaution should be observed regarding the valve rod?

1055. What is the second rule to be observed in the adjustment of this motion?

1056. Mention the third maxim for guidance in this adjustment.

1057. Give the fourth rule relative to the adjustment of this gear.

1058. According to the fifth rule, how may the lead be increased?

1059. What effect does increasing the lead have upon the cut-off?

1060. What is the sixth proposition relative to the adjustment of the Walschaert valve gear?

1061. Can the location of the link and eccentric rod be determined by formula?

1062. How then can these important points be found?

1063. How is the location for the suspension point of the lifter determined?

1064. Upon what two factors does the success of the Walschaert valve gear depend?

1065. Are the valve movements in actual practice as

regular as the circles in the Reauleaux, and Zeuner diagrams indicate?

1066. Give some reasons for this discrepancy.

1067. How may many of the irregularities due to the angularities of the main rod and eccentric rod be largely modified?

1068. How does the Walschaert valve gear compare with the Stephenson link motion as regards weight?

THE OHIO LOCOMOTIVE INJECTOR.

Type.—The Ohio Injector as shown is a simply constructed lifting injector. It lifts and forces the water with one set of tubes placed in a center line through the body of the injector.

Description.—As shown in the sectional cut are the following parts:

1—Body (back part).
2—Body (front part).
3—Delivery end connection.
4—Steam valve hub complete.
5—Steam valve and primer complete.
6—Steam nozzle.
7—Lifting tube.
8—Combining tube.
9—Delivery tube.
10—Line check valve.
11—Stop ring.
12—Overflow valve complete.
13—Water valve complete.
14—Starting lever.
15—Overflow nozzle.

The steam pipe leading from the dry steam space of the boiler is connected to the top of the injector above steam valve 5. The water or suction pipe is connected to the bottom of the injector below water valve 13. The branch or delivery pipe is coupled to the delivery end connection in front of line check valve 10, and stop ring

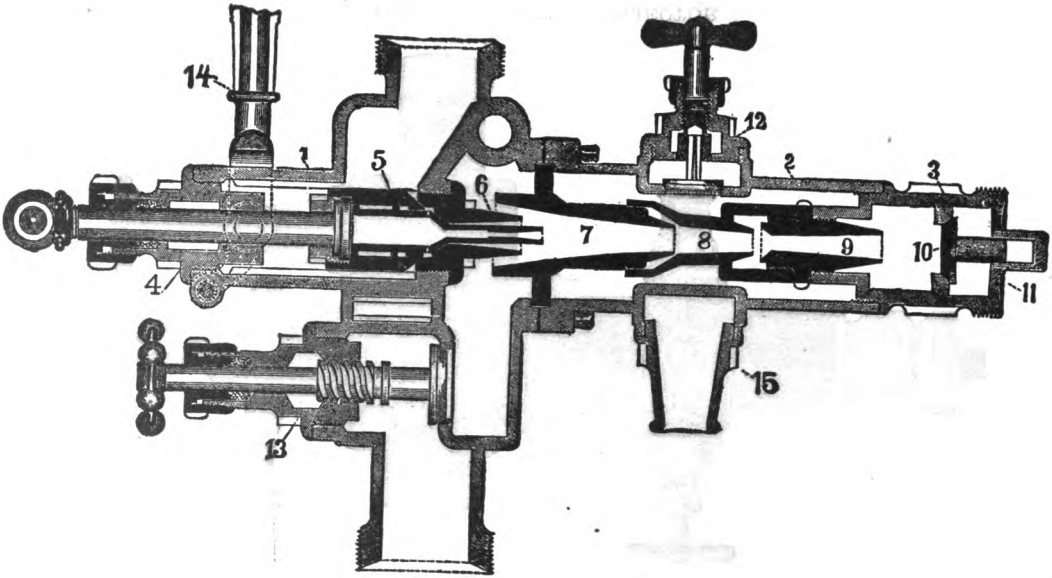

OHIO LOCOMOTIVE INJECTOR.
Sectional View.

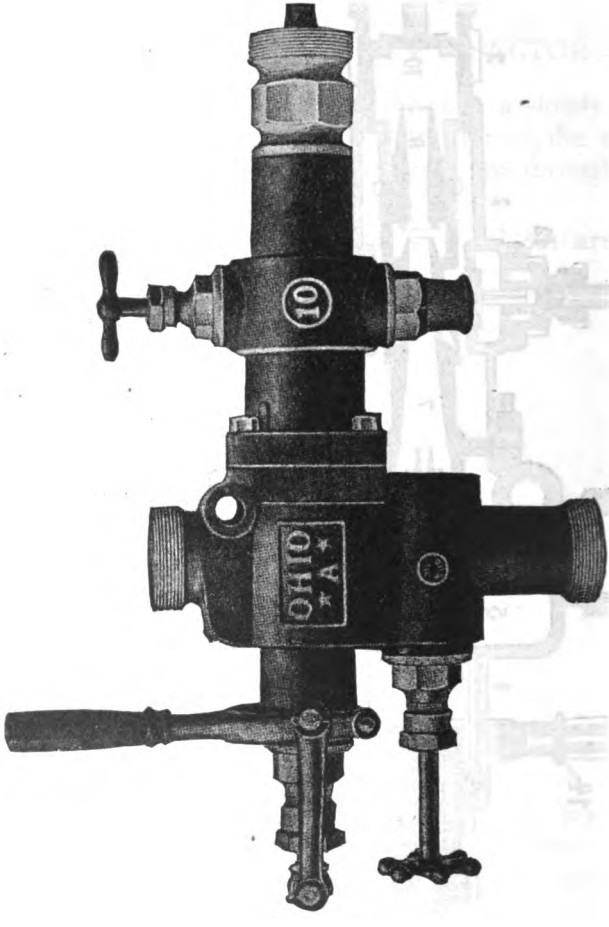

OHIO LOCOMOTIVE INJECTOR
Lever Movement

11. The overflow nozzle 15 should be fitted with a drain pipe leading to some convenient place outside of the ash pan.

To Operate—First pull the starting lever 14 back until the resistance of primer is felt. As soon as full volume of water appears at the overflow, pull starting lever back as far as it will go.

Regulate the quantity of water needed by the water valve. When operating the injector the steam pressure should be turned full into the steam pipe, as this governs the working of the injector.

When the steam valve 5 is in priming position, the inside priming nozzle is seated against the steam nozzle 6; this permits the steam to pass into the priming nozzle through the small ports, back of the seat, and to pass out through the contracted opening at the point of priming nozzle. As the steam leaves the priming nozzle it passes into the lifting tube 7; from lifting tube 7 the steam passes into combining tube 8, from which it passes through spill holes to the chamber surrounding the tubes. From this chamber the steam passes out through overflow valve 12 and nozzle 15 into the atmosphere.

The rush of steam passing from the point of the priming nozzle into lifting tube 7, causes a partial vacuum to be formed in the chamber in front of water valve 13. The partial vacuum acting in combination with the atmospheric pressure on the water in the tank causes the water to rush up into the injector body and follow the rush of steam out of the overflow to the atmosphere. The starting lever 14 is pulled full back. The full jet of steam traveling at a high velocity mingles with the water and is condensed by it; the resultant mixture then has a

velocity, and pressure greater than the boiler pressure, which causes the water to be forced into the boiler.

To use as heater: close the overflow valve 12, and pull lever 14 back until the resistance of the primer is felt, and let stand at this point. Overflow valve 12 must not be closed except when injector is to be used as a heater.

Important points in applying and operating the Ohio Injector. The pipes should be the specified sizes for each size of injector. Keep the tank valve open wide; keep all joints tight; keep hose strainers clean; keep packing in good condition.

Working pressure and capacity. The Ohio Injector works under steam pressure from 250 lbs. down to 25 pounds. The capacities are regulated according to size.

TYPE L TRIPLE VALVE.

This triple valve has the usual brake-pipe auxiliary reservoir, and brake-cylinder connections, also an additional connection for a supplementary reservoir. Fig. 348 shows a view of the type L triple valve, with the safety valve in place. In order that trains may be controlled easily and smoothly when running at either high or low speeds, and that stops may be made quickly and with the least liability of wheel sliding, the brake apparatus must provide the following essential features of operation:

A small brake-pipe reduction must give a moderate brake-cylinder pressure and a moderate but uniform retardation on the train as a whole.

It must be possible to make a heavy service reduction quickly, but without liability of quick action.

It must be possible to graduate the release as well as the application of the brakes.

To insure the ability to obtain brake applications in rapid succession, and to full power, a quick recharging of the auxiliary reservoirs is necessary. This feature also enables the engineer to handle long trains in heavy grade work with a much greater factor of safety than heretofore, and eliminates the need for retaining valves.

For high-speed trains, a high brake-cylinder pressure available for emergency applications is imperative, in order to provide a maximum braking power, when the shortest possible stop is required to save life or to avoid sudden danger.

The Westinghouse Air Brake Co. claim that they have met the above requirements by the development of the type L triple valve. This triple valve is of the quick-action, automatic, "pipeless" type, and is intended for use only in high-speed passenger service. The L valve

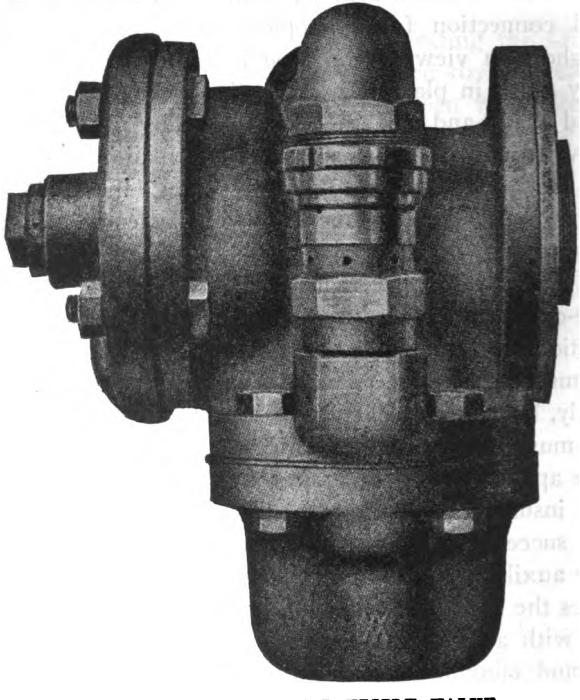

FIG. 348. THE TYPE L TRIPLE VALVE

forms a part of the LN Passenger Car Equipment, which is designed throughout to meet the service conditions outlined above. Being of the quick action type it possesses the following important features:

1st. QUICK RECHARGE (of auxiliary reservoirs), by which a rapid recharging of the brake system is secured, thus making it possible to obtain full braking power immediately after a release has been made and permitting as many applications and releases in quick succession as may be desired, without materially depleting the system.

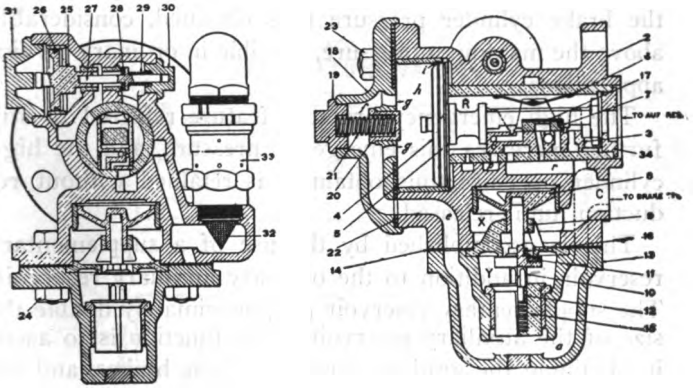

FIG. 349. THE TYPE L TRIPLE VALVE

2nd. QUICK SERVICE, by which a very quick serial *service* action of the brakes throughout the train is secured, similar to that in emergency applications, but less in degree. This makes certain the prompt and uniform application of all the brakes in the train, correspondingly increasing the rapidity and effectiveness of any given brake-pipe reduction, and thereby practically eliminating the need for the harsher emergency application, except in cases of actual danger.

3rd. GRADUATED RELEASE, which permits of partially or entirely releasing the brakes on the entire train at will.

4th. HIGH EMERGENCY CYLINDER PRESSURE, which

greatly increases the available braking power in emergency applications over the maximum obtainable with a full service reduction. With this, as with all quick-action triple valves, a portion of the air contained in the brake pipe is vented to the brake cylinder in emergency applications, thus providing for the quick serial operation of the brakes in the usual way. This, in itself increases the brake cylinder pressure thus obtained, considerably above the maximum pressure, possible in ordinary service applications.

The high emergency pressure feature referred to still further increases this emergency pressure, and the high cylinder pressure thus obtained, is retained without reduction, until released.

This is accomplished by the use of a supplementary reservoir in addition to the ordinary auxiliary reservoir. The supplementary reservoir is approximately double the size of the auxiliary reservoirs. Its function is to assist in obtaining the graduated release of the brakes, and the high emergency cylinder pressure, and the way in which this is accomplished will be explained later on. This feature makes it possible to use the equipment as a high speed brake, when carrying 90 lbs. brake pipe pressure, and obtain better results than when using 110 lbs. pressure with the old standard equipment in steam road service. Fig. 349 shows a vertical cross section of the valve, and the names of its various parts are as follows:

2, Valve Body; 3, Slide Valve; 4, Piston; 5, Piston Ring; 6, Slide Valve Spring; 7, Graduating Valve; 8, Emergency-Valve Piston; 9, Emergency-Valve Seat; 10, Emergency-Valve; 11, Rubber Seat for Emergency-Valve; 12, Check-Valve Spring; 13, Check-Valve Case; 14, Check-Valve Case Gasket; 15, Check Valve; 16,

Emergency Valve Nut; 17, Graduating-Valve Spring; 18, Cylinder Cap; 19, Graduating-Spring Nut; 20, Graduating Sleeve; 21, Graduating Spring; 22, Cylinder Cap Gas-

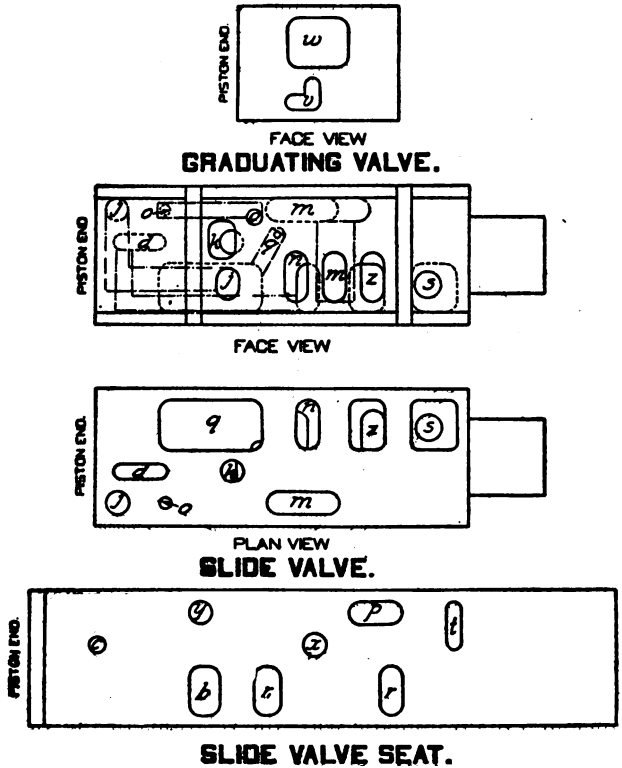

FIG. 350. GRADUATING VALVE, SLIDE VALVE, AND SLIDE-VALVE SEAT. TYPE L TRIPLE VALVE

ket; 23, Bolt and Nut for Cylinder Cap; 24, Bolt and Nut for Check-Valve Case; 25, By-Pass Piston; 26, By-Pass Piston Ring; 27, By-Pass-Valve; 28, By-Pass-Valve

Seat; 29, By-Pass-Valve Spring; 30, By-Pass Valve Cap; 31, By-Pass-Piston Cap; 32, Strainer; 33, E-7 Safety Valve.

Fig. 350 illustrates the actual arrangement of ports, and cavities, in the graduating valve, slide valve, and slide valve seat, of the type L triple valve. Owing to the impossibility of showing all of the ports and con-

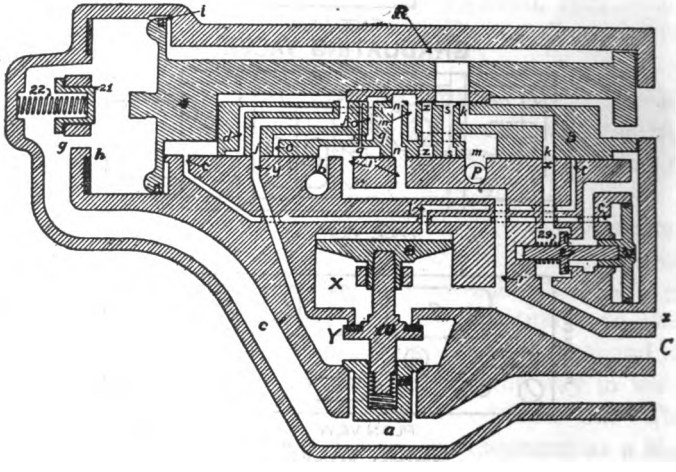

FIG. 351. FULL RELEASE AND CHARGING POSITION

necting passageways in any single illustration, figures 352, 353, 354, 355 and 356, are presented, and each shows in a diagrammatic way, the relations of the various parts to each other, for the different positions of the triple-valve piston.

The actual proportions and mechanical construction of the parts have been disregarded, in order to make the connections, and operation more intelligible to the student. The letters designating the ports and passages appear-

ing on Figures 349 to 356 inclusive, correspond throughout, but the reference numbers on Fig. 349 do not exactly correspond with those on the diagrammatic views. The various connections shown in Fig. 349, and the ports in Fig. 350 will, however, be made clear, by comparison with the diagrammatic views shown in Figures 351 to 356. Referring to Fig. 350, it will be noticed that the

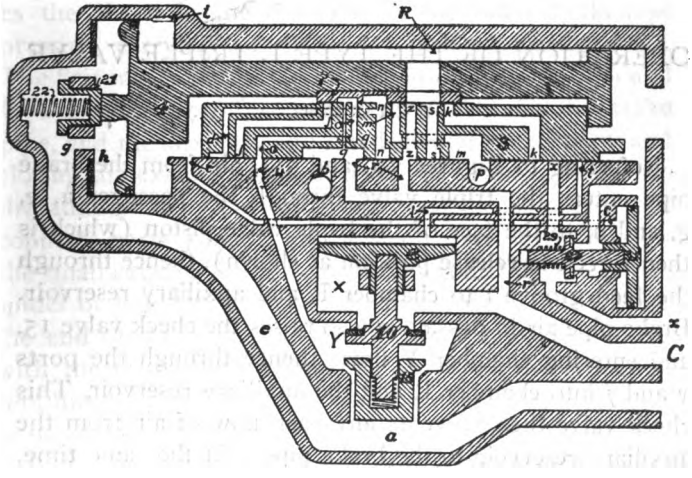

FIG. 352 QUICK-SERVICE POSITION

ports in the plan view of the slide valve seat are as follows: r leads to the brake cylinder; t, to the top of the emergency piston; p, to exhaust; x, to the supplementary reservoir; y, to the check valve case and chamber Y; b, to the safety valve, and c, to the space behind the by-pass piston.

The registration of the parts is most readily followed, and understood, by reference to, and comparison with

the diagrammatic drawings, Figures 351 to 356, in which the connections to the triple valve are as follows:

a—Brake Pipe.
x—Supplementary Reservoir.
C—Brake Cylinder.
p—Exhaust.
b—Safety Valve.
R—Auxiliary Reservoir.

OPERATION OF THE TYPE L TRIPLE VALVE.

CHARGING.

Referring to Figures 349 and 351, air from the brake pipe enters the triple valve through the passages a, e, g, and h, to the face of the triple valve piston (which is then forced to release position as shown), thence through the feed groove *i* to chamber R and auxiliary reservoir. Brake-pipe air in passage *a* also raises the check valve 15, and entering chamber Y flows thence through the ports *y* and *j* into chamber R and the auxiliary reservoir. This check valve then prevents any back flow of air from the auxiliary reservoir to the brake pipe. At the same time, port *k* registers with port *x* and the air in chamber R also flows through these ports into the supplementary reservoir. Both the auxiliary and supplementary reservoirs are thus charged at the same time and to the same pressure from the brake pipe through the two different channels already mentioned. When in this position, air from the brake cylinder, entering the triple valve at C, flows through passage *r*, port *n*, large cavity W (Fig. 350), in graduating valve, and ports *m*, and *p*, to the atmosphere, thus releasing the brakes.

SERVICE APPLICATION.

The ports of the triple valve being in release, and charging as shown in Fig. 351, a service reduction in brake-pipe pressure, reduces the pressure in chamber *h*, and on the face of the triple valve piston, below that in the auxiliary reservoir on the opposite side of the piston.

The higher auxiliary reservoir pressure therefore forces the piston in the direction of the lower brake-pipe pressure, carrying with it the attached graduating valve. The first movement of the piston closes the ports *j*, *m* and *k*, thus shutting off communication between the brake pipe, and the auxiliary and supplementary reservoirs, and closing the exhaust passage from the brake cylinder to the atmosphere. The same movement opens port *z* and connects ports *q* and *o*, in the main slide valve through the small cavity *v* in Fig. 350 in the graduating valve. The spider or lugs on the end of the piston stem, then engage the end of the main slide valve, which is carried along with the piston, and graduating valve, as the reduction continues. This brings the parts into quick service position shown in Fig. 352.

Service port *z* in the slide valve, registers with brake cylinder port *r*, in the seat, thus allowing the air in the auxiliary reservoir to flow to the brake cylinder, and apply the brakes. At the same time the quick service ports, *o* and *q*, and the small cavity *v*, in the graduating valve, connect passage *y*, leading from chamber Y in the check valve case with passage *r* leading to the brake cylinder. This allows air from the brake pipe to lift the check valve, and flow through the above mentioned ports to the brake cylinder. This constitutes the quick service action of the triple valve, in that it causes a slight, but

definite reduction in brake pipe pressure locally, at each valve. The effect of a reduction in brake-pipe pressure, made at the brake valve, is thus quickly and uniformly transmitted from car to car throughout the train. The amount of air vented from the brake pipe to the quick service ports is not great for two reasons; first, because the ports and the passage ways are small; second, because in the movement of the slide valve 3 to full

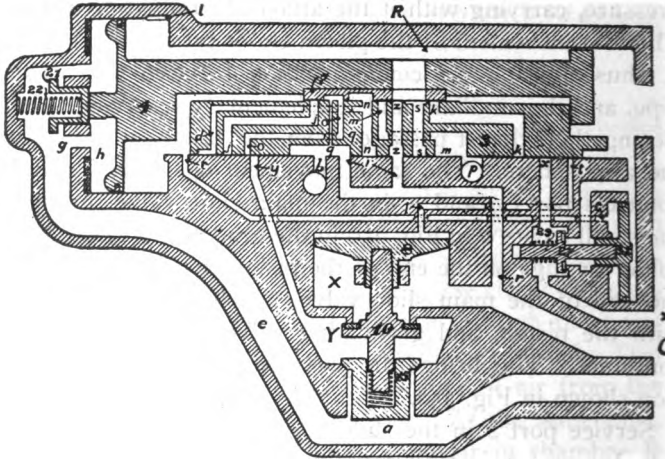

FIG. 353. FULL-SERVICE POSITION

service position, the quick service port *y* is restricted as it approaches this position and completely closed just before service port *z* is fully open, as shown in Fig. 353.

The amount of opening given the service port in any case, depends upon the rate of reduction in brake pipe pressure as compared with that of the auxiliary reservoir.

If the former is at first rapid, as compared with the

latter, which would be the case with short trains, the higher auxiliary pressure moves the piston at once to Full-Service Position, Fig. 353, thus automatically cutting out the quick-service feature where it is not needed. When in Full-Service Position, Fig. 353, the service port *z* is fully open, and the quick-service port *o* is closed. This stops the flow of air from the brake pipe to the cylinder and the quick-service action ceases. As shown in the cut, the graduating spring is compressed slightly when the piston is in full service position. In any case where the brake pipe reduction is so rapid, that the quick service feature is of no advantage, the difference of pressure on the two sides of the triple valve piston becomes at the same time sufficient to compress the graduating spring, and automatically close the quick service port as explained above. But if the brake pipe reduction is less rapid, or slow, as in the case of long trains, or moderate service reductions, a partial opening only of the service port is sufficient to preserve a balance between the pressure on the two sides of the triple valve piston. The service port connecting the auxiliary reservoir to the brake cylinder, is much larger than the quick-service port connecting the brake pipe to the brake cylinder. This serves to effectually prevent an emergency application, when only a service application is desired. It also guards against the brake-pipe reduction being continued, due to the quick-service port remaining open, after the reduction has been stopped at the brake valve.

During the time the slide valve 3 remains in Quick or Full-Service Positions, as shown in Figs. 352 and 353, the cavity *q* connects the brake-cylinder port *r* with port *b*, leading to the safety valve. This safety valve, known as the E-7 (see Figures 348 and 349), is ordina-

rily set for 62 lbs. In an emergency application, however, the safety valve is entirely cut off from the cylinder, as explained under the heading "Emergency."

LAP.

After a sufficient brake-pipe reduction has been made, the brake-valve handle is lapped, and further escape of air from the brake pipe is prevented. When the flow

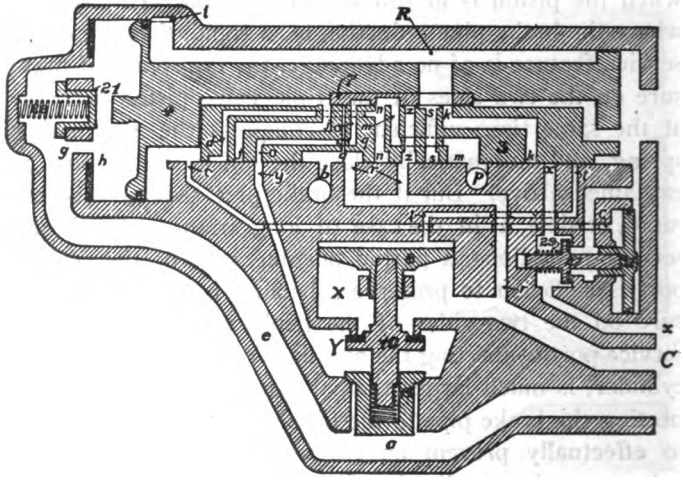

FIG. 354. SERVICE-LAP POSITION

of air from the auxiliary reservoir to the brake cylinder has reduced the pressure on the reservoir side of the triple-valve piston slightly below that remaining on the brake-pipe side, the pressure in the brake pipe, assisted by the graduating spring, will move the piston, and graduating valve to service-lap position, shown in Fig. 354. In this position all of the ports are blanked by the grad-

uating valve, and the flow of air to the brake cylinder is stopped. Further movement is prevented by the shoulder of the piston stem striking the end of the slide valve 3, as shown in the cut. The slight difference of pressure which was sufficient to move the piston and small graduating valve is unable to overcome the added resistance of the slide valve, and the parts remain in the position shown.

It should be noted that the slide valve 3 remains in Service Position, a movement of the piston and graduating valve being all that is required to lap the valve. Consequently, when in this position, only a slight reduction in brake-pipe pressure is required to again bring the piston and graduating valve into Service Position. It is evident that the exact position of the main slide valve in Lap Position depends upon whether its previous position was that of quick service (Fig. 352), or full service (Fig. 353). If the former, the lap position assumed would be that of quick-service lap (Fig. 354). If, however, the valve had moved to full service, the position would be that of full-service lap. The main piston being in service-lap position (Fig. 354), the pressure on both sides of it must be equal. If the brake-pipe pressure is increased in order to release the brakes, the higher pressure on that side of the piston causes it to move the graduating and slide valves to the extreme right to release, and recharging position, previously described (see Fig. 351). The air, which was prevented from leaving the supplementary reservoir by the former movement of the slide valve to service position, and which consequently remained at its initial pressure, while the auxiliary reservoir pressure was being reduced, now flows into the auxiliary reservoir and helps to recharge it.

During this operation, as well as while graduating

the release of the brakes, described under the next heading, the pressures on the brake pipe and auxiliary reservoir sides of the triple-valve piston are always in balance. This is important, since it insures an immediate response of the brakes to any reduction, or increase in brake-pipe pressure, irrespective of what operation may have occurred just preceding.

If the brake-valve handle is moved to Running Position and left there, the brake-pipe pressure is fully restored and the piston remains in Release Position; the brakes being thereby fully released and the auxiliary and supplementary reservoirs fully recharged.

GRADUATED RELEASE.

Suppose, however, that after the brakes have been applied, only sufficient air is permitted to flow into the brake pipe to move piston 4, with the slide, and graduating valves, to release position (Fig. 351), and the brake-valve handle is returned to lap. Then the flow of air from the supplementary reservoir, through ports x and k, to the auxiliary reservoir, continuing after the rise in brake-pipe pressure has ceased, the pressure on the auxiliary reservoir side of the triple-valve piston will be raised slightly higher than that on the brake-pipe side, and cause the piston, and its attached regulating valve, to move to the left, to graduated release position shown in Fig. 355. In this position the brake is only partially released, and a portion of the air pressure originally in the brake cylinder still remains there. In this way, the brake cylinder pressure may be released in a series of steps, or graduations, and the operation is known as grad-

uated release, and may be repeated as desired, until the brake-pipe pressure has been fully restored, and the exhaust of air from the brake cylinder completed. The amount of reduction in the brake cylinder pressure for any given graduation depends upon the amount of air pressure which has been restored in the brake pipe. The recharge of the brakes is similarly proportioned.

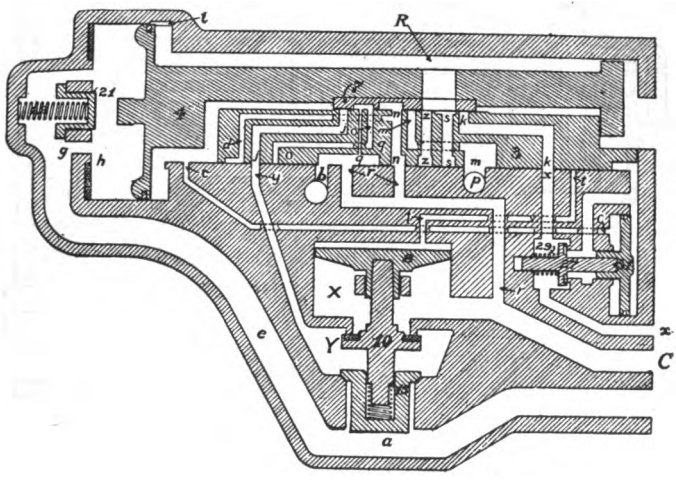

FIG. 355. GRADUATED-RELEASE-LAP POSITION

EMERGENCY.

When the brake-pipe pressure is reduced suddenly, or its reduction continues to be more rapid than that in auxiliary-reservoir pressure, the piston is forced to the extreme left and compresses the graduating spring. The parts are then in Emergency Position, as shown in Fig.

356. In this position air from the auxiliary reservoir enters the brake cylinder passage *r* through the port *s* in the main slide valve, instead of port *z* as in service application. Port *t* in the seat is also uncovered by the end of the main slide valve, thus admitting air from the auxiliary reservoir, through port *t* to the top of the emergency piston.

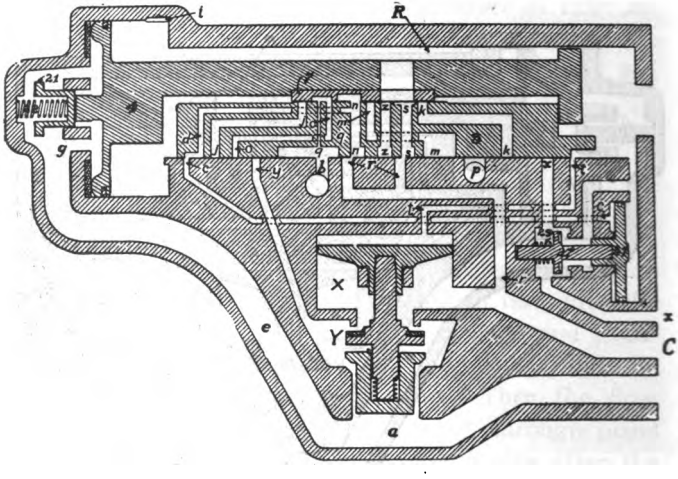

FIG. 856. EMERGENCY POSITION

The air pressure thus admitted to the top of this piston, pushes it down and forces the rubber seated emergency valve from its seat. This allows the brake pipe air in passage *a* to lift the emergency check valve, and flow through chambers *y* and *x* to the brake cylinder *C*, in the ordinary way. At the same time port *d*, in the main slide valve, registers with port *c* in the seat. This allows air from behind the by-pass piston to flow through ports *c*, *d* and *n* to *r*, and the brake cylinder. As there is no pressure

in the brake cylinder at this instant, the by-pass piston, with its attached by-pass valve is forced to the left by the auxiliary reservoir pressure acting against its opposite face. The air contained in the supplementary reservoir then flows past this valve into the passage way leading to the auxiliary reservoir. It thereby adds to the latter, the volume of the supplementary reservoir.

This gives in effect an auxiliary reservoir pressure volume approximately three times the size of the one that supplies air to the brake cylinder in a service application. Air from the supplementary reservoir continues to flow to the auxiliary reservoir until the pressures in the latter, and in the brake cylinder have risen nearly to that remaining in the supplementary reservoir. Communication between the two reservoirs is then closed by the by-pass valve returning to its seat.

This action of the triple valve in the emergency applications permits the pressure in the brake cylinder to rise to within a few pounds of maximum brake-pipe pressure, a much higher pressure being secured in emergency applications than is possible with the standard quick-action triple valve.

Further more it will be noted by reference to Fig. 356 that cavity *q* has traveled past the brake cylinder port *r*, so that the latter is no longer connected to the safety valve *b*. Hence, there is no escape of air from the brake cylinder after an emergency application of the brakes. Not only, therefore, is the emergency pressure considerably higher than that formerly secured by the use of the old standard High-Speed Brake, but it is held without diminution until the brakes are released.

INSTALLATION AND MAINTENANCE.

The triple valve is usually bolted to the pressure head of the brake cylinder, to which all the pipe connections are permanently made. In removing the valve, no pipes need to be disconnected, the loosening of the three bolts which hold it in place being all that is required. Hence, the name "Pipeless," as applied to this valve. Care should be taken in locating the valve to have it free from obstructions which would render inspection or removal difficult. It should be placed as far as possible above the general level of the piping so that no pockets are formed in the latter. If this point does not receive proper attention, trouble may be experienced in cold weather from the freezing of water in the pipes or valve itself. Under ordinary service conditions, the triple valve should be thoroughly cleaned and lubricated once in three months. The proper interval is best determined for each particular case by a careful inspection and trial. Where conditions are severe and the triple valve exposed to extremes of weather, dirt and so on, more frequent inspections will no doubt be found necessary. Where the valve is protected, and not subjected to hard usage the interval may be lengthened. The use of heavy grease or other lubricants which will "gum" and cause the valve to work stiff, or clog the ports, should be avoided. Too light a lubricant or one that does not possess sufficient "body," is not satisfactory, as it will not thoroughly lubricate the parts or last as long as necessary. Special lubricants made for this purpose will give the best results.

Before installing the triple valve all of the piping should be thoroughly hammered and blown out, in order

to loosen and remove all scale and foreign matter. This is especially important in new installations. After the piping is completed all of the joints should be thoroughly tested with soap suds, under pressure, and made air tight. Particular attention should be given to the safety valve and its strainers, in order that no dirt or scale can reach the safety valve seat and prevent it from properly closing. The by-pass piston should also receive attention to insure that it is working freely in its bushing.

Never remove the movable parts of the triple valve while it is on the car. If the valve is not working properly, or needs cleaning and oiling, take it down and replace it by a valve in good condition. All cleaning and oiling should be done at a bench, by a competent man; where the liability of damage to the internal parts of the valve is least. Any attempt to take the triple valve apart while still on the car is almost sure to result in a large percentage of valves being injured by careless handling, or dirt getting inside the pipes, or valve. If repairs are necessary the valves should be sent to the shops, where the facilities for doing the work are best.

The complete LN equipment includes a type L valve triple valve, with safety valve, a supplementary reservoir and a cut-out cock. At times, however, cars equipped with this schedule must be operated in trains with cars having the old standard equipment (P triple valves), as for instance during the transmission period when a change is being made from the old standard to the LN schedule.

During this time the cut-out cock between the triple valve and supplementary reservoir should be closed. The new valves will then work in perfect harmony with the old. In fact, if old and new equipments are to be

in service together for any considerable length of time, the cut-out cock and supplementary reservoir may be omitted entirely, as well as the safety valve, furnished with the triple valve. If the equipment is used with 70 lbs. brake-pipe pressure, no other change is necessary, and only the addition of the ordinary High-Speed Reducing Valve is required for High-Speed Service (110 lbs. brake-pipe pressure). In such cases where the conditions of service demand, there would, of course, be the same necessity for a Pressure-Retaining Valve, as with the Type P Triple Valve.

QUESTIONS

1069. What are the requirements of a brake apparatus?

1070. Wherein does the type L valve differ from the older equipments?

1071. What important feature does the type L valve possess?

1072. In what way is the high emergency pressure feature secured?

1073. What is the function of the supplementary reservoir?

1074. Describe in brief, the process of charging and release?

1075. How is service application accomplished?

1076. How is quick service brought about?

1077. Upon what does the amount of opening given the service port depend?

1078. If the reduction is so rapid that the quick service feature is no advantage, how does the graduating spring act?

1079. What is the result when the brake-pipe reduction is moderate or slow?

1080. Is there any liability of an emergency application occurring when only a service application is desired?

1081. How is this regulated by the L valve?

1082. How is the position of lap accomplished?

1083. What is the function of the graduating valve in lap position?

1084. Upon what does the position of the main slide valve depend in lap position?

1085. How is the position of graduated release regulated by the L valve?

1086. What are the advantages of graduated release?

1087. In what way is emergency position brought about?

1088. How is the volume of air available for use in the brake cylinder increased in case of emergency?

1089. Is it possible to secure a higher pressure in emergency application with this valve than it is with the standard quick action valve?

1090. Is there any escape of air from the brake cylinder after an emergency application with the L valve?

1091. Why is the L valve called a "Pipeless" valve? Describe briefly the proper location of the valve when installed.

1092. How often should it be cleaned and inspected?

1093. What should be the nature of the lubricant used on it?

1094. What should be done with the piping before installing the valve?

1095. Mention the parts that should receive particular attention.

1096. If repairs are necessary, what should be done with the valve?

1097. What does the complete LN equipment include?

1098. Can it be operated in conjunction with the old standard equipment?

1099. What changes are necessary in order to accomplish this?

1100. In case High-Speed Service (110 lbs. brake-pipe pressure) is required, what additions are necessary?

INDEX

Adiabatic, Curve 217
Expansion 246-248
Air, Composition of..... 20
Nature of 20
Quantity required for combustion of coal..... 22
Air-Brake, as an element of safety.....509
New York system.....572-573
Westinghouse system 511-513
Essential features of 781
Accelerator valve.....628, 651-653
Parts of 653
Air gauge, Duplex.....541-590
Air pump, New York duplex.....572, 573
Westinghouse eight-inch 513-518
Westinghouse nine and one-half inch.....518-523
Westinghouse eleven-inch 523-524
Air pump governor.....525-528, 586-589
American Locomotive Co.'s Schenectady cross compound 317-320
Balanced compound.....294-295
Tandem compound 297-310
American steam gauge.....389
Duplex gauge 393-394
Muffled pop valves.....399-400
Atmosphere, pressure of, at sea level.....215
Atmospheric, line 225
Automatic, air brake.....511-573
Steam chest plugs.....412

B

Ball joints 89-90
Baldwin Locomotive Co.'s balanced compound.....290
Cross compound 313
Tandem compound 311
Balanced compounds, cylinders of.....294
Distribution of steam in.....294
Uniform turning moment of.....295
Advantages claimed for.....295-296
Bed casting 115
How secured to smoke box.....116
Steam passages in.....116-117
Blower, principles of action..... 14
When to use 15
Bleeding off an air brake.....564
Boiler, the 45
Four vital organs of..... 45
Plates, expansion and contraction of..... 46
Bracing and staying.....46-53
Belpaire type 50-51
Tubes, diameter of..... 54
Material, tensile strength of.....56-57
Steel, method of testing..... 58
Specifications 57
The Vanderbilt 73-74
Modern locomotive, sectional.....78-80
Diameter of cylindrical portion..... 80
Washer, the Hancock.....384-386
Boyle, law of expanding gases.....217-241
Brewer, Pneumatic door opener.....466-470
Broken, back spring.....486
Blow-off cock 493-494
Center casting 485-486

Crank pin 488-489
Cross-head 481-489
Cylinder heads 481-482
Draw-bar 488
Driving brass 488
Driving axle 492
Driving spring or hanger.....483-484
Eccentric strap or blade.....477-489
Engine truck wheel or axle.....486
Engine truck spring hanger.....485
Equalizers 484-485
Equalizer stands 485
Frame 487-488
Guide blocks or bolts 482
Guide yoke 482
High-pressure cylinder head.....499
High-pressure piston or piston rod.....499
Low-pressure cylinder head.....499
Low-pressure piston or piston head.....499
Main rod 487
Main valve rod.....498
Metallic packing 491
Piston gland studs.....491
Piston rod 491
Reach rod 478
Rocker arm 477
Side rod on consolidation engine.....486
Side rod or strap.....481
Steam chest or cover.....490-491
Tender wheel or axle.....488
Tire on eight-wheel engine.....487
Throttle 490
Valve rod or link.....477

Valve seat 478
Valve yoke 480
Water-glass 492-493
Whistle stand 490
Bursted flue 496
Bull's-eye lubricator 404-406
B 2 H. S. equipment (New York air-brake)....627-661
B 2 S. equipment.....628

C

Carbon, heating value of one pound..... 20
Classification of locomotives, White's system..... 11
Clearance, theoretical 239
Inside 121-122
Meaning of 124, 216
Piston 216
Mechanical 124
Combined automatic and straight air-brake valve...613
Coal, composition of..... 21
Factors required for economical burning..... 22
Amount of energy in one pound of..... 30
Quantity of air required for its combustion..... 22
Compound locomotives, economy of.....260-289
Problems pertaining to.....261
Types of 261-262
Balanced 290-296
Tandem 296
Vauclain 262-282
Compression 122, 226, 238
Definition of 224
Crane, pop valve 400-401
Crown, bars and bolts..... 48
Sheet and methods of staying..... 48

Crosby, steam gauge 387
Duplex 388
Improved 389
Pop valve 393-395
Muffled pop valve 397
Cross compound 312-313
Operation working simple 323-326
To change from simple to compound.....326
Starting compound 326
To change from compound to simple.....327
Lubrication of 327
Examination of 331
Curve, Adiabatic.....217, 246
Isothermal 217
Expansion 217
Theoretical expansion 240-243
Cut-out cocks No. 1-3-6.....631
No. 5-7-9-10 632
Cut-off 120-122
How to equalize.....149-155
Cylinder cocks, Hancock pneumatic.....421-423
Low-pressure 265
High-pressure 265
Testing packing on.....303, 308, 309
Cylinder gauge 631

D

D-8 brake valve.....530-533
Dampers 332
Dead center, how to find.....135-142
Detroit lubricator 407
Triple 409
Four-feed 409-410
Operation 407-412

Diagram, indicator 204-210
Analysis of 225-254
Area of 255
Diagrams, Reauleaux and Zeuner.....757-760
Diaphragm, function of.....100
How to adjust.....101-103
Proper angle of.....103-105
Opening under 103-104
Horizontal plate of.....104-105
Disconnecting, one or both sides.....482-484
Double pressure system.....645, 650
Double pressure controller, parts of.....650
Drifting 300-329
Dry pipe 85
Material for 85-86

E

Eccentric, what it is.....223
Throw of 224
Blades 128
Straps 128
Rods, length of.....143, 147, 148
Position of, on driving axle.....133, 224
How secured to driving axle.....149
Edwards, Electric headlight.....440-448
Vertical beam 440-443
Translucent shade 441
Turbine engine 442
Dynamo 442
Method of application 444
Operation 445-448
Electric headlight 426

Emergency action of triple valve 559, 560, 600
Engine, Simple 114
Compound 114-115
Efficiency of 219
Working water 493
Engineer's brake valve.....528, 533, 590, 600
E. T. Locomotive brake equipment.....665-718
Arrangement of apparatus 671-674
Automatic operation 682-694
"Dead engine" feature.....723-724
Distributing valve 674-682
Feed valve 710-714
Independent brake valve 705-709
Manipulation 666-669
Parts of 669-671
Pump governor 715-718
Reducing valve 715
Safety valve 695-696
Type H. Automatic brake valve.....696-705
Excess pressure (N. Y. air-brake).....627
Exhaust, closure 155-156
Why it creates draught..... 14
Exhaust jet, cross-section of.....106-107
Contact with stack.....106
Efficiency of 108
Pressures in center of.....107
Exhaust nozzles 90
Bushings for 90-91
Adjustable 91-92
Automatically regulated 92
Area of 93
DeLancy 94-96
Canby 97-98

Exhaust stand, height of.....109
Partition in.....109

F

F-6 brake valve.....533
Positions of.....535-536
Fire, proper depth of, to carry..... 13
Firebox, Description of..... 45
Fireman, Duties of.....12-19
Firing, Best method of.....14-19

G

G-6 brake valve.....541-543
Gauges, American duplex.....393-394
American locomotive gauge.....389-391
Crosby duplex.....388
Crosby improved.....388-389
Crosby steam.....387
Graduating valve.....553
Stem and spring.....555
Grates, Rocking and shaking.....15-16
Water.....16-17
Square feet of surface required..... 17
When to shake..... 19

H

Hancock, Boiler washer.....423-425
Inspirator.....376
Hose strainer.....425
Pneumatic cylinder cocks.....421-423
Heat, A form of energy..... 23
Device for measuring..... 25
Its nature and cause.....23-24

Mechanical equivalent of..... 26
Sensible and latent.....27-29
Specific 26-27
Total of evaporation 30
Total in steam of 100 pounds pressure..... 30
High speed controller with lever safety valve...657-661
Horsepower, Indicated 216
Methods of calculating 220
What it represents.....216-220
Hydrogen, Nature and heating value of..... 20

I

Indicator, Connections for 208-209
Diagrams 204-211
Diagrams, analysis of 213
Inventor of 202
Principles of 202-203
Spring 204-207
Injector, By whom invented 339
Emergency method of handling.....352-355
Importance of proper handling.....337-338
Inlet valve 356
Right time and place to use.....337-338
Sellers' self-acting 351
Sizes of 348
The Giffard 338
Strainer for suction pipe.....349
The Sellers' improved.....344-347
The Metropolitan 356-363
The Monitor 336-339
The Little Giant 369
The Simplex 371-374
The Lunkenheimer 374-376

To remove tubes.....353
Why it lifts water.....339 to 341
Why it forces water into boiler.....342-344
Injector, Ohio 776-786
Inspirator, The Hancock 376-380
Connections and Operation.....380-383
Internal arrangement of.....378-379
Lifting apparatus of.....376-377
Range of 377
Regulation of 378
Type composite 382-384
Inspection of Engine.....475

J

Joints, Ball 89-90
Ring 90

K

K Triple valve.....724-745
Emergency position 743-744
Full release and charging position.....732-733
Full service position 737-738
Lap position 738-740
Manipulation 745
Parts of 728-729
Quick service position 734-736
Retarded release and charging position.....740-742
Kunkle pop valve 402-403

L

Lap, Amount of.....143-145
Inside 120-224
Meaning of 120-224
Outside 121

Lead, Amount of 128-129, 143
Cause of increased.....124-127
Negative 129
Object of 124, 224
Link, Block 125
How supported 125
Radius of 124-129
Saddle 125-128
Line, Admission 226
Atmospheric 204-225
Back pressure 205-226
Vacuum 225-229
L Triple valve.....781-800
Charging position 788
Emergency position 795-797
Full release and charging position.....786
Graduated release position 794
Installation and maintenance 798-800
Lap position 792-793
Parts of 784-786
Quick service position 787
Service application position.....789
Lubricator, What to do in case it refuses to work...496
Lubrication, Of air pumps.....524-525
Of valves and cylinders.....497-498
Lubricators 403
Detroit 407-412
New bull's-eye 404-406
New Nathan triple.....413-415
Logarithms 220
Hyperbolic 221

M

Main reservoir cock.....631
Metropolitan injector 358
How to start 359
How to regulate 361-362
Operation of 360
Pipe connections 359
Repairs to 363
To use as a heater.....362
Monitor injector 363
Flanged 364
Its capacity 367
Operation 367-369
Recent improvements in.....365
To use as a heater.....368-369

N

Nathan Lubricator, Bull's-eye 404-406
New Nathan 408
Triple sight feed 413
Netting, Area and mesh of.....111
Resistance of 111
Nitrogen, not a promoter of combustion..... 22
New plain triple valve.....564
New York Air Brake, automatic.....572
Straight 613
Automatic lap position 498, 603
Automatic and straight air valve.....613
Duplex air pump, sizes of.....573
Duplex air pump, steam end.....574-579
Duplex air pump, air end.....579-583
Duplex air gauge and connections.....590
Emergency position 600

Engineer's brake valve 590-601
Lap position 595
Oil cup, style A.....585
Style B 586
Plain triple valve.....605
Pump governors, style A.....589
Style C 586
Quick-action triple valve.....605, 615
Release position 592
Running position 593
Service application 590-591
Service graduating position 597
Straight air reducing valve.....515-517

O

Ohio locomotive injector.....776-780
Oil burning locomotives.....474a-474z
Oil dash pot 323-329
Ordinates, Definition of 223
Method of drawing 249-252
Oxygen, As a factor of combustion..... 21

P

Petticoat pipes 98, 100, 110
Diameter of 107
Importance of 100
Method of adjustment 99-100
Piston, Clearance 216
Displacement 216
Speed 216
Testing packing sleeve on tandem.....309-310
Plain triple valve, Common form.....562-563
Plates, Punched and drilled 58
Expansion and contraction of..... 58

Planimeter 256
Pneumatic cylinder cocks.....421-423
Pop valves, American.....399
Crane 400-401
Crosby 392-397
Kunkle's lock-up.....402
Principles of action 19
Why attached to a boiler..... 19
Port, Minimum opening of.....155-156
Power 217
Calculations of 248-255
Pressure, Absolute 213
Absolute back 214
Back 213
Condenser 214
Gauge 213
Initial 213
Retaining valve 565
Prindle's syphon cocks 403

R

Recharging auxiliary reservoir 549-552
Release of air brake 548-549
Retaining valve (air brake).....564
Rivets, Material for..... 58
Method of testing 59
Specifications for 59
Riveted joints, Double butt..... 62
Double lap 66
Efficiency of 59
Triple butt 64
Quadruple riveted butt.....69-70
Weakest parts of 66, 68, 70

Riveting machine 63
Rocker-Arms 145
Box 127
Shaft 127

S

Saddle plate 115
Safety valves, Common faults of 392
Requirements of 392
Sansom bell ringer 415-417
Schenectady cross compound 500-501
Sellers' injector 344-347
Operation 351-352
Simplex injector 371
Construction 373
Operation 374
Sizes and capacities of injectors 348-359
Smoke, How to prevent 15-22
Smoke box, Vacuum in 111
Stack, Diameter of 109-110
Height of 109
Straight formula for 110
Taper of 109-110
Straight air brake, How applied 563
Reducing valve (New York) 615-616
Stays, Correctly designed 72
Crowfoot 71
Defects of 49
Diagonal 53
Gusset 75
Minimum factor for 74
Stay bolts 45
Strains upon 46

Hollow 46
Tate flexible 46-47
Staying flat surfaces 71
Calculations for strength of 72
Rules for finding area of 75-77
U. S. inspector's rules for 71
Steam, Consumption 221, 223, 230
Chest 84, 115, 119
Dome 84
Distribution 310
Efficiency 218
Energy in one cubic foot 218
Gauges 387-389
How conveyed to the cylinders 84
Nature of 33
Moisture in 36
Passages 116-117
Pipes 84-89
Saturated 24-35
Superheated 35
Table of physical properties 37-41
Volume of 36
Steam gauge, Bourdon's spring 18
When to test 19
Steam anding apparatus 417-420
Steel, As a material for boilers 57
Stoker, The Victor 449-460
Supplementary reservoir 644
Straight air reducing valve 654-656
Swing check valves 363

T

Tables, Analysis of coal 21
Efficiency of triple riveted butt joints 65
Diameter and pitch of rivets for double riveted joint 61
Diameters of rivets 59
Joint efficiencies, by Dr. Thurston 62
Lloyd's rules 61
Pitch of rivets and efficiencies of joints 62
Physical properties of steam 37-40
Proportions and efficiencies of riveted joints 60
Proportions of double riveted lap and butt joints. 64
Proportions of triple riveted butt joints 65
Specific heat of various substances 27
Weight of water at different temperatures 32
Tandem compound 296-311
Arrangement of cylinders and valves 297-298
Breakdowns 301
By-pass valves 299-300
Distribution of steam in 310
Drifting 300-301
Lubrication of 301
Main objections to 296
Operation, working simple 300
Operation, working compound 300
Requires careful handling 296-297
Starting valves 298-299
Testing rules for 301-310
Tensile strength 56-57
How ascertained 57-58
What it means 56-57
Thermo-dynamic, First law of 217

Throttle, Action of.....87-88
Lever 88
Location of 86-87
Triple valve 544
New York 605-613
Functions of 544
Parts of 545-548
Plain type 545-548
Quick-action type 556-558

U

Unstayed surfaces, strength of..... 76

V

Vacuum, What it is.....214
How produced 214-215
How measured 214
Valve, D-slide, invention of.....119
Allen 185-187
Advantages of 172
Central position of 120
Functions of 119-120
How connected to stem.....127-133
Minimum travel of.....156
Over-travel of 122
Setting, what it means.....132
Piston 161-172
Semi-plug 168-171
Richardson balanced 184-185
Wilson balanced 172-183
Young rotative 188-198
Valve B 2 brake 633-644
Duplex pressure controller.....645
Emergency position 642

Graduating position 641
Parts of 643-644
Release and straight air application.....639
Release position 637
Running position 638-640
Valves, By-pass 327-328
Intercepting 313
Operating 316
Poppet 316
Relief 332
Separate exhaust 320-323
Testing high and low pressure 302
Valve gear 125-126
Indirect 127-133
Vauclain compound 262-263
Air valves 271
Cross-head 268-269
Cylinders of 263-264
Distribution of steam in.....265
Hollow valve stem 271
Operation of 272-278
Pass-by valve 270-271
Piston 269-270
Repairs on 278-282
Suggestions for running 282-284
Tractive power 285
Water relief valves 272
Victor locomotive stoker 449
Accidents to 465-466
Advantage in use of 450-451
Care of at terminals.....463-464
How to regulate 459
Operation of 456-460

W

Warning port 541
Water, Boiling point of..... 33
Composition of 31
Weight per cubic foot..... 32
Walschaert valve gear.....748-772
Adjustment of valve with.....752-753
Construction of 750-752
Laying out of 754-756
Motion of 750
Weight of 766-767
Westinghouse, Automatic air brake.....511
Air pump 513-524
Air pump governor 525-528
Automatic oil cup 583-585
D-8 brake valve 530-533
Engineer's brake valve 528-533
F-6 brake valve 541-543
G-6 brake valve 541-543
Graduating valve 553-554
New plain triple valve 564
Pressure retaining valve.....564-565
Plain triple valve 562-563
Quick-action triple valve.....556-558
Straight air brake.....563
Triple valve 544-548
Westinghouse L triple valve.....781-800
Work, Definition of 217
Negative 235
Unit of 217

V

Young rotative valve 188-198

Z

Zero, Absolute 216